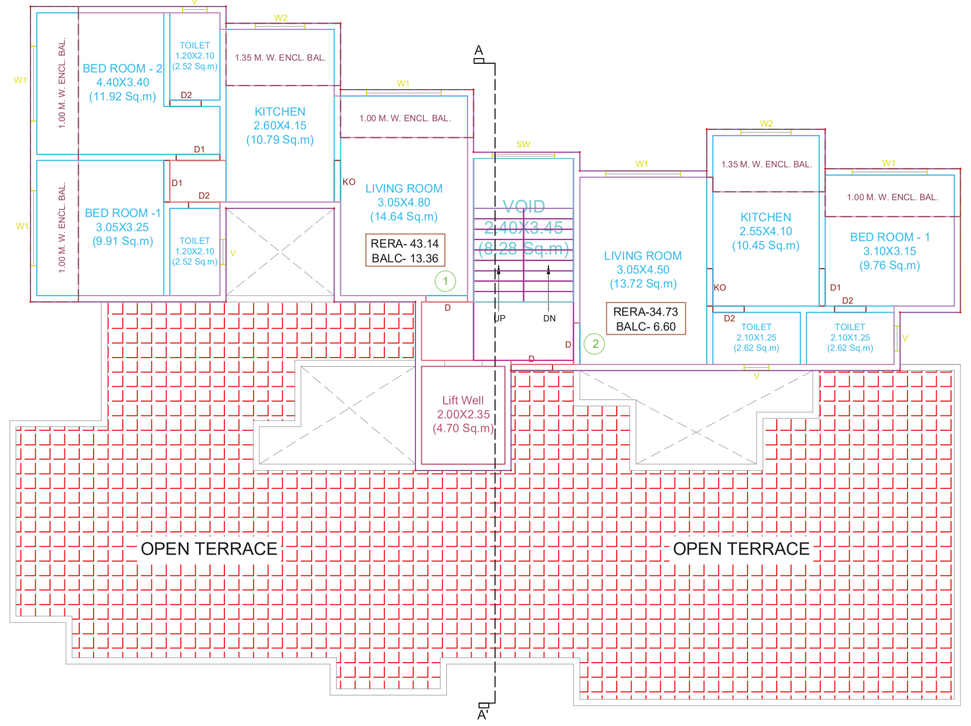

7TH FLOOR PLAN

SCALE 1:100

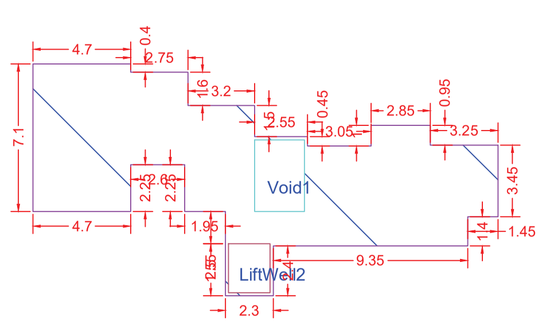

BUILT UP AREA CALCULATION FOR7TH FLOOR THE PYRAMID ONE			
AREA NAME	LENGTH	WIDTH	AreaSq.M
BLOCK	22.35	11.15	128.38
BLOCK AREA TOTAL =128.385Sq.M			
Void1	-	-	8.28
LiftWell2	-	-	4.70
TOTAL Deduction =12.985Sq.M			
Net BuiltUp Area =115.40 Sq.M			

BUILT-UP AREA CALCULATION 7TH FLOOR THE PYRAMID ONE

SCALE 1:200

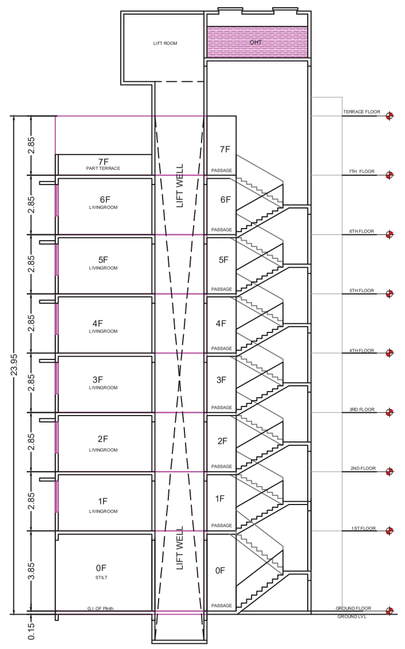

SECTION AA'

SCALE 1:100

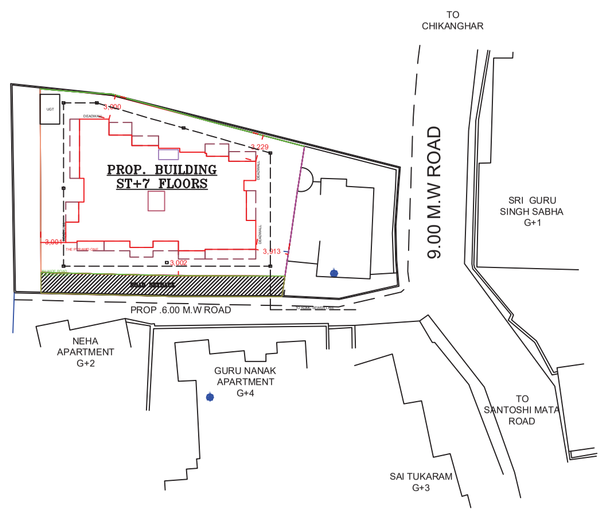

LAYOUT PLAN

SCALE 1:500

LOCATION PLAN

NTS

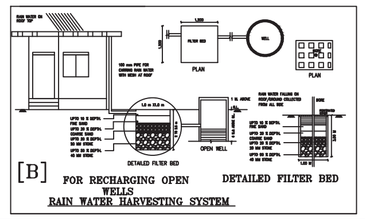

Owner details		
Owner Name	Postal Address	Contact Number
PYRAMID DEVELOPERS	Baba Hakimsingh Park, Bunglow No.03,Rambaug lane 6, Kalyan Murbad Road,Near Raj Mahal Hotel,Kalyan D.c.,Kalyan,Thane-421301 ,Maharashtra	9821115114
SAHIBSINGH JAGDEEP SINGH	BABA HAKIMSINGH PARK , BUNGLOW NO. 3 , RAMBAUG LANE 6 , KALYAN MURBAD ROAD, NEAR RAJMAHAL HOTEL, KALYAN WEST	9821115114
HASMUKH AMRITLAL SHANKLESHA	GANGOTRI APARTMENT RAMBAUG LANE NO.4, RAMBAUG KALYAN WEST	9275272727

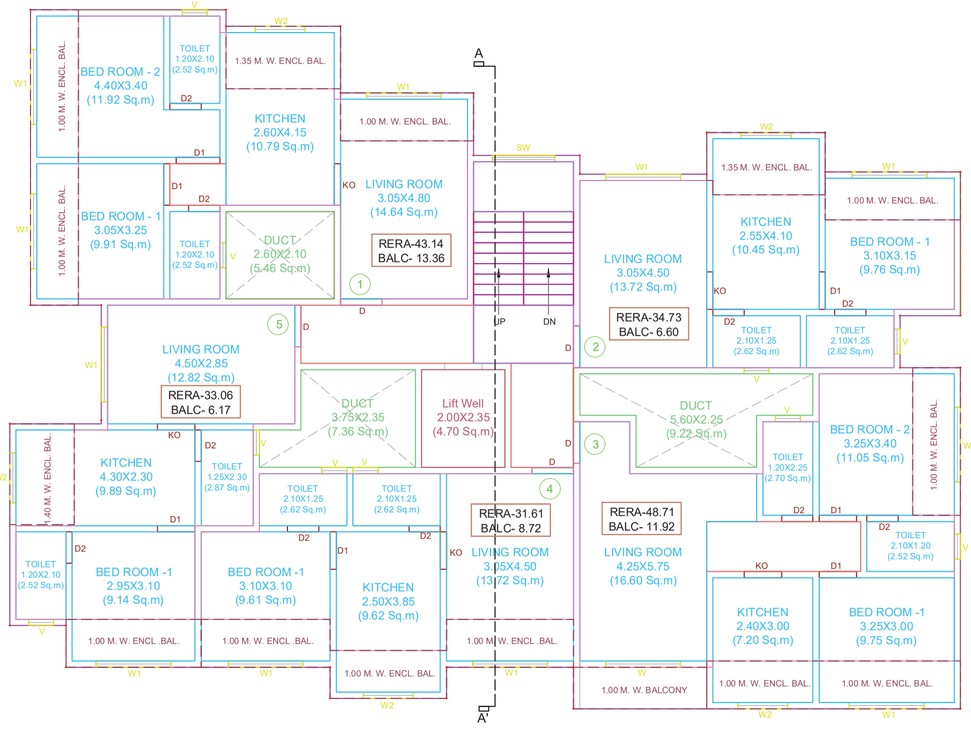

1ST-6TH FLOOR PLAN

SCALE 1:100

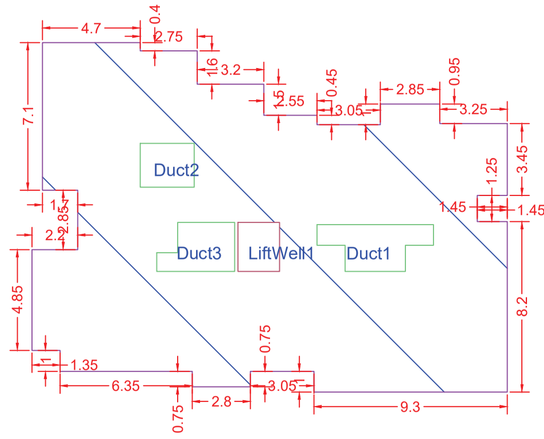

BUILT UP AREA CALCULATION FOR 1ST TO 6TH FLOOR THE PYRAMID ONE			
AREA NAME	LENGTH	WIDTH	AreaSq.M)
BLOCK	22.85	16.80	309.89
BLOCK AREA TOTAL =309.895Sq.M			
LiftWell1	-	-	4.70
Duct3	-	-	7.36
Duct2	-	-	5.46
Duct1	-	-	9.22
TOTAL Deduction =26.745Sq.M			
Net BuiltUp Area =283.15 Sq.M			

BUILT-UP AREA CALCULATION 1ST-6TH FLOOR THE PYRAMID ONE

SCALE 1:200

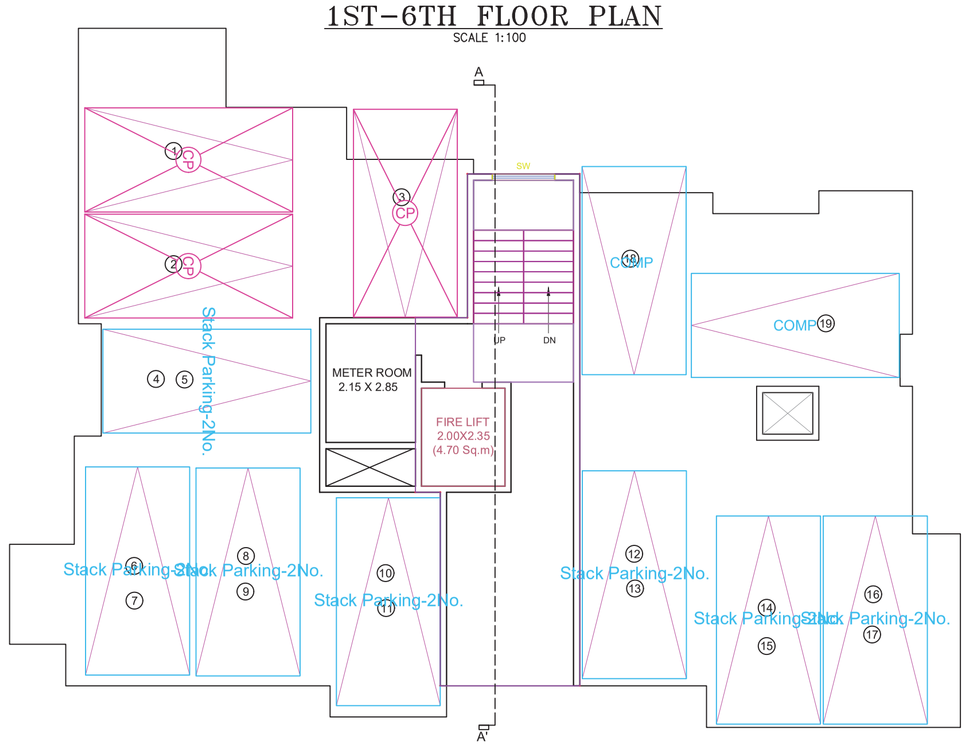

STILT FLOOR PLAN

SCALE 1:100

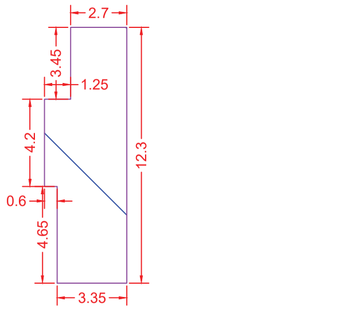

BUILT UP AREA CALCULATION FOR STILT FLOOR THE PYRAMID ONE			
AREA NAME	LENGTH	WIDTH	AreaSq.M)
BLOCK	12.30	3.95	41.48
BLOCK AREA TOTAL =41.485Sq.M			
TOTAL Deduction =0.005Sq.M			
Net BuiltUp Area =41.48 Sq.M			

BUILT-UP AREA CALCULATION STILT FLOOR THE PYRAMID ONE

SCALE 1:200

THEPYRAMIDONE															
BUILDING	FLOORS	FSI AREA						BALCONY	TERRACE	LIFT	LIFTWELL	DUCT	VENT	Other	TOTAL
		COMM.	RESI.	IND.	EDU.	INS.	MEZZ.	PROP.					SHAFT	Deduction	FSI/AREA
THE PYRAMID ONE	STILT FLOOR	0.00	0.00	0.00	0.00	0.00	0.00	0.00	0.00	0.00	0.00	0.00	0.00	0.00	0.00
THE PYRAMID ONE	1ST TO 6TH FLOOR	0.00	1859.34	0.00	0.00	0.00	0.00	335.82	0.00	0.00	28.20	132.24	0.00	0.00	1698.90
THE PYRAMID ONE	7TH FLOOR	0.00	128.38	0.00	0.00	0.00	0.00	23.91	0.00	0.00	4.70	0.00	0.00	8.28	115.40
THE PYRAMID ONE	Total	0.00	1987.72	0.00	0.00	0.00	0.00	359.73	0.00	0.00	32.90	132.24	0.00	8.28	1814.30

FSI DETAILS									
9 Index	Basic FSI (on serial no 1)	Premium FSI (on serial no 1)	TDR (on serial no 1)	Incentive FSI for green building If Applicable (on basic FSI)	Ancillary Area 60% of (2+3+4+8)	Ancillary Area 80% of (2+3+4+5)	Total	Inclusive Housing (20%) If Applicable	Drawing Value
9.1 Permissible Index	1.10	0.50	0.40	0.00	0.00	0.00	2.00	0.00	0.00
9.2 Existing Consumed Index	0.00	0.00	0.00	0.00	0.00	0.00	0.00	0.00	0.00
9.3 Balance Index to be Consume	1.10	0.50	0.40	0.00	0.00	0.00	0.00	0.00	0.00
9.4 Total Permissible PLine Area(s)	587.66	303.50	242.80	0.00	680.37	0.00	1814.33	0.00	0.00
9.5 Proposed P Line Area (Should not exceed 9.4)	587.66	303.50	242.80	0.00	680.34	0.00	1814.30	0.00	1814.30
9.6 Index Consumed	1.09	0.50	0.40	0.00	0.00	0.00	1.99	0.00	0.00

Carpet Area Table							
Building Name	Floor Name	Carpet name	Tenement No	Carpet Area	Enclosed Balcony Area	Normal Balcony Area	Total Carpet Area
THE PYRAMID ONE	7TH FLOOR	1	1	43.14	15.96	0.00	59.10
THE PYRAMID ONE	7TH FLOOR	2	1	34.73	7.95	0.00	42.68
THE PYRAMID ONE	1ST TO 6TH FLOOR	1	6	43.14	15.96	0.00	59.10
THE PYRAMID ONE	1ST TO 6TH FLOOR	2	6	34.73	7.95	0.00	42.68
THE PYRAMID ONE	1ST TO 6TH FLOOR	3	6	48.71	11.09	3.20	59.80
THE PYRAMID ONE	1ST TO 6TH FLOOR	4	6	31.61	14.02	0.00	45.63
THE PYRAMID ONE	1ST TO 6TH FLOOR	5	6	33.06	7.48	0.00	40.54

Area utilisation of Roads and Reservations							
Description of area utilisation			Area surrendered in SqM	Quatam of DR/TDR generation	Total Quatam of DR/TDR generation	Area considered for DR utilisation	Remaining area for DRC generation
Reservation type	reservation no	Name					
	-	9.00 m DP Road Widening	72.76	145.52	145.52	0.00	0.00
-	-	Total	72.76	145.52	145.52	72.76	72.76

Parking Check (Table 8B)									
Building Name	USE	TENAMENT AREA	RATIO		NO.OF Tenu/Area/Units	Required			
			car	Scooter		car	Scooter	Transport Vehicle/Ambulance/Mini Bus	
THE PYRAMID ONE	Residential	For every two tenements or each tenement having carpet area equal to or above 40 sq.m. but less than 80 sq.m.	1	2	32	16.00	32.00	-	
Total	-	-	-	-	-	16.00	32.00	-	
Visitors parking(5%)	-	-	-	-	-	0.80	1.60	0	
Total	-	-	-	-	-	16.80	33.60	0.00	

Parking Check As Per Multiplying Factor : 0.80 (Note-Parking calculate as per regulation 14.2.1.6 Parking provisions in the TOD Zone shall be at 60% of those as mentioned in UDCPR.)							
Building Name	Required			Proposed			Status
	Car/Mini Bus	Scooter	Transport Vehicle/Ambulance/Mini bus	Car/Mini Bus	Scooter	Transport Vehicle/Ambulance/Mini bus	
Total	17	10	0	17	12	0	OK
Note--8 Scooter equals to 1 Car.proposed scooter parking=4							

SCHEDULE OF OPENING:				
BLD NAME	NAME	LENGTH	HEIGHT	NOS.
THE PYRAMID ONE	W	1.80	1.20	1
THE PYRAMID ONE	W2	1.20	1.20	7
THE PYRAMID ONE	V	0.60	0.75	14
THE PYRAMID ONE	W1	1.80	1.20	16
THE PYRAMID ONE	SW	1.50	1.20	3

SCHEDULE OF OPENING:				
BLD NAME	NAME	LENGTH	HEIGHT	NOS.
THE PYRAMID ONE	d	8.00	2.10	8
THE PYRAMID ONE	D1	1.00	2.10	2
THE PYRAMID ONE	D1	1.05	2.10	2
THE PYRAMID ONE	KO	2.00	2.10	2
THE PYRAMID ONE	KO	0.90	2.10	5
THE PYRAMID ONE	D2	0.75	2.10	14
THE PYRAMID ONE	D1	0.90	2.10	6

A.	AREA STATEMENT		IN SQ.MT.
1	A)	AREA OF PLOT	
	a)	As per ownership document (7/12,cts extract)	607.00
	b)	As per measurement sheet	607.00
	c)	As per agreement	607.00
2		DEDUCTIONS FOR	
	a)	9.00 M. W. D.P.ROAD EXISTING SANCTION	72.76
	c)	ANY RESERVATIONS	0.00
		TOTAL (a+b+c)	72.76
3		BALANCE AREA OF PLOT (1 Minus 2)	534.24
4		AMMENITY SPACE IF APPLICABLE	
	a)	REQUIRED	
	b)	ADJUSTMENT OF IF ANY	
	c)	BALANCE PROPOSED	--
5		NET PLOT AREA (3-4(C))	534.24
6		RECREATIONAL OPEN SPACE (IF APPLICABLE)	--
	a)	REQUIRED	--
	b)	PROPOSED	--
7		INTERNAL ROAD AREA	--
8		PLOTABLE AREA	
9		BUILT UP AREA WITH REFERANCE TO BASIC FSI AS PER FRONT ROAD WIDTH (SR.NO: 5 X BASIC FSI) 534.24 X 1.10 = 587.66	587.66
10		ADDITION OF FSI ON PAYMENT PREMIUM	
	a)	MAXIMUM PERMISSIBLE PREMIUM FSI BASED ON ROAD WIDTH /TOD ZONE 607.00 X 0.50 = 303.50	303.50
11		IN-SITU FSI/TDR LOADING	
	a)	IN-SITU AREA AGAINST D.P. ROAD (1.0 xSR.NO:2 (a)) 72.76 X 2.00 = 145.52	145.52
	b)	IN-SITU EXISTING TDR AREA (2.00 OR 1.85 X SR. NO:4 (b) AND / or (C)	0.00
	c)	TDR AREA = 607.00X 0.4 = 242.80OUT OF THIS (242.80 - 145.52 =97.28)	97.28
	d)	TOTAL IN-SITU / TDR LOADING PROPOSED (11 (a)+(b)+(c)	242.80
12		ADDITIONAL FSI AREA UNDER CHAPTER NO.7.6.1	--
13		TOTAL ENTITLEMENT OF FSI IN THE PROPOSAL	
	a)	[9+10(b)+11(d) or 12 WHICHEVER IS APPLICABLE	1133.96
	b)	ANCILLARY AREA FSI UPTO 60% OR 80% WITH PAYMENT OF CHARGES COMMERCIAL AREA = 0.00 X 80% = 0.00 sq.mt RESIDENTIAL AREA = 1133.96 X 60% = 680.38 sq.mt TOTAL = 680.38 sq.mt	680.34
	c)	TOTAL ENTITLEMENT (a+b)	
14		MAXIMUM UTILISATION LIMIT OF FSI (BUILDING POTENTIAL) PERMISSIBLE AS PER ROAD WIDTH As per Regulation no. 6.1 or 6.2 or 6.3 or 6.4 as applicable) x 1.6 or 1.8	1814.30
15		TOTAL BUILT UP AREA IN PROPOSAL (EXCLUDING AREA AT SR. NO.17(b)	
16		PROPOSED BUILT UP AREA (AS PER P-LINE)	1814.30
17		AREA FOR INCLUSIVE HOUSING IF ANY	
	(a)	REQUIRED (20% OF SR. NO:.5)	
	(b)	PROPOSED (20% OF SR. NO:.5)	

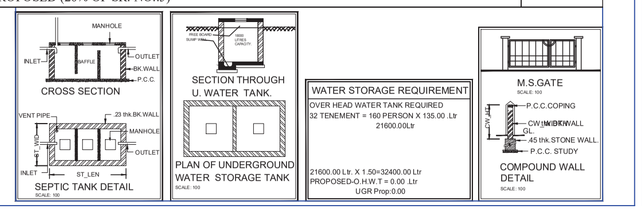

Project Details
Proposal code -KDMCC-23-20491
Zone Type - Residential Zone - (R1)
Location - Non-Congested
Name of service - Revised Building Permission
Sub service -
Cts No./Survey No. - 95
Tahsil - section 1
Mouza - Chikanghar (R1)
Prorata Co[illegible]

Signature valid
Digitally signed by Disha Prabhakar Sawant
Date: 2024.05.29 18:11:54 IST
Reason: Approved drawing
Location: Kalyan Dombivli Municipal Corporation
Project Code : KDMCC-23-20491
Application Number : RP[illegible]C202400063
Proposal Number : 2543[illegible]
Certificate Number : KDMCC/RB/2024/APL/00036

Town Planner
Date: 19/05/2024
Assistant Town Planner
Date: 19/05/2024
Assistant Engineer
Date: 19/05/2024

LEGENDS:
PLOT BOUNDARY SHOWN ORANGE
PROPOSED WORK SHOWN RED
UNDERGROUND WORK BLUE
DRAIN LINE SHOWN BROWN
ENCLOSED BAL SHOWN HATCH
TERRACE SHOWN DARK GREY
OPEN BAL SHOWN BRAWN
EXISTING SHOWN BLUE HATCHED

Proforma I : Area Statement	
1. Area of plot (minimum area of a, b, c to be considered) or subplot with sanctioned layout No. and subplot No.	607.00
(a) As per ownership document (7/12, CTS extract)	607.00
(b) as per TILR or City Survey measurement sheet	607.00
(c) as per Demarcated drawing area	672.43
LESS	
2.Area not in possession	0.00
3. Entire area (1-2)	607.00
4.Deductions for	-
(a) Proposed D.P./ D.P. Road widening Area /Service Road / Highway widening	72.76
(b) Any D.P. Reservation area	0.00
(Total a+b)	72.76
5.Balance area of plot (3-4)	534.24
6. Amenity Space	0.00
(Applicable if (1) > 20000 sqmt	-
(Required -(a) Upto 20000 sqmt - Nil	-
(b) Above 20000 sqmt - (a) + 5 % of Total area	0.00
7. Net Plot Area (5-6)	534.24
8. Recreational Open Space	-
(a) If area (6) is more than 4000 sqmt - 10 % of (6) is required.	0.00
Proposed___	0.00
(b) If area is less than 4000 sqmt -Check -	-
i) If it is full number like 1,2,125,419,etc. As per 7.12 abstract or City Survey Number - No Recreational open space is required	-
ii) If it is subdivision like 1/2 ,2/5 , 125/1 419/1 etc.then recreational open space is required.	-
(A) 10 % Subject to minimum 200 sqmt	0.00
Proposed _____	0.00
(B) Exemption to leave open space subject to availing basic F.S.I of 75 %	-
(C) Exemption to leave open space subject to payment of 10 % land value of land at (7) as per annual statement of rate.	-

Certificate of Area:
Certified that the plot under reference was surveyed by me on 2023-02-27 and the dimensions of sides etc. of plot stated onplan are as measured on site and the area so worked out tallies with the area stated in document of Ownership/ T.P. Scheme Records/Land Records Department/City Survey records.
Signature
(Name of Architect/ Licensed Engineer/ Supervisor.)

Owner's Declaration -
I/We undersigned hereby confirm that I/We would abide by plans approved by Authority / Collector. I/We would execute the structure as per approved plans. Also I/We would execute the work under supervision of proper technical person so as to ensure the quality and safety at the work site.

Owner (s) name and signature

Architect/ Licensed Engineer/ Supervisor name and signature

Job No.

Postal Address : Baba Hakimsingh Park, Bunglow No.03,Rambaug lane 6, Kalyan Murbad Road,Near Raj Mahal Hotel,Kalyan D.c.,Kalyan,Thane-421301,Maharashtra

DESCRIPTION OF PROJECT :

Type of Proposal : Residential
BUILDING ON CTS. NO./SURVEY NO.- 95/2/A & 95/2/A/1 (OLD 95/B)

SITE ADDRESS :
S.NO 95/2/A & S.NO 95/2/A/1 (OLD 95/B) CHIKANGHAR KALYAN

Name Of Architect : ANIL RAMCHANDRA NIRGUDE

LOGO	ADDRESS OF OFFICE
	OFFICE - B/101, Bindu Tower, opp.old lourds school, santoshi mata road, kalyan west

OWNERS SIGN - Verified by applicant	TECHNICAL PERSON SIGN Signature valid Digitally signed by ANIL RAMCHANDRA NIRGUDE Date: 2024.05.29 17:13:00 IST Reason: Approved drawing Location: Kalyan Dombivli Municipal Corporation Application Number : RP[illegible]C202400063 Proposal Number : 2543[illegible]
SCALE - 1:100	Date: 26/03/24
JOB NO - KDMCC-23-20491	CHECK BY - -

SUBMISSION DRAWING