EE708: Fundamentals of Data Science and Machine Intelligence
Assignment 3

Snehasish Haldar
Roll Number: 231013

Question 1

(a) Similarity Measure

Let $s(x, y)$ be a metric similarity measure on a set X such that $s(x, y) \geq 0$ for all $x, y \in X$.

Define a new function:

$$s'(x, y) = s(x, y) + a, \quad \text{where } a \geq 0.$$

We prove that $s'(x, y)$ is also a metric similarity measure.

1. Non-negativity

Since $s(x, y) \geq 0$ and $a \geq 0$,

$$s'(x, y) = s(x, y) + a \geq 0.$$

Thus, $s'(x, y)$ is non-negative.

2. Symmetry

Since $s(x, y)$ is symmetric,

$$s(x, y) = s(y, x).$$

Therefore,

$$s'(x, y) = s(x, y) + a = s(y, x) + a = s'(y, x).$$

Hence, symmetry holds.

3. Identity Property

If $s(x, y)$ satisfies the identity property, then adding a constant a does not change the ordering or structure of similarity values. Therefore, the identity condition remains preserved.

Hence, $s'(x, y)$ is also a metric similarity measure for all $a \geq 0$.

□

(b) Dissimilarity Measure

Let $d(x, y)$ be a metric dissimilarity (distance) measure on X.

Define:

$$d'(x, y) = d(x, y) + a, \quad \text{where } a \geq 0.$$

We verify the metric properties.

1. Non-negativity

Since $d(x, y) \geq 0$ and $a \geq 0$,

$$d'(x, y) = d(x, y) + a \geq 0.$$

2. Symmetry

Since $d(x, y) = d(y, x)$,

$$d'(x, y) = d(x, y) + a = d(y, x) + a = d'(y, x).$$

3. Triangle Inequality

Since $d(x, y)$ satisfies the triangle inequality,

$$d(x, z) \leq d(x, y) + d(y, z).$$

Adding a appropriately:

$$d'(x,z) = d(x,z) + a$$

$$d'(x,y) + d'(y,z) = (d(x,y) + a) + (d(y,z) + a) = d(x,y) + d(y,z) + 2a.$$

Since $a \geq 0$,

$$d(x,z) + a \leq d(x,y) + d(y,z) + 2a.$$

Thus,

$$d'(x,z) \leq d'(x,y) + d'(y,z).$$

Hence, triangle inequality holds.

4. Identity of Indiscernibles

If $d(x,y) = 0$ if and only if $x = y$, then

$$d'(x,y) = d(x,y) + a.$$

For $a > 0$,

$$d'(x,x) = a \neq 0.$$

Thus, strictly speaking, d' is a true metric only when $a = 0$. For $a > 0$, it remains a valid dissimilarity measure but not a strict metric.

□

Question 2

Prove that the Euclidean distance satisfies the triangle inequality.

Let $x, y, z \in \mathbb{R}^l$.

The Euclidean distance is defined as

$$d(x,y) = \|x - y\|_2 = \left(\sum_{i=1}^{l} |x_i - y_i|^2 \right)^{1/2}.$$

We need to prove:

$$d(x,z) \leq d(x,y) + d(y,z).$$

Observe that:

$$x - z = (x - y) + (y - z).$$

Taking Euclidean norm on both sides,

$$\|x - z\|_2 = \|(x - y) + (y - z)\|_2.$$

Using the Minkowski inequality for $p = 2$,

$$\|(x - y) + (y - z)\|_2 \leq \|x - y\|_2 + \|y - z\|_2.$$

Therefore,

$$d(x,z) \leq d(x,y) + d(y,z).$$

Hence, the Euclidean distance satisfies the triangle inequality.

□

Question 3

Determine whether $d(x, y) = |x - y|^2$ is a valid distance metric.

A function $d(x, y)$ is a metric if it satisfies:

1. Non-negativity
2. Identity of indiscernibles
3. Symmetry
4. Triangle inequality

Given:

$$d(x, y) = |x - y|^2$$

1. Non-negativity

Since a square is always non-negative,

$$|x - y|^2 \geq 0.$$

Hence, non-negativity holds.

2. Identity of indiscernibles

$$d(x, y) = 0 \iff |x - y|^2 = 0 \iff x = y.$$

Thus, this property holds.

3. Symmetry

$$d(x, y) = |x - y|^2 = |y - x|^2 = d(y, x).$$

So symmetry holds.

4. Triangle inequality

For a valid metric, we must have:

$$d(x, z) \leq d(x, y) + d(y, z).$$

That is,

$$|x - z|^2 \leq |x - y|^2 + |y - z|^2.$$

However, this is generally **not true**.

Counterexample: Let $x = 0$, $y = 1$, $z = 2$.

$$d(0, 2) = |0 - 2|^2 = 4$$

$$d(0, 1) + d(1, 2) = 1^2 + 1^2 = 2$$

Since

$$4 \nleq 2,$$

the triangle inequality fails.

Therefore, $d(x, y) = |x - y|^2$ is **not** a valid distance metric.

$\square$

Question 4

Given cluster

$$C = \{x_1, x_2, x_3, x_4, x_5, x_6, x_7, x_8\}$$

and

$$x = [6, 4]^T,$$

using Euclidean distance

$$\delta(x, v) = \sqrt{(x_1 - v_1)^2 + (x_2 - v_2)^2},$$

we compute distances from x to each point in C.

$$\delta(x, x_1) = \sqrt{(6 - 1.5)^2 + (4 - 1.5)^2} = \sqrt{26.5} = 5.148$$

$$\delta(x, x_2) = \sqrt{(6 - 2)^2 + (4 - 1)^2} = \sqrt{25} = 5$$

$$\delta(x, x_3) = \sqrt{(6 - 2.5)^2 + (4 - 1.75)^2} = \sqrt{17.3125} = 4.161$$

$$\delta(x, x_4) = \sqrt{(6 - 1.5)^2 + (4 - 2)^2} = \sqrt{24.25} = 4.925$$

$$\delta(x, x_5) = \sqrt{(6 - 3)^2 + (4 - 2)^2} = \sqrt{13} = 3.606$$

$$\delta(x, x_6) = \sqrt{(6 - 1)^2 + (4 - 3.5)^2} = \sqrt{25.25} = 5.025$$

$$\delta(x, x_7) = \sqrt{(6 - 2)^2 + (4 - 3)^2} = \sqrt{17} = 4.123$$

$$\delta(x, x_8) = \sqrt{(6 - 3.5)^2 + (4 - 3)^2} = \sqrt{7.25} = 2.693$$

Minimum distance (Single-linkage):

$$D_{\min}(x, C) = \min \delta(x, v) = 2.693$$

Maximum distance (Complete-linkage):

$$D_{\max}(x, C) = \max \delta(x, v) = 5.148$$

Average distance (Average-linkage):

$$D_{\text{avg}}(x, C) = \frac{1}{8} \sum_{i=1}^{8} \delta(x, x_i) = \frac{34.681}{8} = 4.335$$

□

Question 5

The dendrograms obtained using single-linkage and complete-linkage algorithms are shown below.

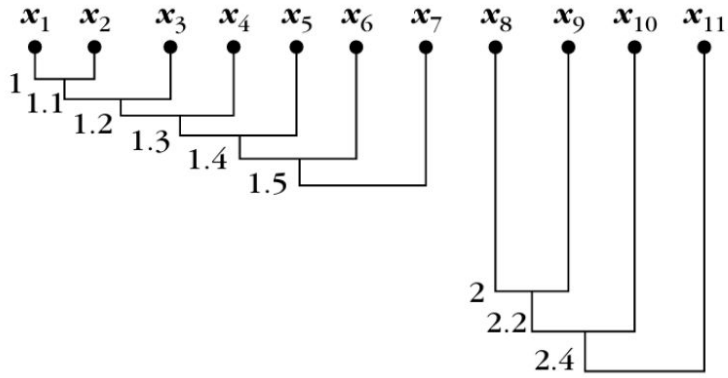

Figure 1 Dissimilarity dendrogram produced by the single link algorithm.

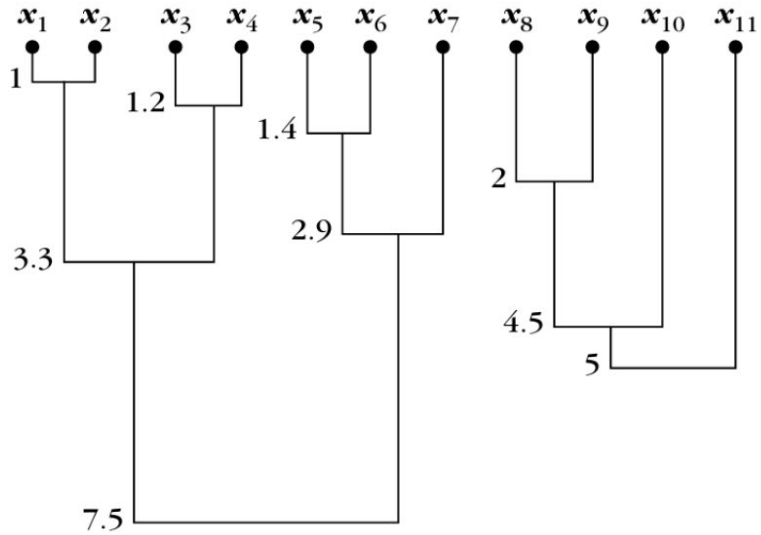

Figure 2 The dissimilarity dendrogram produced by the complete link algorithm

Single-Linkage Analysis

From the dendrogram:

- x_1 and x_2 merge at dissimilarity 1.
- The cluster progressively merges with x_3, x_4, x_5, x_6, and x_7 at 1.1, 1.2, 1.3, 1.4, and 1.5 respectively.

This produces a chain-like elongated cluster.
For the second group:

- x_8 and x_9 merge at 2.
- The cluster merges with x_{10} at 2.2.

- Then merges with x_{11} at 2.4.

Thus, single-linkage shows a chaining effect.

Complete-Linkage Analysis

From the dendrogram:

- x_1 and x_2 merge at 1.
- x_3 and x_4 merge at 1.2.
- x_5 and x_6 merge at 1.4.
- These clusters merge at 2.9 and then with x_7 at 3.3.

For the second cluster:

- x_8 and x_9 merge at 2.
- Merge with x_{10} at 4.5.
- Merge with x_{11} at 5.

The final merge occurs at 7.5, indicating strong separation between the two clusters.

Conclusion:
Single-linkage produces elongated clusters due to the chaining effect, whereas complete-linkage produces compact and well-separated clusters.

□

Question 6

For the given dissimilarity matrix

$$P = \begin{bmatrix} 0 & 4 & 9 & 6 & 5 \\ 4 & 0 & 3 & 8 & 7 \\ 9 & 3 & 0 & 3 & 2 \\ 6 & 8 & 3 & 0 & 1 \\ 5 & 7 & 2 & 1 & 0 \end{bmatrix}$$

hierarchical clustering is performed using single-link and complete-link algorithms.

Single-Linkage Clustering

Step-wise merging:

- The smallest dissimilarity is 1 between D and E.
- Next minimum is 2 between C and $\{D, E\}$.
- Next minimum is 3 between B and $\{C, D, E\}$.

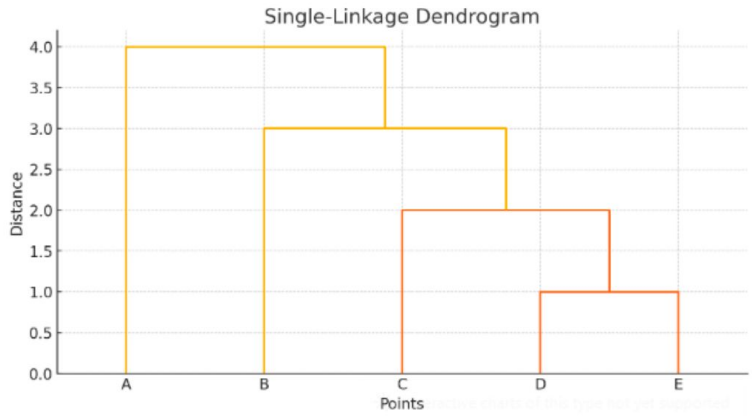

Figure 1: Single-Linkage Dendrogram

- Finally, A merges at distance 4.

Comment:
Single-linkage uses the minimum inter-cluster distance. It produces a chaining structure and results in a unique dendrogram since the minimum distances are uniquely determined.

Complete-Linkage Clustering

Complete-linkage defines cluster distance as:

$$D_{\max}(A, B) = \max_{u \in A,\, v \in B} \delta(u, v).$$

From the figure, two valid dendrograms are obtained due to ties in distances.
Common first step:

- D and E merge at distance 1.

After this, two different merging sequences are possible:
Version A:

- B and C merge at 3.
- A merges with $\{D, E\}$ at 4.
- Final merge occurs at 9.

Version B:

- C merges with $\{D, E\}$ at 3.
- A and B merge at 6.
- Final merge occurs at 9.

Two possible dendrograms:

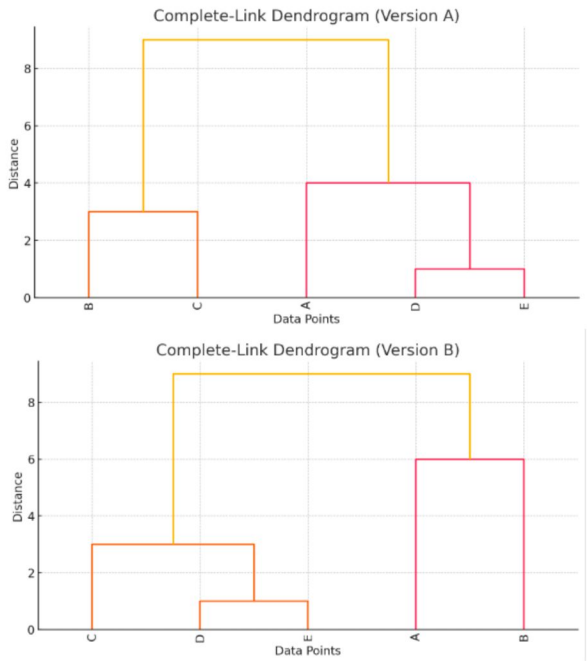

Figure 2: Complete-Linkage Dendrogram (Two Possible Versions)

Comment:

Complete-linkage considers the maximum pairwise distance between clusters. Because some distances are equal, multiple valid dendrograms can arise. Thus, unlike single-linkage, complete-linkage may not produce a unique solution.

Conclusion:

- Single-linkage gives a unique dendrogram.
- Complete-linkage may give multiple dendrograms when ties occur.
- Single-linkage favors chaining clusters, while complete-linkage produces more compact clusters.

□

Question 7

Can a dendrogram be pruned? If yes, how?

Yes, a dendrogram can be pruned in order to obtain a desired number of clusters.

A dendrogram represents hierarchical clustering where clusters are merged at different dissimilarity levels. Pruning means cutting the dendrogram at a particular height (distance threshold).

Method of Pruning

Let h be a chosen dissimilarity threshold.

- Draw a horizontal line across the dendrogram at height h.
- All clusters formed below this cut represent the final clusters.
- The number of vertical branches intersected by the cut line gives the number of clusters obtained.

Interpretation

- If we cut at a small height, many small clusters are obtained.
- If we cut at a large height, fewer large clusters are formed.

Thus, pruning allows us to convert hierarchical clustering into a flat clustering with a chosen number of clusters.

Conclusion:
A dendrogram can be pruned by selecting an appropriate distance threshold or desired number of clusters and cutting the tree horizontally at that level.

□

Question 8

How can we make k-means robust to outliers?

The standard k-means algorithm minimizes the squared Euclidean distance between data points and cluster centroids. Since it uses squared distances, it is highly sensitive to outliers, which can significantly shift the cluster means.

To make k-means robust to outliers, the following approaches can be used:

1. Use k-medoids instead of k-means

Instead of using the mean as the cluster center, use a medoid (an actual data point). Since medoids are less influenced by extreme values, this method is more robust to outliers.

2. Use trimmed k-means

In trimmed k-means, a fixed percentage of points with the largest distances from cluster centers are ignored during centroid updates. This prevents extreme points from affecting the clusters.

3. Use L_1 distance instead of squared L_2 distance

Replacing squared Euclidean distance with Manhattan distance reduces the influence of extreme values.

4. Detect and remove outliers before clustering

Outliers can be detected using statistical methods such as:

- Z-score thresholding
- IQR (Interquartile Range)
- DBSCAN or density-based filtering

After removing outliers, k-means can be applied to the cleaned dataset.

5. Use robust initialization

Careful centroid initialization (e.g., k-means++) reduces the chance that an outlier becomes an initial cluster center.

Conclusion:
Standard k-means is sensitive to outliers due to its reliance on squared Euclidean distance. Robust alternatives such as k-medoids, trimmed k-means, or preprocessing steps can significantly reduce the effect of outliers.

□

Question 9

K-means Clustering using A3_P1.csv

(a) Elbow Method

K-means clustering was performed for values of

$$k = 1 \text{ to } 15$$

and the Within-Cluster Sum of Squares (WCSS), also called inertia, was computed for each value of k.

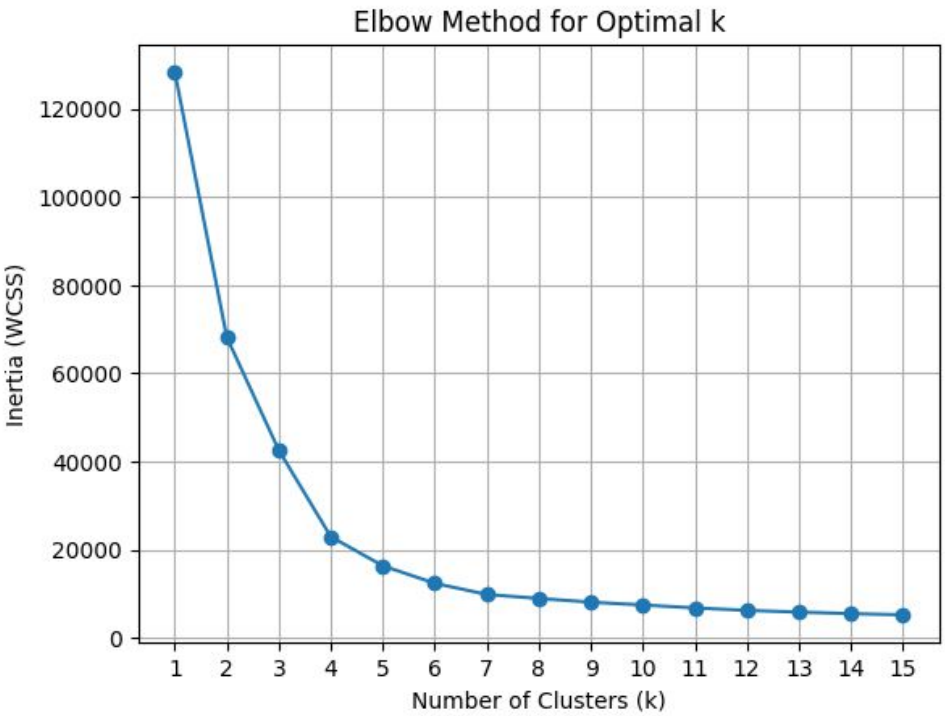

Figure 3: Elbow Method: WCSS vs Number of Clusters

From the above plot, we observe that the WCSS decreases sharply from $k = 1$ to $k = 4$. After $k = 4$, the decrease in WCSS becomes gradual and almost linear.

(b) Optimal Number of Clusters

The optimal number of clusters is determined by identifying the "elbow point", which is the value of k where the rate of decrease in WCSS significantly slows down.

From the elbow plot, the bend clearly occurs at:

$$\boxed{k = 4}$$

Reason for choosing $k = 4$:

- There is a large reduction in WCSS from $k = 1$ to $k = 4$.
- After $k = 4$, additional clusters result in only marginal improvement in WCSS.
- The curve starts flattening after $k = 4$, indicating diminishing returns.

Hence, the optimal number of clusters for this dataset is:

$$k^* = 4$$

(c) Final Clustering Result

K-means clustering was performed using the optimal number of clusters:

$$k = 4$$

The clustering result is shown below.

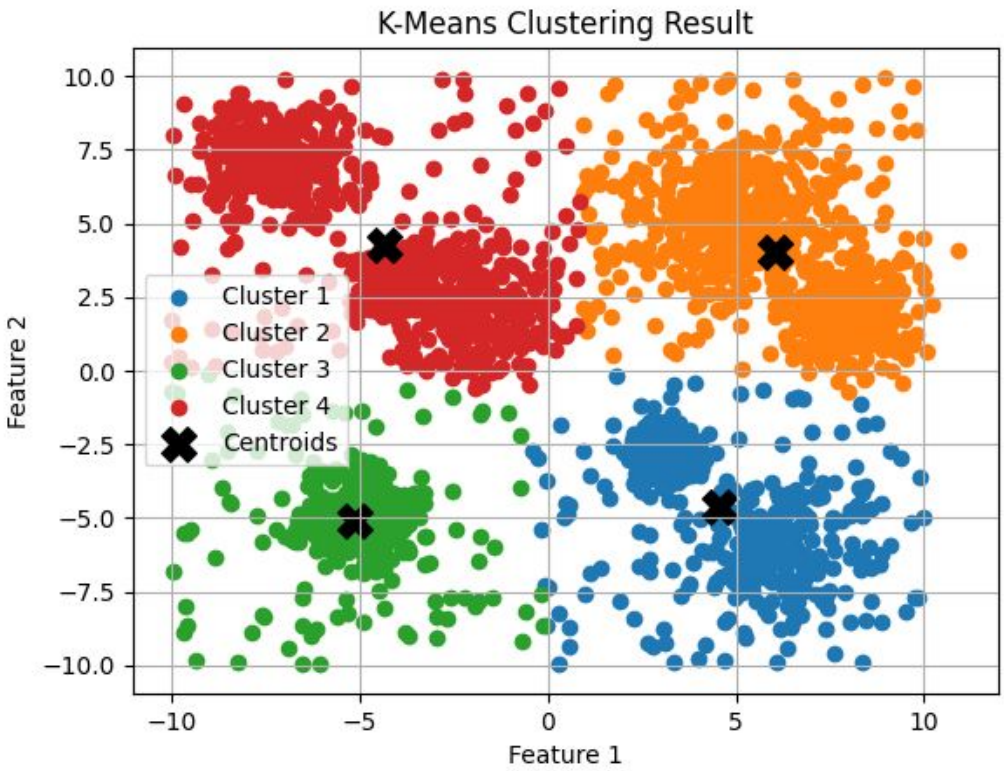

Figure 4: K-means clustering result for $k = 4$ with centroids marked by black crosses

Observations:

- The dataset is partitioned into four distinct clusters.
- Each cluster is represented using a different color.
- The centroids are marked using black crosses.
- The clusters are well-separated in the feature space, indicating that $k = 4$ is an appropriate choice.

Conclusion:

Using the Elbow method, the optimal number of clusters was determined as $k = 4$. The final clustering shows clearly separated and compact clusters, confirming the validity of the selected value.

□

Question 10

Hierarchical Clustering using A3_P2.csv

Bottom-up (agglomerative) hierarchical clustering was implemented from scratch using Euclidean distance as the dissimilarity measure.

The distance between two clusters was computed using:

- Single-linkage:

$$D_{\min}(A, B) = \min_{u \in A, v \in B} \delta(u, v)$$

- Average-linkage:

$$D_{\text{avg}}(A, B) = \frac{1}{|A||B|} \sum_{u \in A} \sum_{v \in B} \delta(u, v)$$

- Complete-linkage:

$$D_{\max}(A, B) = \max_{u \in A, v \in B} \delta(u, v)$$

(a) Single-Linkage Dendrogram

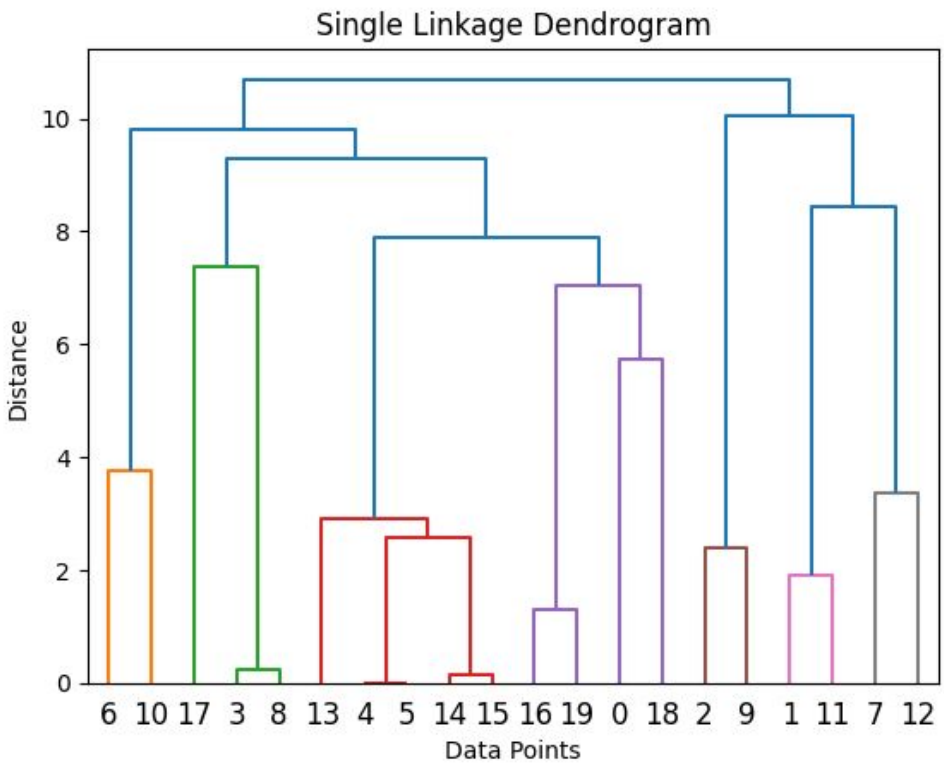

Figure 5: Single-Linkage Dendrogram

Observation:

Single-linkage merges clusters based on the minimum pairwise distance. It tends to produce chaining effects where clusters grow by linking nearest neighbors.

(b) Complete-Linkage Dendrogram

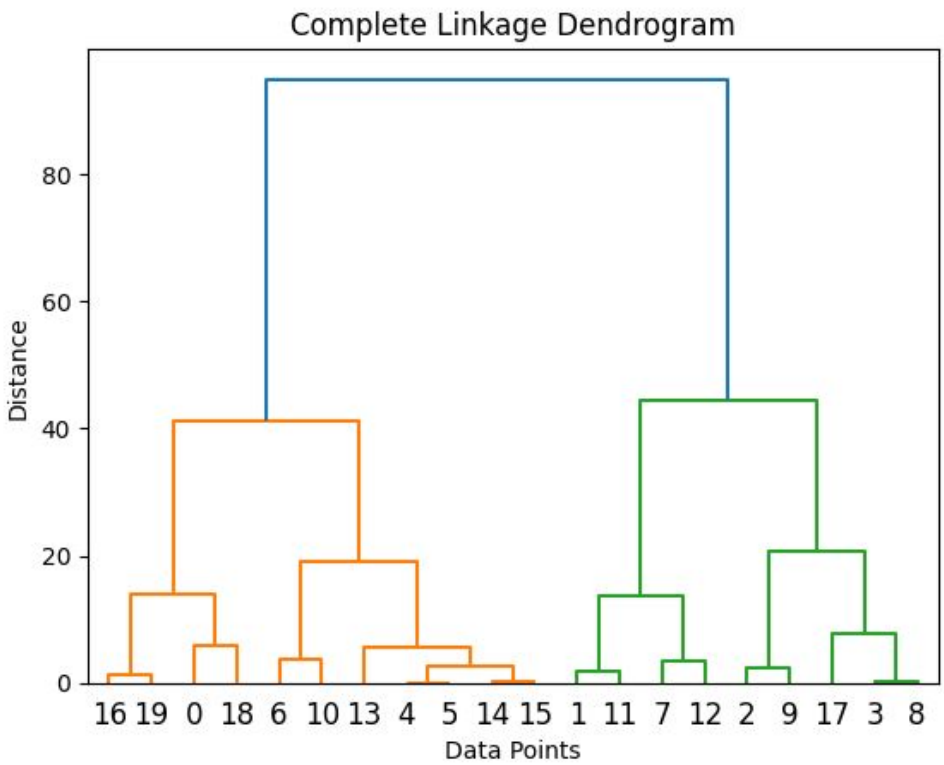

Figure 6: Complete-Linkage Dendrogram

Observation:

Complete-linkage considers the maximum pairwise distance between clusters. It produces compact and well-separated clusters.

(c) Average-Linkage Dendrogram

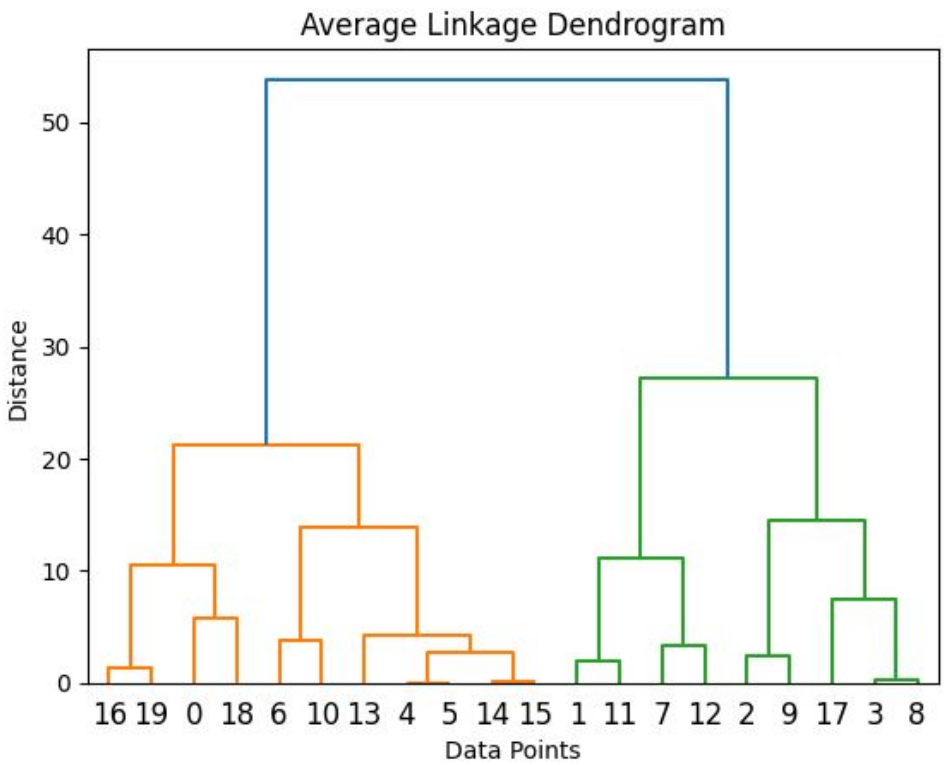

Figure 7: Average-Linkage Dendrogram

Observation:

Average-linkage uses the mean pairwise distance between clusters. It provides a balance between single-link and complete-link, reducing chaining while not being overly strict.

Conclusion:

- Single-linkage favors elongated clusters.
- Complete-linkage produces compact clusters.
- Average-linkage provides a compromise between the two.

□