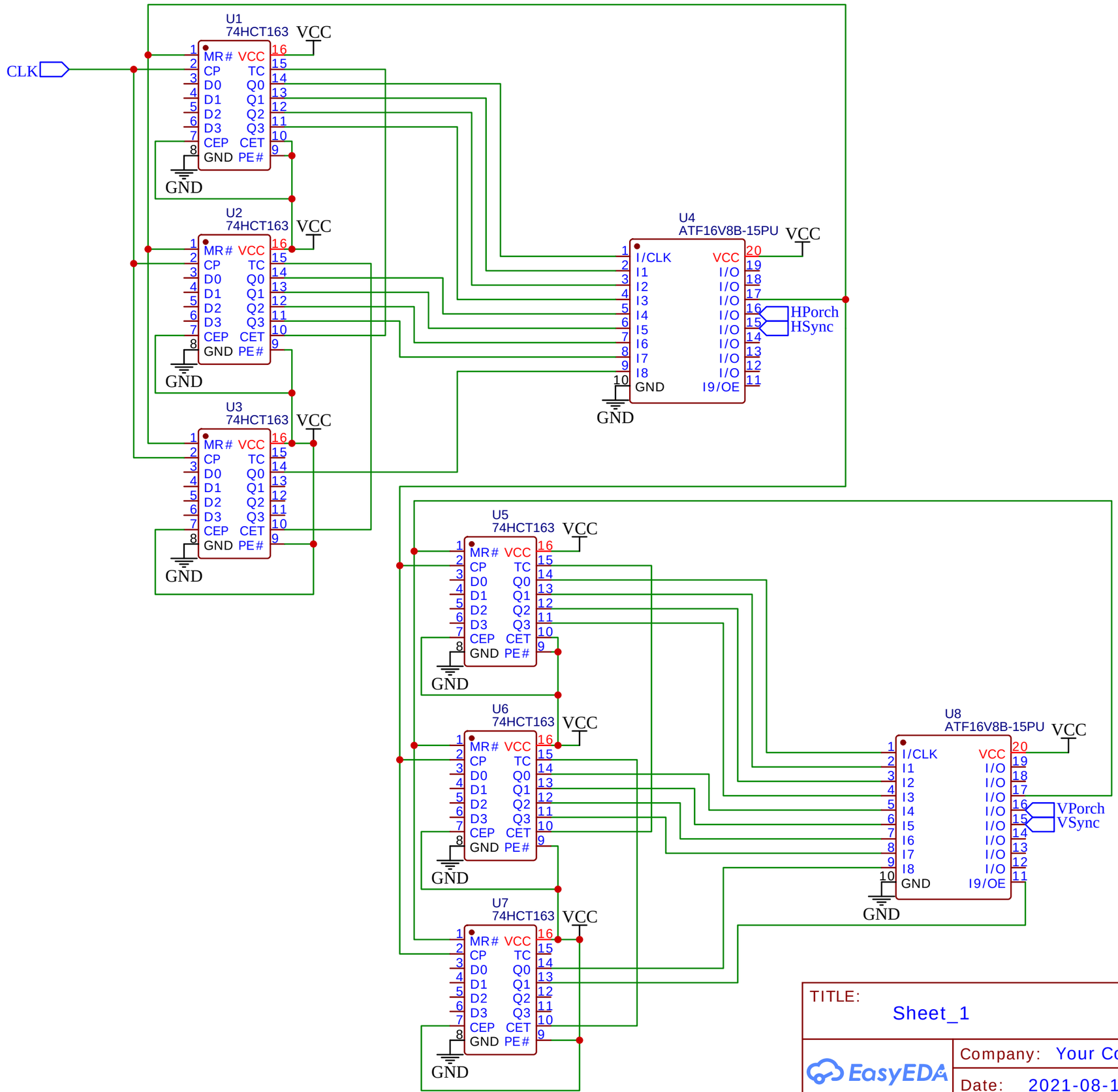

TITLE: Sheet_1		REV: 1.0
EasyEDA	Company: Your Company	Sheet: 1/1
	Date: 2021-08-18 Drawn By: Ackfee	