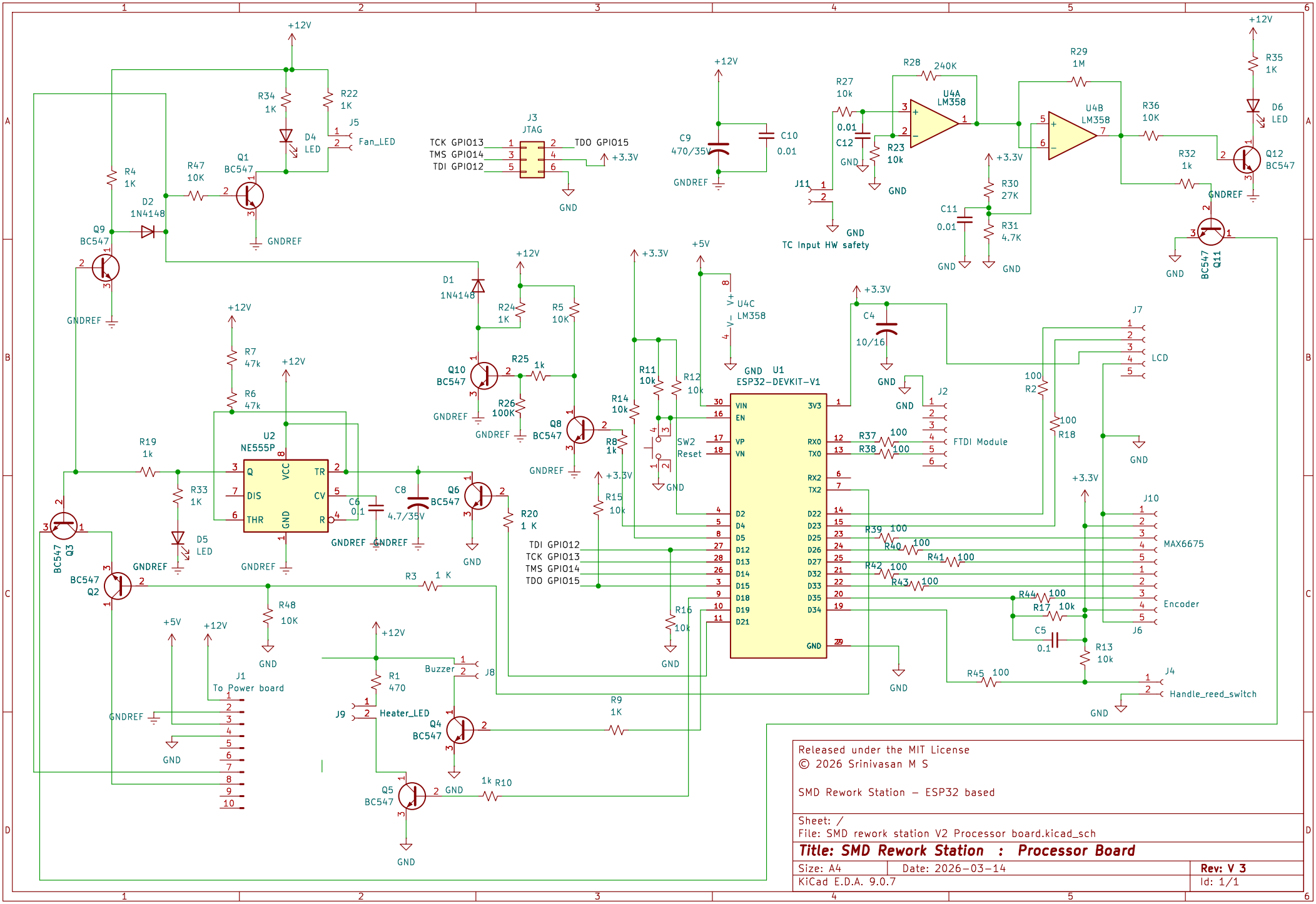

Released under the MIT License
© 2026 Srinivasan M S

SMD Rework Station – ESP32 based

Sheet: /
File: SMD rework station V2 Processor board.kicad_sch

Title: SMD Rework Station : Processor Board

Size: A4	Date: 2026-03-14	Rev: V 3
KiCad E.D.A. 9.0.7		Id: 1/1