Digital Systems

Lecture 11

The Interrupt Mechanism

Mark van der Wilk

Hilary Term 2025

University of Oxford
Department of Computer Science

Following the course of past years by Mike Spivey

Last Lecture...

We left off with the question: How does the interrupt know

Table with all interrupt addresses

vectors part of the rom, all the way at the bottom of the address space

? What *actually* happens on an interrupt?

- Last lecture, we showed how to program an interrupt in a high-level language.
- … this course is about you being able to understand every detail so you can *actually build* a computer.
- So we'll need to dive deeper:
  - What does hardware actually do on an interrupt?
  - What does the hardware do to the *state* of the CPU on an interrupt?

What additional tasks must subroutines do?

- An interrupt looks like a subroutine, inserted at an arbitrary point.
- Interrupt *handlers* can be normal subroutines.

```c
int prime(int n) {
    int k = 2;

    while (k * k <= n) {
        if (n % k == 0) return 0;
        poll_uart();
        k++;
    }

    return 1;
}
```

```c
void poll_uart(void) {
    if (UART_TXDRDY) {
        // send another char
    }
}
```

Satisfying the Subroutine Convention in Interrupts

- Remember the subroutine convention.
  What does the interrupt handler expect?
- What is different about an interrupt cf a normal subroutine?
  What does the interrupted code assume?
- Must also store `psr`, `pc`, `lr`, `r12`, `r0 - r3`!

Satisfying the Subroutine Convention in Interrupts

```
int prime(int n) {
    int k = 2;

    while (k * k <= n) {
        if (n % k == 0) return 0;
        k = ... k+1;
    }

    return 1;
}
```

Interrupts must save the processor state

```
void uart_handler(void) {
    if (UART_TXDRDY) {
        // send another char
    }
}
```

Interrupt handlers can be ordinary subroutines

Satisfying the Subroutine Convention in Interrupts

- Must restore `psr` on returning from the interrupt.
  Code doesn't know that `psr` can be overwritten, as for normal subroutine calls.
- Must satisfy rest of calling convention (e.g. handler can use `r0 - r3`).

Hardware Interrupt Process

Exception / interrupt frame. State is same as after normal subroutine call.

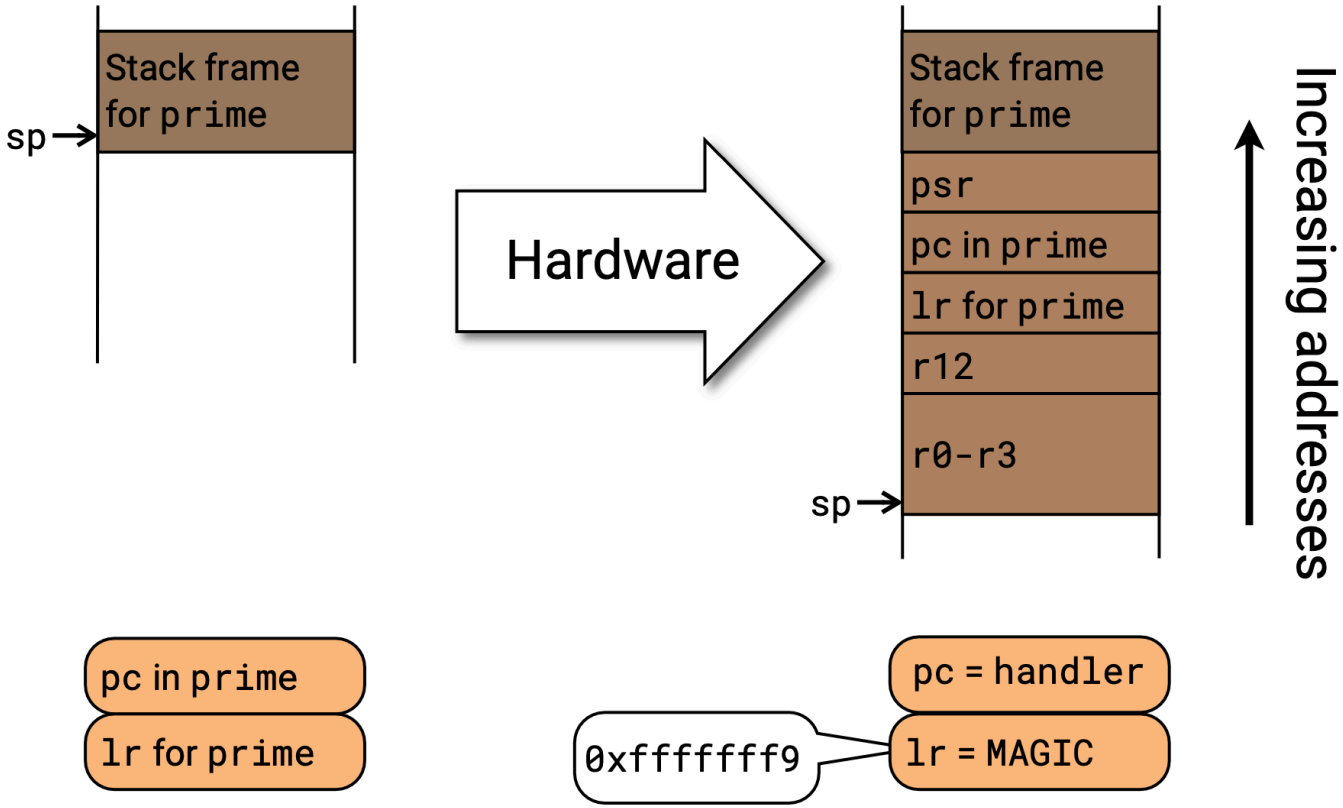

Entering Handler (that can call subroutines)

Can push additional registers in the usual way.

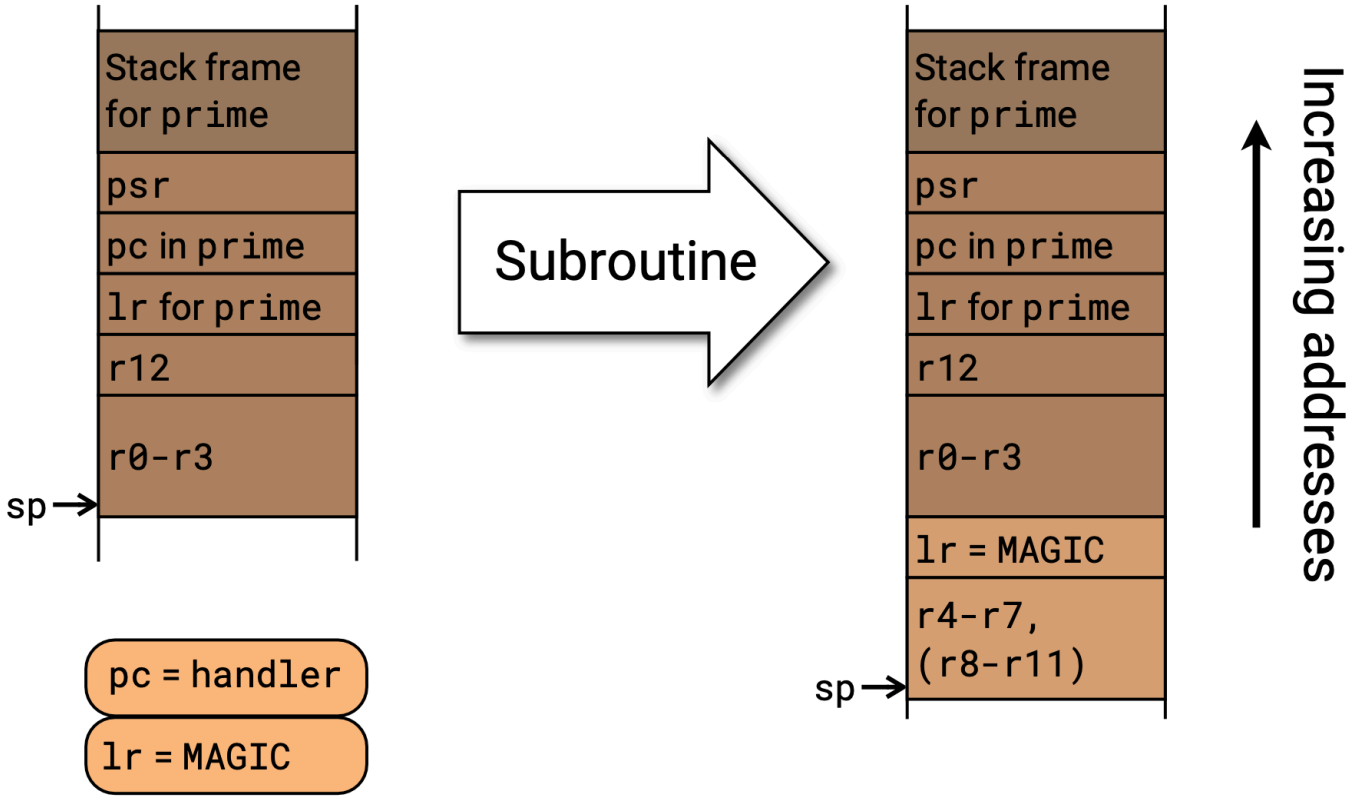

Exiting Handler (what software must do)

Can return from subroutine in usual way (`bx lr` or `pop`).

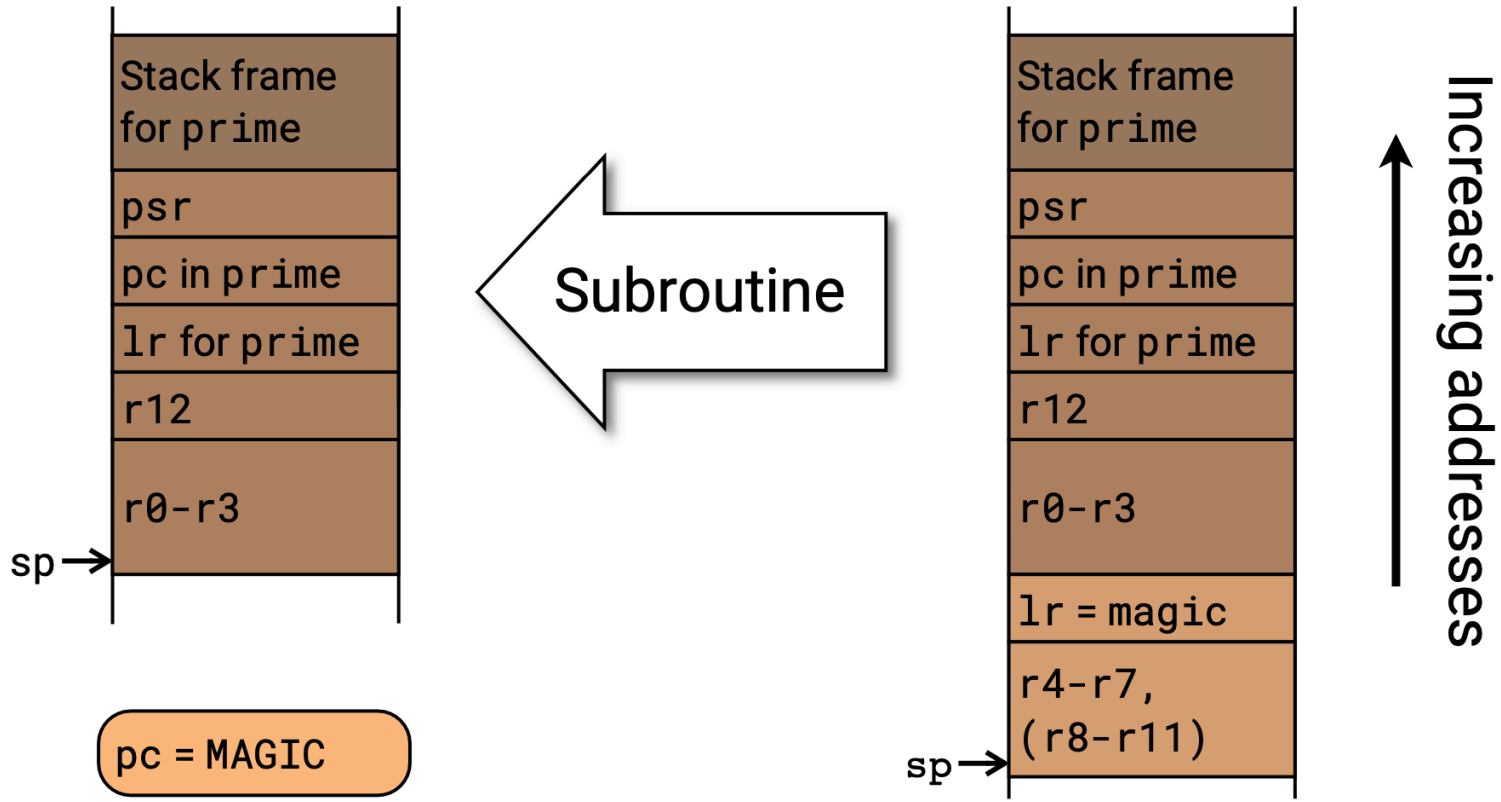

Exiting Interrupt

pc is set to magic number ⇒ follow return from interrupt procedure.

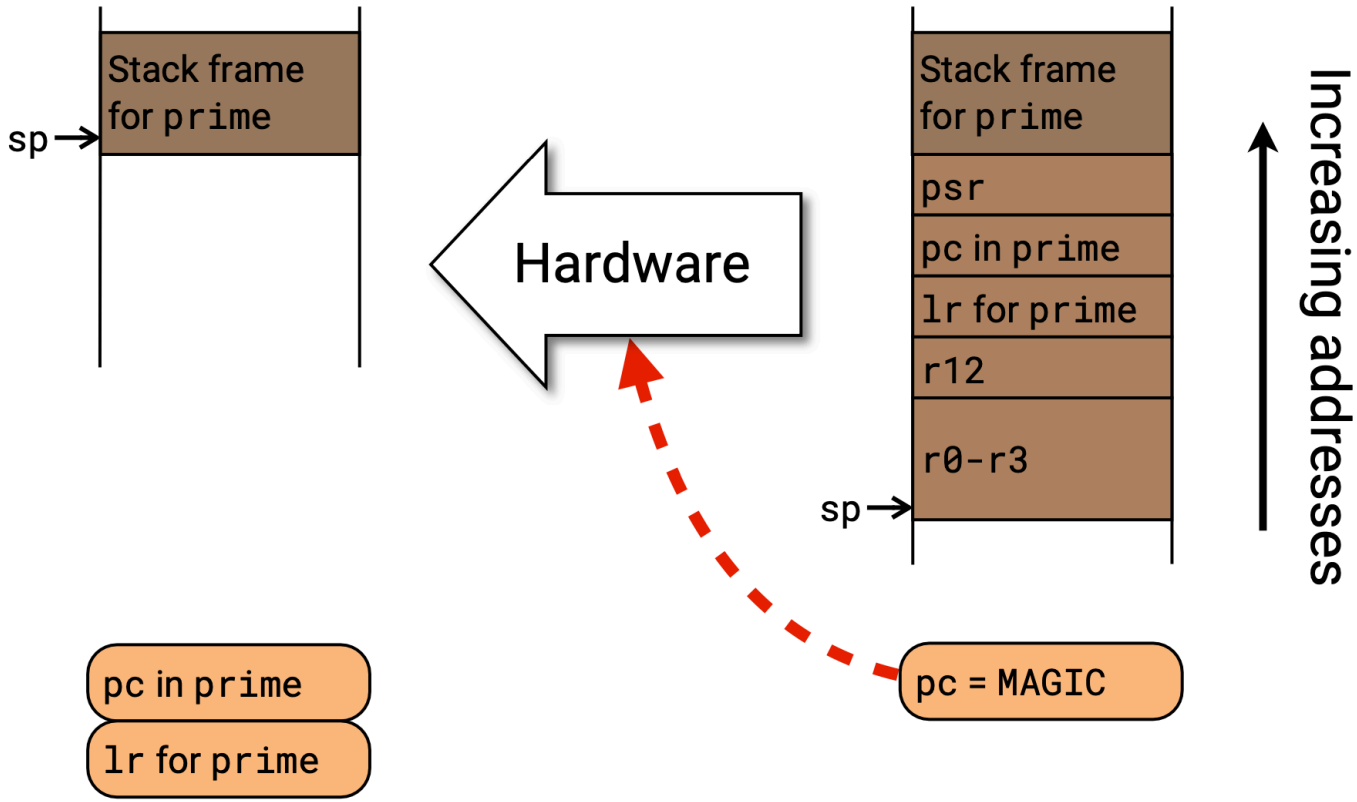

Hardware Obeys Calling Conventions

Advantages

- Interrupt handlers can be ordinary subroutines.
- No need for assembly-code adapters.

Disadvantages

- Interrupt latency is fixed and large.

Example: Timers

Scheduling Regular Actions

Version 0: delay loops (already seen).

- Wasteful of time and power.

Version 1: use a timer for delays (this lecture).

- Easier to maintain, but still wasteful of time and power.

Version 2: purely interrupt driven (this lecture).

- Allows computation while waiting but inflexible.

Version 3: use an operating system (next time).

- Best of all worlds!

Timers

Multiple compare circuits and counters (up to 32-bit) are available.

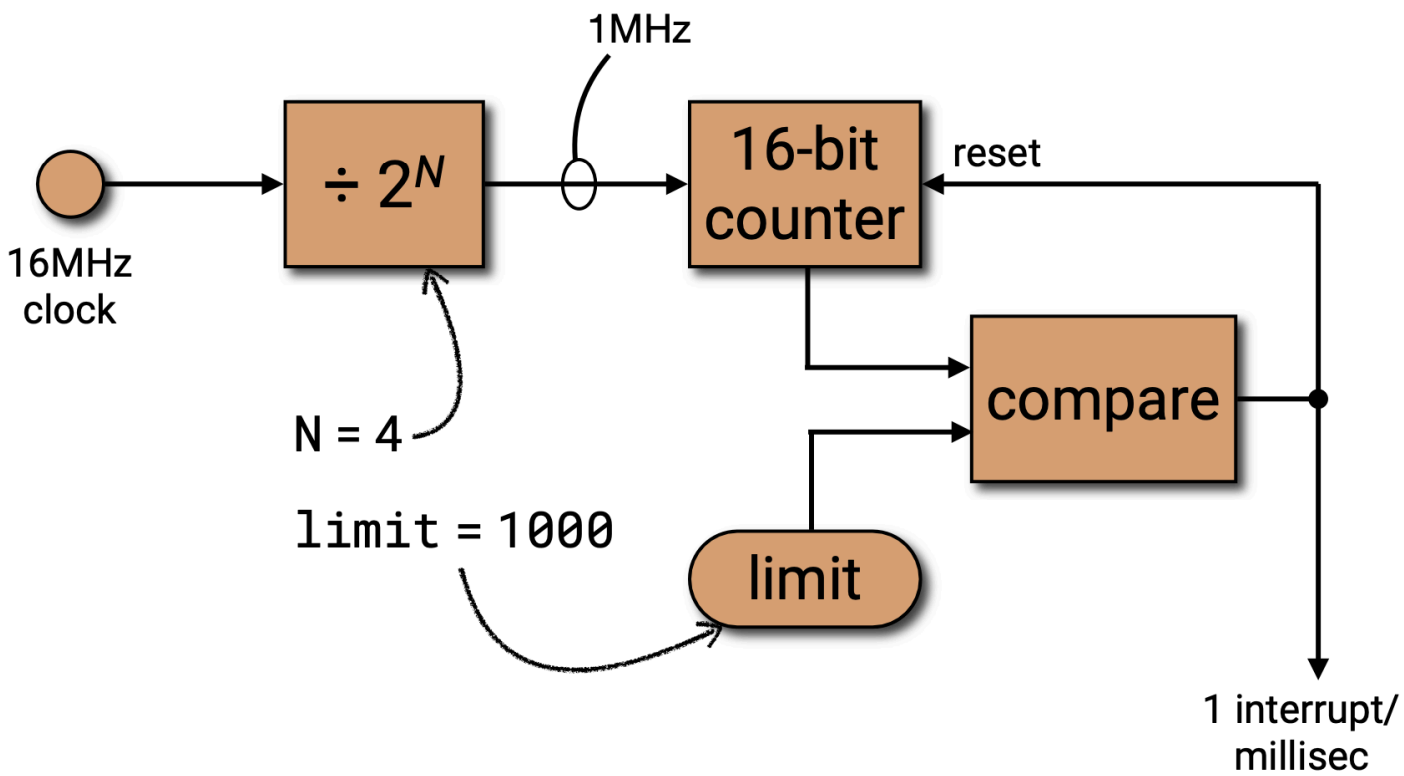

Delay v1: Power Efficient

```
unsigned volatile millis = 0;
void timer1_handler(void) {
    if (TIMER1_COMPARE[0]) {
        millis++;
        TIMER1_COMPARE[0] = 0;
    }
}

void delay(unsigned usec) {
    unsigned goal = millis + usec/1000;
    while (millis < goal) { pause(); } // Uses wfe instruction
}
```

Aside...

```
void delay(unsigned usec) {
    unsigned goal = millis + usec/1000;
    while (millis < goal) { pause(); } // Uses wfe instruction
}
```

- If `goal` overflows, loop terminates immediately ⇒ maximum delay gets smaller as `millis` increases! How to fix?
- `while ((millis - start_millis) < usec / 1000)`
- *Still works* if `millis` overflows!

Delay v2: Interrupt-driven

To allow computation while waiting, make `timer_interrupt` call this at 5ms intervals:

```
static int row = 0;
void advance(void) {
    row++;
    if (row == 3) row = 0;
    GPIO_OUT = heart[row];
}
```

- Compare to `delay()` solution where beating heart is shown with loop.
- Here: no internal control structure allowed.
- Efficient but inflexible.

Summary

- Details of how interrupts work.
- Timer circuits.

? How can we allow multiple subroutines to operate in an interleaved way?

- Currently, we can have one "main" function, that is interrupted. This function is special.
- How can we have multiple processes running concurrently, that are interrupted to interleave with one another?