# Digital Systems

## Lecture 14

## Context Switching

Mark van der Wilk

Hilary Term 2025

Department of
COMPUTER
SCIENCE

Following the course of past years by Mike Spivey

# Today

**? How does the OS switch tasks?**

- How does it decide what to run next?
- How does it move messages?
- **How does it actually do the context switch?**

# Context Switching

Switch processes on `send()`, `receive()`, `yield()`, or interrupt.

Temporarily passes control to OS, which then decides what to do next.

The plan to do so:

- 
- 
- 

# Context Switching

Switch processes on `send()`, `receive()`, `yield()`, or interrupt.

Temporarily passes control to OS, which then decides what to do next.

The plan to do so:

- Enter the OS via a software interrupt instruction `svc`, or by a normal interrupt.
-
-

# Context Switching

Switch processes on `send()`, `receive()`, `yield()`, or interrupt.

Temporarily passes control to OS, which then decides what to do next.

The plan to do so:

- Enter the OS via a software interrupt instruction `svc`, or by a normal interrupt.
- Save *entire* processor state on the stack.
-

# Context Switching

Switch processes on `send()`, `receive()`, `yield()`, or interrupt.

Temporarily passes control to OS, which then decides what to do next.

The plan to do so:

- Enter the OS via a software interrupt instruction `svc`, or by a normal interrupt.
- Save *entire* processor state on the stack.
- After choosing a new process, restore its state to continue.

# Context Switching

Switch processes on `send()`, `receive()`, `yield()`, or interrupt.

Temporarily passes control to OS, which then decides what to do next.

The plan to do so:

- Enter the OS via a software interrupt instruction `svc`, or by a normal interrupt.
- Save *entire* processor state on the stack.
- After choosing a new process, restore its state to continue.

# Context Switching

Switch processes on `send()`, `receive()`, `yield()`, or interrupt.

Temporarily passes control to OS, which then decides what to do next.

The plan to do so:

- Enter the OS via a software interrupt instruction `svc`, or by a normal interrupt.
- Save *entire* processor state on the stack.
- After choosing a new process, restore its state to continue.

**Operating System is basically one big interrupt**

## `svc` interrupt vs normal interrupt

Instruction `svc` (supervisor call) operates like a normal interrupt:

- 
- 
- 
- 
- 
- 

## `svc` interrupt vs normal interrupt

Instruction `svc` (supervisor call) operates like a normal interrupt:

- Hardware stores the usual state to conform to calling convention.
-
-
-
-

# `svc` interrupt vs normal interrupt

Instruction `svc` (supervisor call) operates like a normal interrupt:

- Hardware stores the usual state to conform to calling convention.
- `r0-r3`, `r12`, `lr`, `pc`, `psr`
-
-
-
-

## `svc` interrupt vs normal interrupt

Instruction `svc` (supervisor call) operates like a normal interrupt:

- Hardware stores the usual state to conform to calling convention.
- `r0-r3`, `r12`, `lr`, `pc`, `psr`
- Magic value is placed in `lr`, so hardware knows to do special return.

-

-

-

## `svc` interrupt vs normal interrupt

Instruction `svc` (supervisor call) operates like a normal interrupt:

- Hardware stores the usual state to conform to calling convention.
- `r0-r3`, `r12`, `lr`, `pc`, `psr`
- Magic value is placed in `lr`, so hardware knows to do special return.

-

-

-

## `svc` interrupt vs normal interrupt

Instruction `svc` (supervisor call) operates like a normal interrupt:

- Hardware stores the usual state to conform to calling convention.
- `r0-r3`, `r12`, `lr`, `pc`, `psr`
- Magic value is placed in `lr`, so hardware knows to do special return.

Differences:

-
-
-

## `svc` interrupt vs normal interrupt

Instruction `svc` (supervisor call) operates like a normal interrupt:

- Hardware stores the usual state to conform to calling convention.
- `r0-r3`, `r12`, `lr`, `pc`, `psr`
- Magic value is placed in `lr`, so hardware knows to do special return.

Differences:

- Hardware moves CPU to different state (traced in `CONTROL`), from "user" to "kernel".
-
-

## `svc` interrupt vs normal interrupt

Instruction `svc` (supervisor call) operates like a normal interrupt:

- Hardware stores the usual state to conform to calling convention.
- `r0-r3`, `r12`, `lr`, `pc`, `psr`
- Magic value is placed in `lr`, so hardware knows to do special return.

Differences:

- Hardware moves CPU to different state (traced in `CONTROL`), from "user" to "kernel".
- `sp` now patches through a different register, so OS has its own stack.
-

## `svc` interrupt vs normal interrupt

Instruction `svc` (supervisor call) operates like a normal interrupt:

- Hardware stores the usual state to conform to calling convention.
- `r0-r3`, `r12`, `lr`, `pc`, `psr`
- Magic value is placed in `lr`, so hardware knows to do special return.

Differences:

- Hardware moves CPU to different state (traced in `CONTROL`), from "user" to "kernel".
- `sp` now patches through a different register, so OS has its own stack.
- Different magic value is placed in `lr`.

# Context Switch I

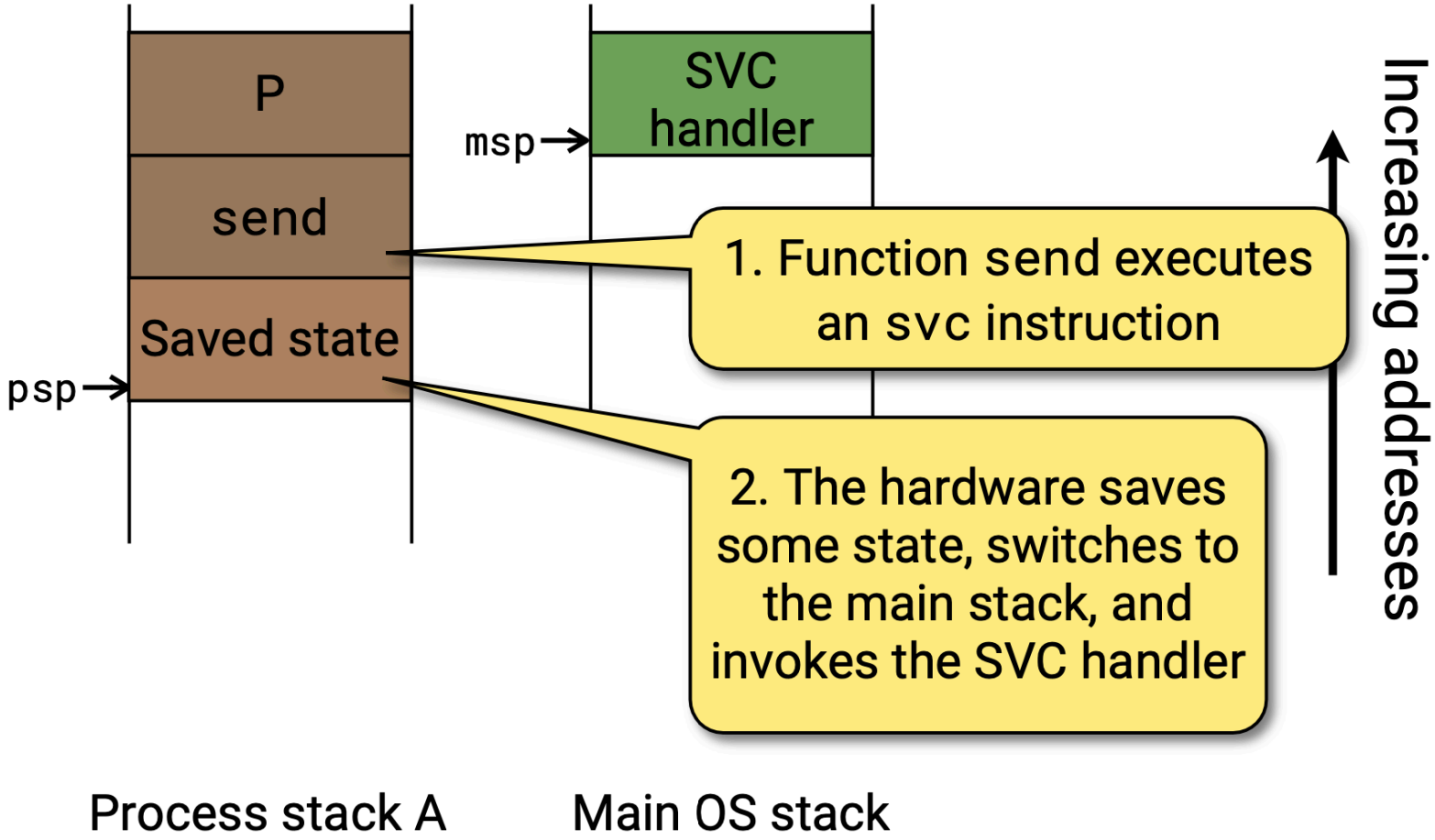

# Context Switch II

We additionally want:

- to be able to run a different process,
- so we cannot rely on subroutine conventions to restore state in correct way,
- we must store *all* state of the process on the stack.

# Context Switch II

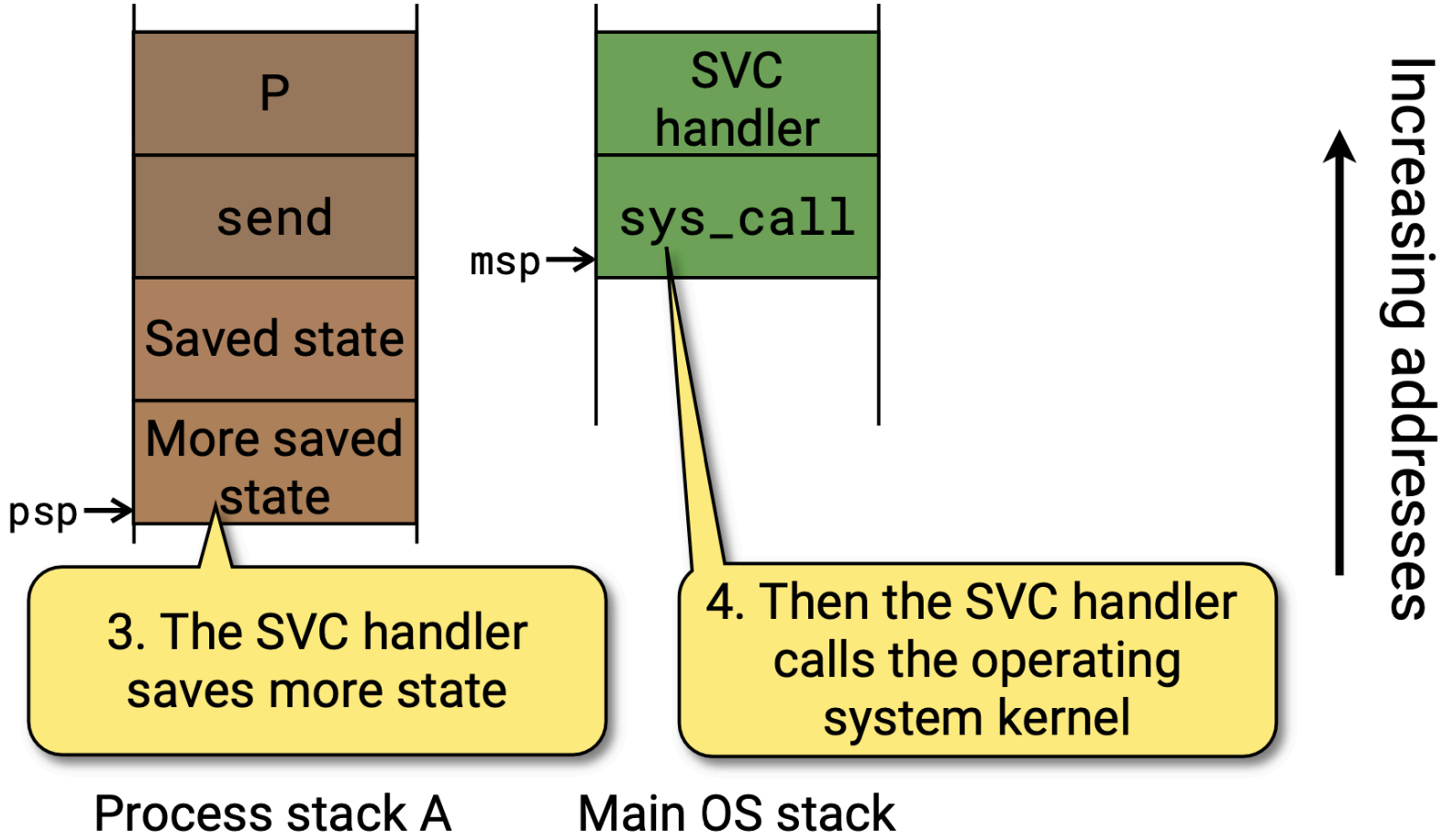

# Context Switch III

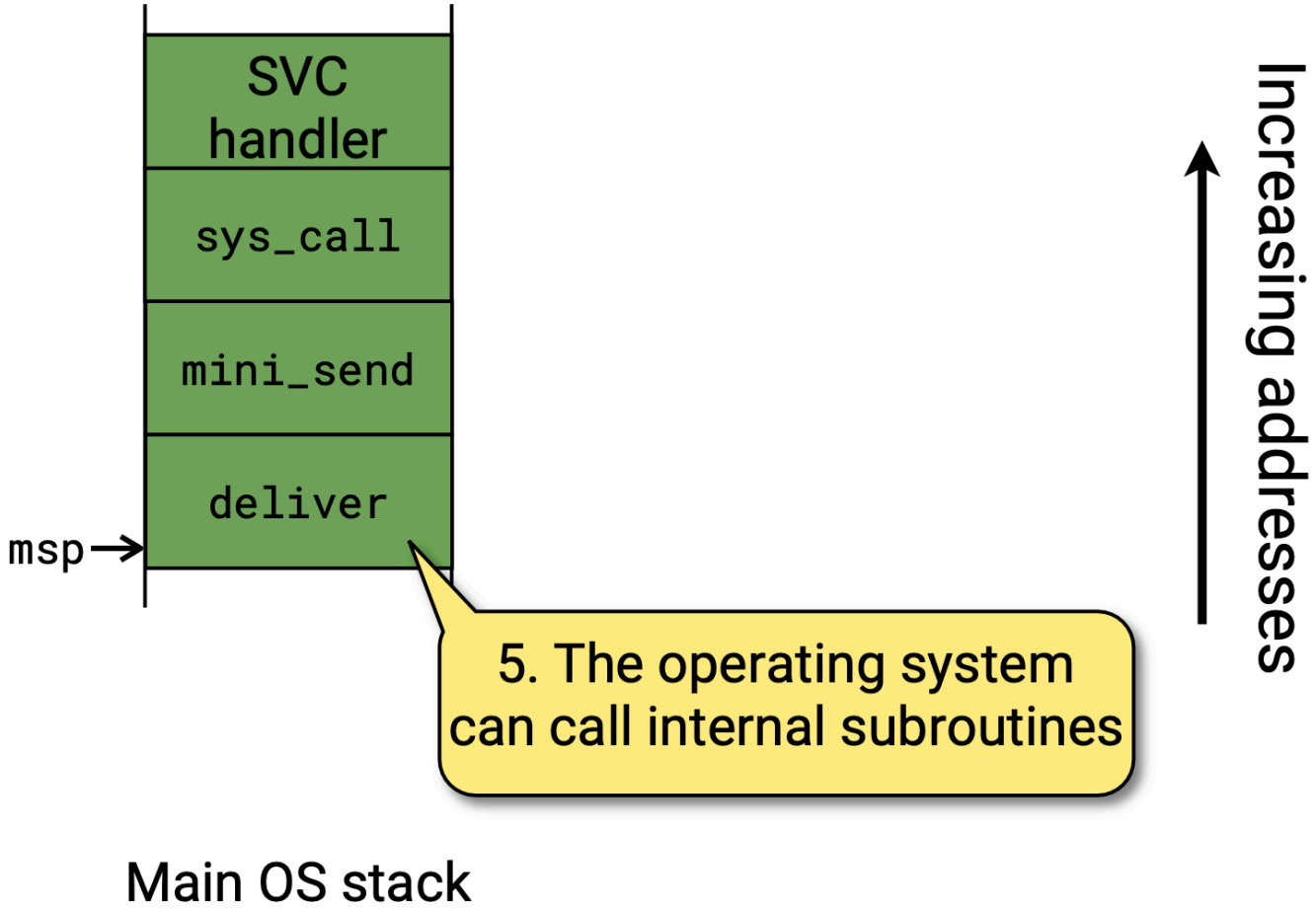

# Context Switch IV

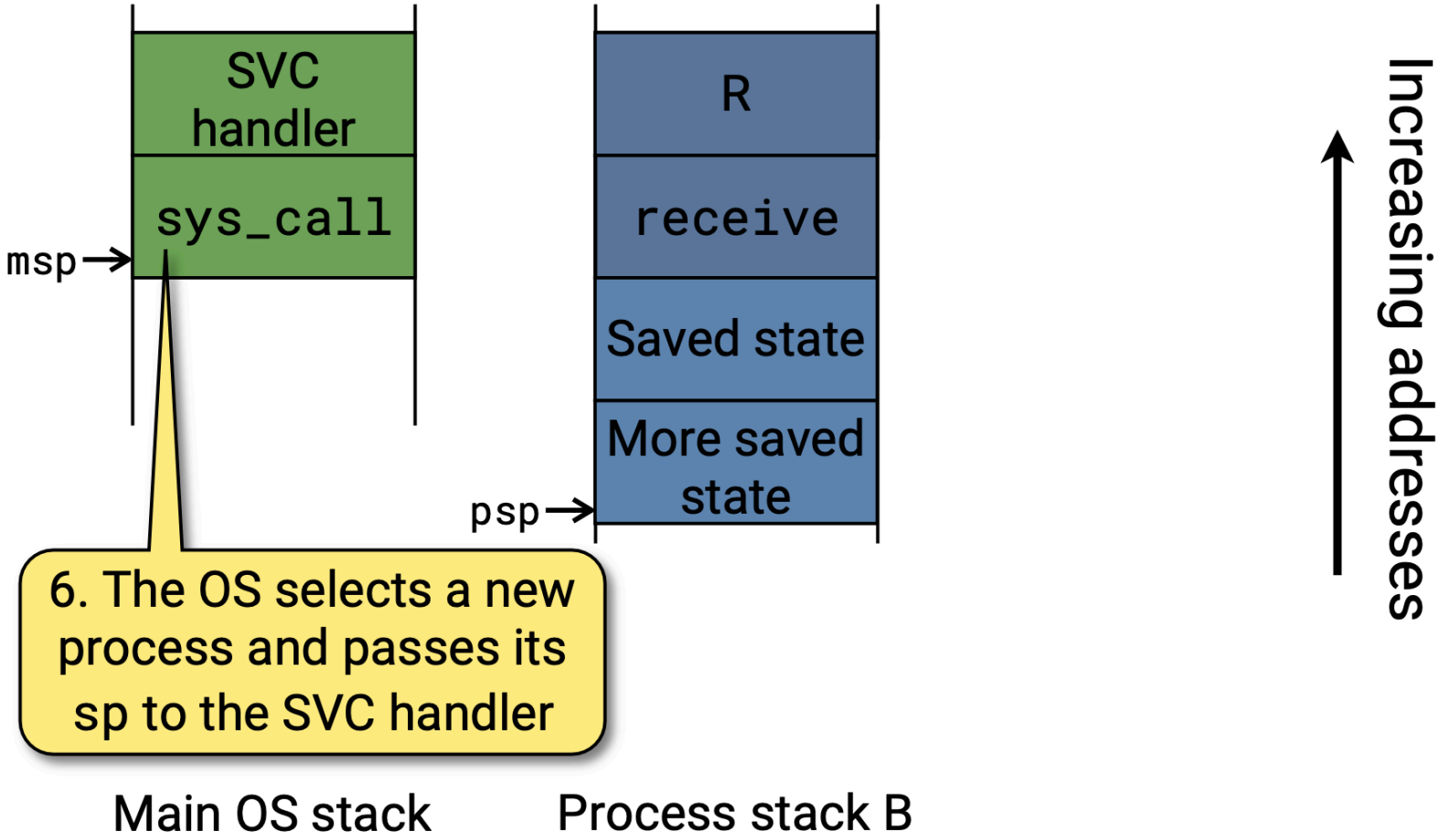

# Context Switch V

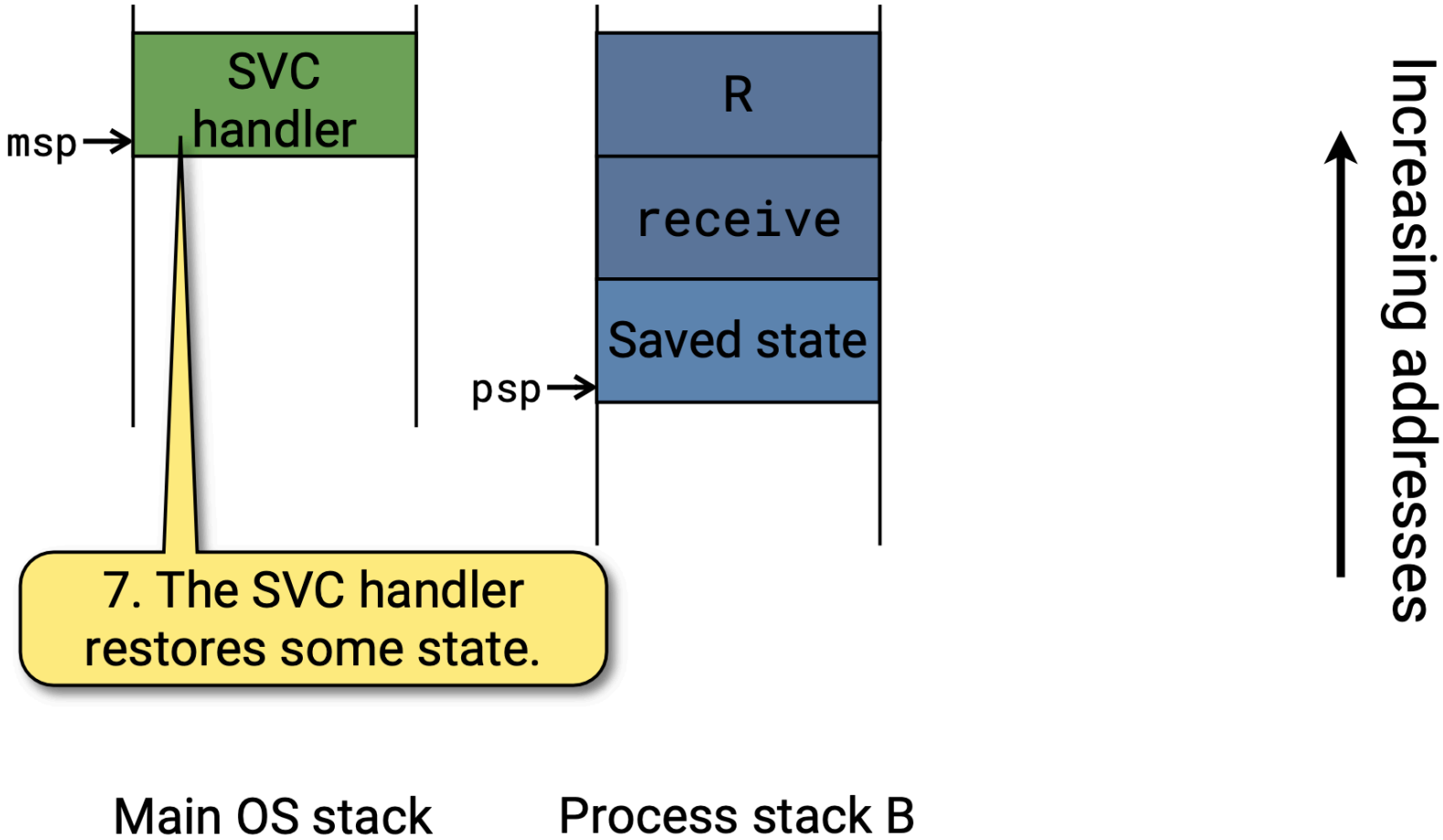

# Context Switch VI

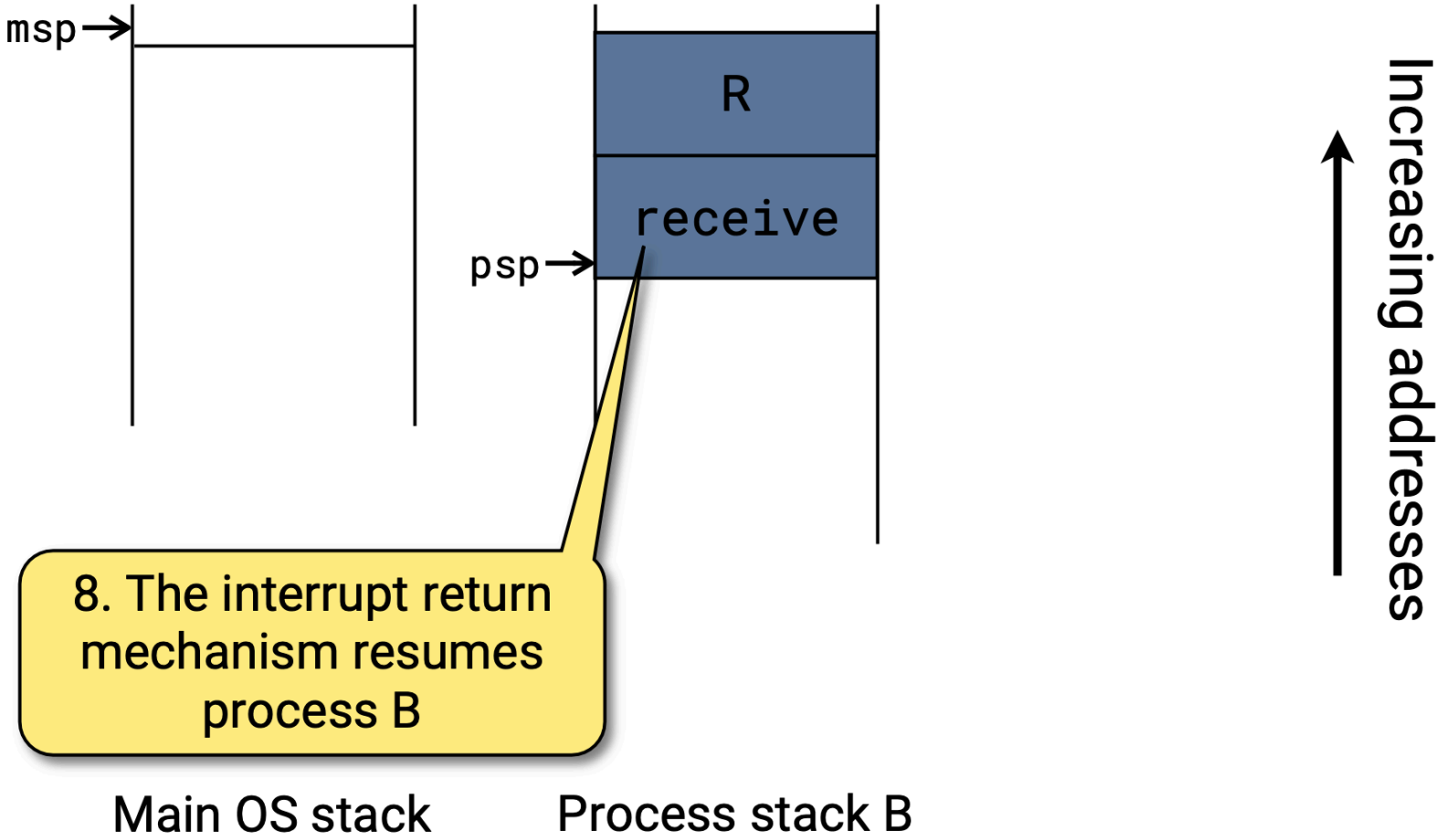

# Initiating System Calls

```
void NOINLINE yield(void) {
    syscall(SYS_YIELD);
}

void NOINLINE send(int dest, int type,
                   message *msg) {
    syscall(SYS_SEND);
}
```

OS will find arguments in registers `r0-r2`

Generates an `svc` instruction

# Handling System Calls

Sequence of events:

- 
- 
- 
- 
- 

# Handling System Calls

Sequence of events:

- `startup.c`: Vectors table.
-
-
-
-

# Handling System Calls

Sequence of events:

- `startup.c`: Vectors table.
- `mpx-m0.s`: `svc_handler` stores remaining state.
-
-
-

# Handling System Calls

Sequence of events:

- `startup.c`: Vectors table.
- `mpx-m0.s`: `svc_handler` stores remaining state.
- `microbian.c`: `system_call()` handles call, determines next process, returns stack pointer of process.
-
-

# Handling System Calls

Sequence of events:

- `startup.c`: Vectors table.
- `mpx-m0.s`: `svc_handler` stores remaining state.
- `microbian.c`: `system_call()` handles call, determines next process, returns stack pointer of process.
- `mpx-m0.s`: `svc_handler` restores state of (new) process.
-

# Handling System Calls

Sequence of events:

- `startup.c`: Vectors table.
- `mpx-m0.s`: `svc_handler` stores remaining state.
- `microbian.c`: `system_call()` handles call, determines next process, returns stack pointer of process.
- `mpx-m0.s`: `svc_handler` restores state of (new) process.
- `bx ...`: Returns to magic number `0xfffffffd`

## svc_handler

```
svc_handler:
    isave @ Complete saving of state
    @@ Argument in r0 is sp of old process
    bl system_call @ Perform system call
    @@ Result in r0 is sp of new process
    irestore @ Restore saved state
```

## Saving the State

Unavoidable bit of assembly to store additional state, since this is not done by hardware, cannot be done by calling convention, and C cannot be trusted to get this right.

```
@@@ isave -- save context for system call
    .macro isave
    mrs r0, psp          @ Get thread stack pointer
    subs r0, #36
    movs r1, r0
    mov r3, lr           @ Preserve magic value
    stm r1!, {r3-r7}     @ Save low regs on thread stack
    mov r4, r8           @ Copy from high to low
```

```
mov r5, r9
mov r6, r10
mov r7, r11
stm r1!, {r4-r7}    @ Save high regs on thread stack
.endm               @ Return new thread sp
```

# System Call: OS Side

```
unsigned *system_call(unsigned *psp) {
    short *pc = (short *) psp[PC_SAVE];
    int op = pc[-1] & 0xff;
    os_current->sp = psp;
    switch (op) {
    case SYS_YIELD:
        make_ready(os_current);
        choose_proc();
        break; ...
    }
    return os_current->sp;
}
```

# Remaining details

- How to start a process.
- How to start the entire operating system.
- How to schedule processes (next time).