Digital Systems

Lecture 8

Introducing I/O

Mark van der Wilk

Hilary Term 2025

UNIVERSITY OF OXFORD

Department of COMPUTER SCIENCE

Following the course of past years by Mike Spivey

Question from Last Lecture

Other load/store instructions…

`ldr` and `str` deal in 32-bit values, the size of a register. But there are also

- `ldrb` and `strb` for 8-bit values (useful for strings).
- `ldrh` and `strh` for 16-bit values.
- `ldrsb` and `ldrsh` to load 8- or 16-bit values with sign extension. Why is this necessary?

Aside: Buffer Overrun Attacks

- See notes. Not examinable this year (sadly!).
-
-
-

Aside: Buffer Overrun Attacks

- See notes. Not examinable this year (sadly!).
- Shows how, in many programs that communicate with the outside world, to make it execute arbitrary code.
-
-

Aside: Buffer Overrun Attacks

- See notes. Not examinable this year (sadly!).
- Shows how, in many programs that communicate with the outside world, to make it execute arbitrary code.
- Key principle behind lots of exploits that allow hacking into computer systems.
-

Aside: Buffer Overrun Attacks

- See notes. Not examinable this year (sadly!).
- Shows how, in many programs that communicate with the outside world, to make it execute arbitrary code.
- Key principle behind lots of exploits that allow hacking into computer systems.
- Highly recommend looking at it, at some point (… perhaps after term or in summer)

Digital Systems

Lecture 8

Introducing I/O

Mark van der Wilk

Hilary Term 2025

UNIVERSITY OF OXFORD

Department of COMPUTER SCIENCE

Following the course of past years by Mike Spivey

Today

How can we control LEDs on the BBC micro:bit?

Today

? How can we control LEDs on the BBC micro:bit?

But before we can answer this, we need to know a bit about how LEDs work, *electronically*.

Electronics of LEDs

Discuss on board: I-V char of LEDs

- Design: $R = 222\Omega, I \approx 4.5\text{mA}$.
- General Purpose In/Out (GPIO) pins on chip act as voltage source.

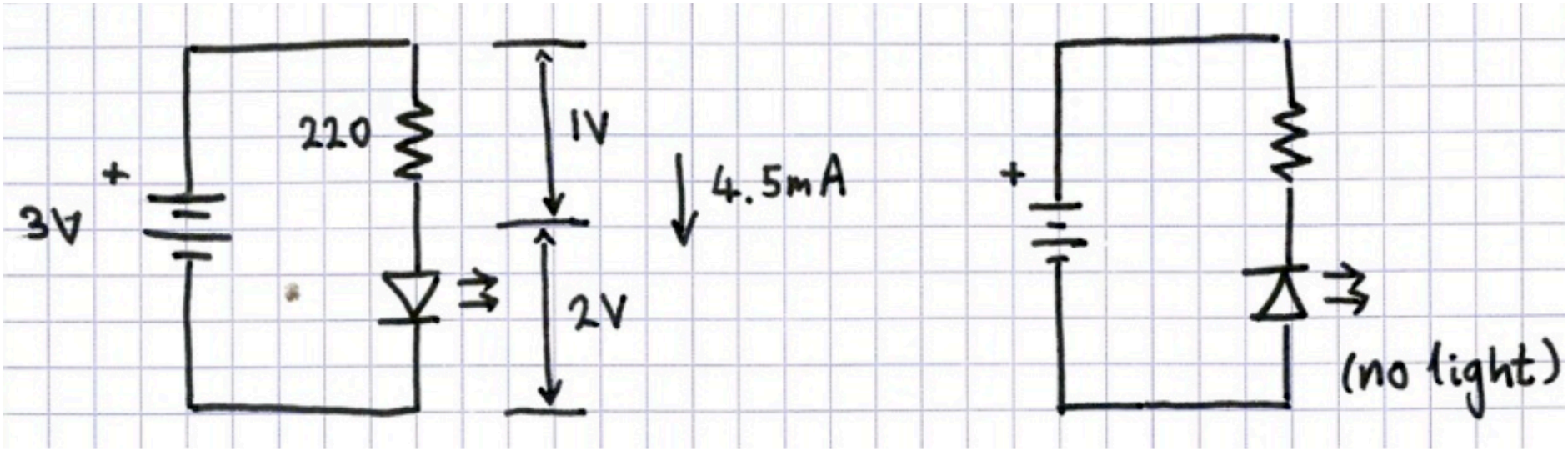

⚠ Limited GPIO pins on chip

We could connect one LED per GPIO pin…
but nRF51822 only has 31 GPIO pins!

LED Multiplexing

- A, B connected to anode (+ side of LED)
- X, Y, Z connected to cathode (- side of LED)
- Setting cathode-controlling GPIO to high, switches off all LEDs connected to it.
- LEDs no longer *independently* controllable.
- Can still make arbitrary patterns by switching on/off quickly.

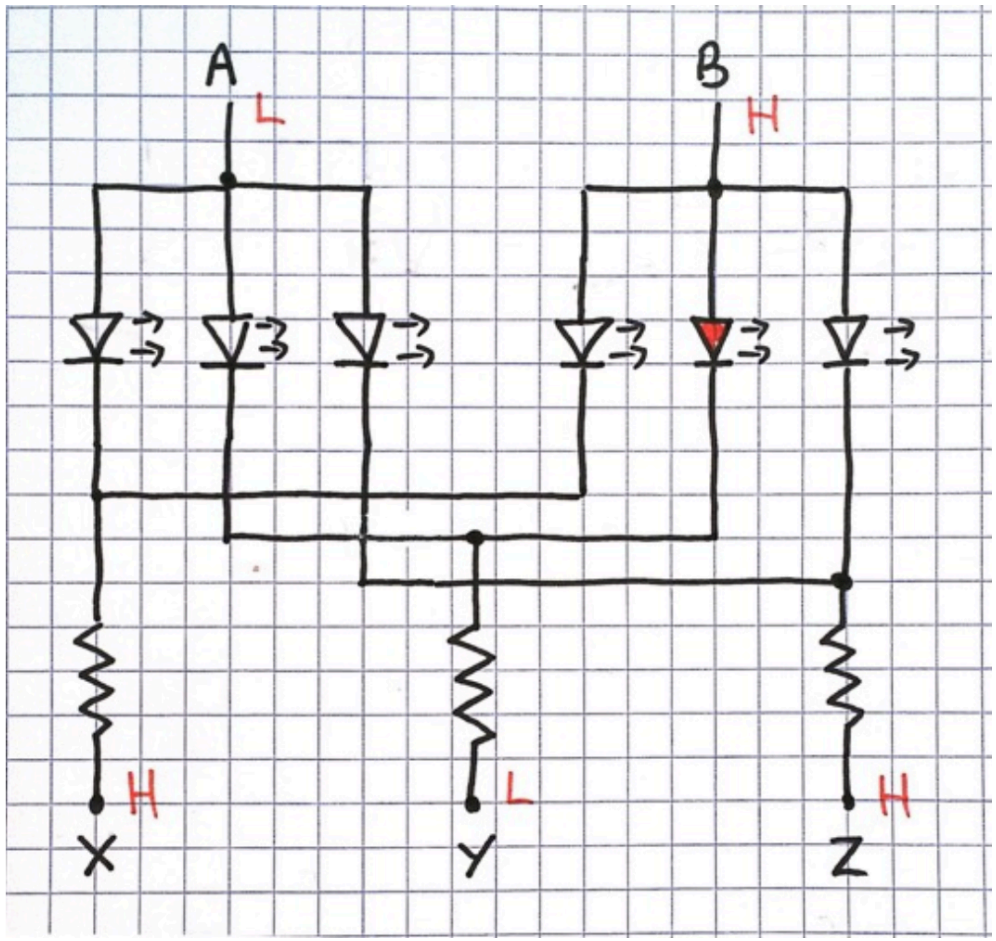

LED Multiplexing on the BBC

- BBC micro:bit has 25 multiplexed LEDs, in 5 physical rows and columns.
- *Electronically* arranged in 3 groups of 9.
- Can display patters by controlling each group in sequence:
  - Row 1: 5, 6, 7, 9
  - Row 2: 1, 2, 3, 4, 5
  - Row 3: 1, 4, 5, 6, 7, 8, 9

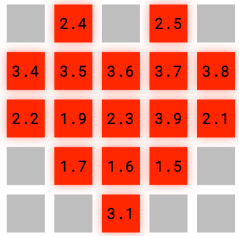

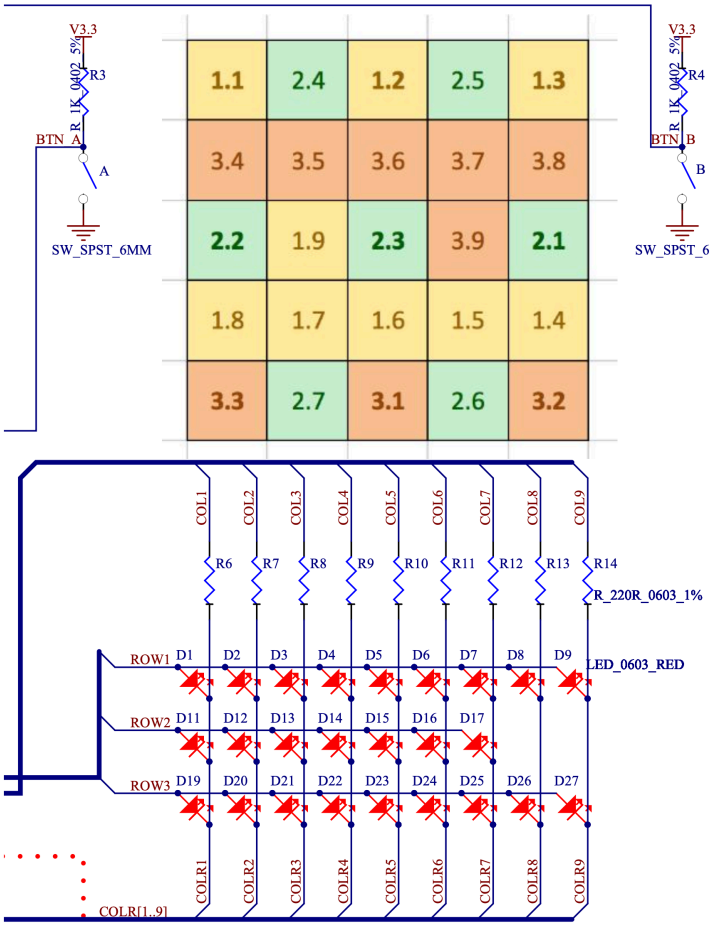

Questions

Consider

A GPIO ports connected to LED anodes, and

C GPIO ports connected to LED cathodes.

Questions

Consider

A GPIO ports connected to LED anodes, and

C GPIO ports connected to LED cathodes.

? How many LEDs can you control in total?

Questions

Consider

A GPIO ports connected to LED anodes, and

C GPIO ports connected to LED cathodes.

? How many LEDs can you control in total?

? How many LEDs can be *independently* controlled?

Controlling GPIO outputs

- GPIO controls voltage.
- Peripherals are *memory mapped*,
  i.e. controlled by writing to a memory location.

```
GPIO_DIR 0x50000514          Controls in/out direction
GPIO_OUT 0x50000504          High or low for each pin
```

For example:

```
ldr r0, =0x50000504
ldr r1, =0x5fb0
str r1, [r0]
```

or in C:

```
#include "hardware.h"
...
GPIO_OUT = 0x5fb0
```

Lighting a Single LED

LEDs are connected as:

```
     ...|R3 R2 R1 C9|C8 C7 C6 C5|C4 C3 C2 C1|0000
bits     15----13 12-----------------------4
```

So lighting LED 5 in row 2..:

Lighting a Single LED

LEDs are connected as:

```
     ...|R3 R2 R1 C9|C8 C7 C6 C5|C4 C3 C2 C1|0000
bits     15----13 12-----------------------4
```

So lighting LED 5 in row 2..:

```
...   |R3 R2 R1 C9|C8 C7 C6 C5|C4 C3 C2 C1|0000
...00 | 0  1  0  1| 1  1  1  1| 1  0  1  1|0000
       5           f           b           0
```

```
GPIO_OUT = 0x5fb0
```

GPIO Bit Patterns

LEDs are connected as:

```
     ...|R3 R2 R1 C9|C8 C7 C6 C5|C4 C3 C2 C1|0000
bits     15----13 12-----------------------4
```

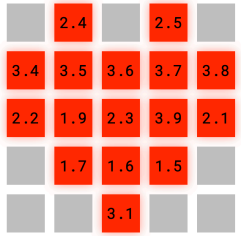

- Row 1: 5, 6, 7, 9
- Row 2: 1, 2, 3, 4, 5
- Row 3: 1, 4, 5, 6, 7, 8, 9

GPIO Bit Patterns

LEDs are connected as:

```
     ...|R3 R2 R1 C9|C8 C7 C6 C5|C4 C3 C2 C1|0000
bits     15----13 12-----------------------4
```

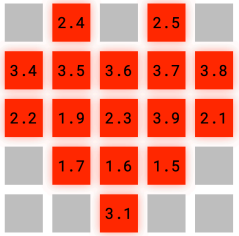

- Row 1: 5, 6, 7, 9
- Row 2: 1, 2, 3, 4, 5
- Row 3: 1, 4, 5, 6, 7, 8, 9

```
...    |R3 R2 R1 C9|C8 C7 C6 C5|C4 C3 C2 C1|0000
...00 | 1  0  0  0| 0  0  0  0| 0  1  1  0|0000
        8           0           6           0
```

Multiplexing GPIO

```
while (1) {
    GPIO_OUT = 0x28f0;
    delay(JIFFY);
    GPIO_OUT = 0x5e00;
    delay(JIFFY);
    GPIO_OUT = 0x8060;
    delay(JIFFY);
}
```

Use say JIFFY = 5000 for 67 updates/sec.

Frame Function

```
static const unsigned heart[] = {  0x28f0, 0x5e00, 0x8060  }
/* frame -- show three rows n times */
void frame(const unsigned *img, int n) {
  while (n > 0) {
    for (int p = 0; p < 3; p++) {
      GPIO_OUT = img[p];
      delay(JIFFY);
    }
    n--;
  }
}
```

Implementing Delay

```
void delay(unsigned usec) {
  unsigned n = 2 * usec;
  while (n > 0) {
    nop(); nop(); nop();
    n--;
  }
}
```

- Experiment shows that each iteration takes 8 cycles = 0.5µs at 16MHz.
- Different numbers needed on V2 at 64MHz.
- Different numbers needed if compiler changes.
- … or if anything changes!

How is `GPIO_OUT` implemented?

We want to make C write to a specific memory location! Pointers.

How is `GPIO_OUT` implemented?

We want to make C write to a specific memory location! Pointers.

```
(* (volatile unsigned *) 0x50000504) = ...
```

How is `GPIO_OUT` implemented?

We want to make C write to a specific memory location! Pointers.

```
(* (volatile unsigned *) 0x50000504) = ...
```

Use C preprocessor to do this.

How is `GPIO_OUT` implemented?

We want to make C write to a specific memory location! Pointers.

```
(* (volatile unsigned *) 0x50000504) = ...
```

Use C preprocessor to do this.

```
#define _REG(ty, addr)          (* (ty volatile *) addr)
#define GPIO_OUT                _REG(unsigned, 0x50000504)
```

Pushbuttons

Board: Circuit for pushbutton (pull-up resistor)

Must configure a pin to be an input:

```
SET_FIELD(GPIO_PINCNF[BUTTON_A], GPIO_PINCNF_INPUT,
GPIO_INPUT_Connect);
```

See `hardware.h`.

Pushbuttons

Board: Circuit for pushbutton (pull-up resistor)

Must configure a pin to be an input:

```
SET_FIELD(GPIO_PINCNF[BUTTON_A], GPIO_PINCNF_INPUT,
GPIO_INPUT_Connect);
```

See `hardware.h`.

```
unsigned x = GPIO_IN;
if (GET_BIT(x, BUTTON_A) == 0 || GET_BIT(x, BUTTON_B) == 0) {
  // A button is pressed
}
```

Summary

- How LEDs work electrically.
-
-
-
-
-

Summary

- How LEDs work electrically.
- How we can control N^2 LEDs using $2N$ GPIO pins using *multiplexing*.
-
-
-
-

Summary

- How LEDs work electrically.
- How we can control N^2 LEDs using $2N$ GPIO pins using *multiplexing*.
- How we can set a single LED in a multiplexed grid.
-
-
-

Summary

- How LEDs work electrically.
- How we can control N^2 LEDs using $2N$ GPIO pins using *multiplexing*.
- How we can set a single LED in a multiplexed grid.
- How we can create arbitrary patterns by quickly flashing LEDs on/off.
-
-

Summary

- How LEDs work electrically.
- How we can control N^2 LEDs using $2N$ GPIO pins using *multiplexing*.
- How we can set a single LED in a multiplexed grid.
- How we can create arbitrary patterns by quickly flashing LEDs on/off.
- How to configure GPIO.
-

Summary

- How LEDs work electrically.
- How we can control N^2 LEDs using $2N$ GPIO pins using *multiplexing*.
- How we can set a single LED in a multiplexed grid.
- How we can create arbitrary patterns by quickly flashing LEDs on/off.
- How to configure GPIO.
- How to use pushbuttons.