Lab #1: NL2SQL

BKMS I (2026)

Prof. Sang-Won Lee

TA. Kyongshik Lee

VLDB Lab.

2026.04.02 (Thu)

VLDB Lab.

1. What is NL2SQL?

2. Challenges of NL2SQL

3. NL2SQL Pipeline

4. Prompting Techniques

5. Lab 1: NL2SQL

VLDB Lab.

NL2SQL (Text-to-SQL)

- **NL2SQL** convert a user's question into a SQL query that a database can execute.
- It uses a Large Language Model (LLM) as the translator between human language and database language.

User Question

"Show me the top 5 customers by revenue"

>

LLM / NL2SQL Framework

GPT-4o / Claude / open-source models

>

SQL Query

```
SELECT name, revenue
FROM customers
ORDER BY revenue DESC
LIMIT 5
```

>

Database

PostgreSQL / MySQL / SQLite / ...

VLDB Lab.

Why Does NL2SQL Matter?

Data Accessibility

Non-technical users can query databases without learning SQL

Productivity

Even SQL experts spend less time writing routine queries

Scale

Enterprise databases have hundreds of tables — too many for any human to memorize

VLDB Lab.

Challenges of NL2SQL

- **Ambiguous natural language queries**: User queries are often vague and incomplete, making it difficult for the system to capture the intended meaning accurately.
- **Complex databases and dirty content**: Real-world databases have intricate table relationships, and column names or values are often inconsistent or contain errors, complicating query generation.
- **Natural language to SQL translation**: Bridging the gap between free-form natural language and the rigid, constrained syntax of SQL.
- **Technical issues in NL2SQL system development**: Practical considerations such as cost-efficient solutions and model efficiency must be addressed.

Challenges of NL2SQL

NL Query:

Find the names of all customers who checked out books on exactly 3 different genres on Labor Day in 2023.

Database:

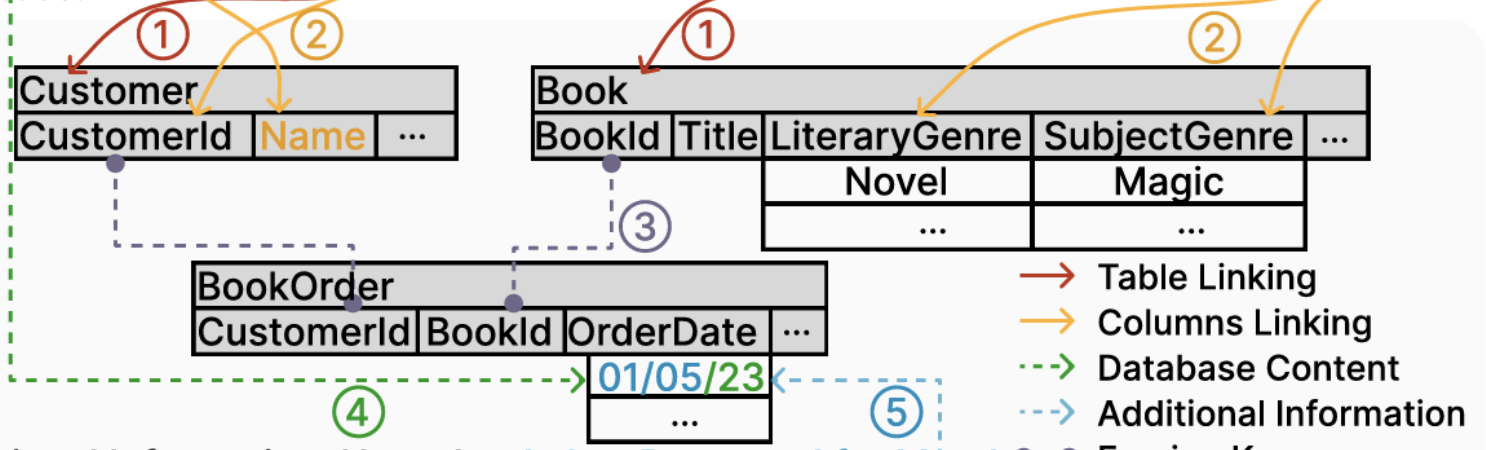

Additional Information: Note that Labor Day stand for May 1

SQL:

```
SELECT Name
FROM Customer
NATURAL JOIN BookOrder
NATURAL JOIN Book
WHERE OrderDate='01/05/23'
GROUP BY CustomerId, Name
HAVING COUNT(DISTINCT SubjectGenre)=3
                    LiteraryGenre
```

```
SELECT Name
FROM Customer
WHERE CustomerId = (SELECT CustomerId
FROM BookOrder NATURAL JOIN Book
WHERE OrderDate='01/05/23'
GROUP BY CustomerId
HAVING COUNT(DISTINCT SubjectGenre)=3)
                    LiteraryGenre
```

NLQ Disambiguate

+

Schema linking (Grounding)

+

SQL Generation

+

Refinement/Verification

VLDB Lab.

Benchmark vs. Reality

Academic Benchmarks

- Spider, Bird Benchmark
- 5-10 tables
- Clean schema
- GPT-4: ~80% accuracy

→

Enterprise Reality

- Spider 2.0, BEAVER benchmark
- 100 tables, 4~5 joins/query
- Chained 1:N relationships
- GPT-4o: ~0% accuracy

Pipeline

Schema
Table names, columns, foreign keys

Question
The user's natural language question

Extra context
Examples, definitions, profiling data

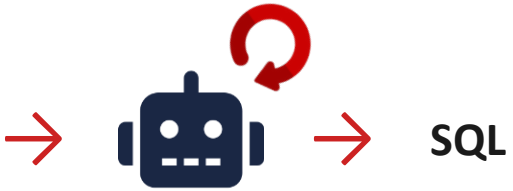

Same question + different prompts = very different SQL output

Pipeline

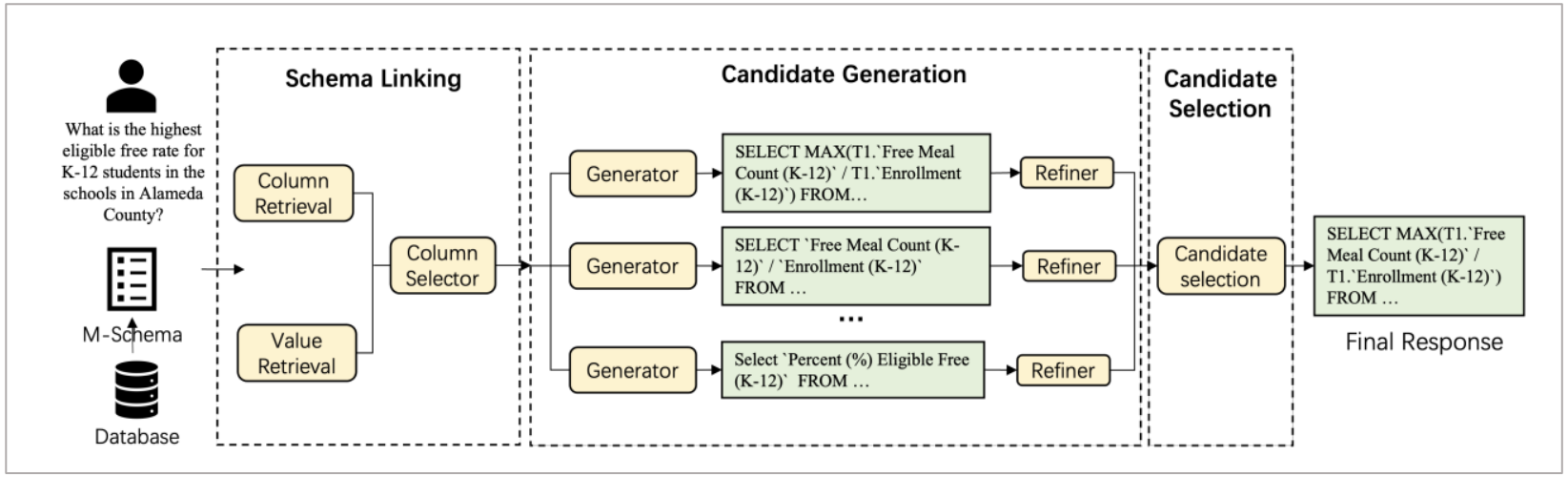

XiYan-SQL: A Multi-Generator Ensemble Framework for Text-to-SQL

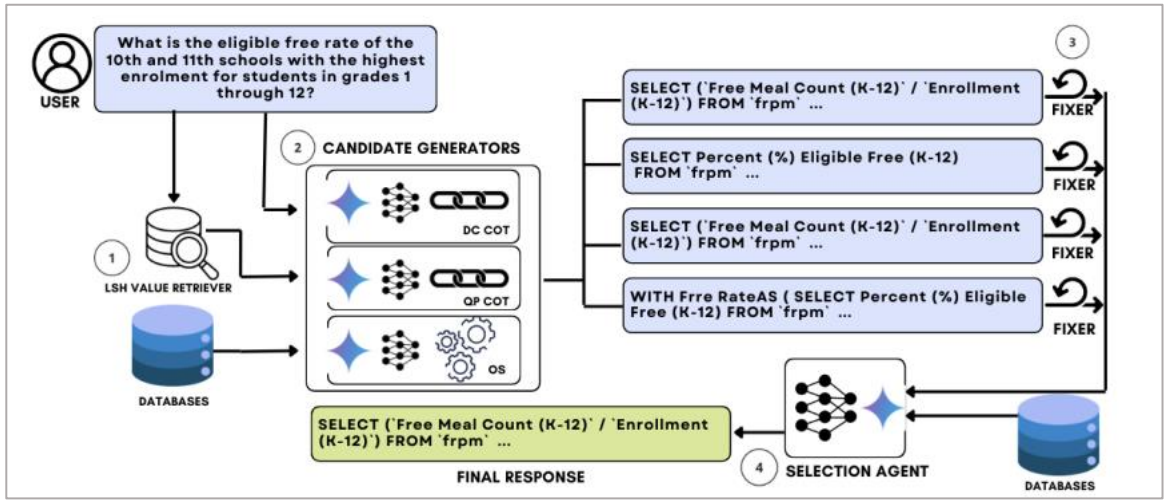

CHASE-SQL: Multi-Path Reasoning and Preference Optimized Candidate Selection in Text-to-SQL

VLDB Lab.

Five Techniques

1. **Zero-shot**

   Schema + question only (baseline)

2. **Few-shot**

   Add example question-SQL pairs

3. **Chain-of-Thought**

   "Think step by step" before writing SQL

4. **Ontology**

   Define business terms

5. **SQL Templates**

   Provide query patterns (ROW_NUMBER, LAG, WINDOW FUNCTIONS)

VLDB Lab.

Zero-shot vs. Few-shot

Zero-shot

```
Schema: Student(snum, sname, ...)
Schema: CREATE TABLE STUDENT (SNUM NUMBER..)
Schema: Student
          snum (type: num, samples: 1, 2..
                min: 1, max: 10, ..)

Question: "Show CS majors"

→ SELECT * FROM Student
  WHERE major = 'CS'
```

Few-shot

```
Schema + Examples:

Q: "Find suppliers of red parts"
A: SELECT S.sname
   FROM Suppliers S
   JOIN Catalog C ON S.sid=C.sid
   JOIN Parts P ON C.pid=P.pid
   WHERE P.color='Red'

Q: "Top student by age per major"
A: SELECT * FROM (
     ROW_NUMBER() OVER
     (PARTITION BY major
      ORDER BY age DESC) AS rn
   ) sub WHERE rn = 1

Question: "Top earner per dept"
```

VLDB Lab.

Chain-of-Thought (CoT)

Prompt

```
Schema: Student(...), Enrolled(...)
  Class(...), Faculty(...)

Question:
  "Which students are in
   J. Learn's classes?"

Before writing SQL,
think step by step.
```

LLM output

```
-- Step 1: Need Student +
--   Enrolled + Class + Faculty
-- Step 2: Join on snum, cname, fid
-- Step 3: Filter fname='J. Learn'
-- Step 4: Use DISTINCT

SELECT DISTINCT S.sname
FROM Student S
JOIN Enrolled E ON S.snum=E.snum
JOIN Class C ON E.cname=C.name
JOIN Faculty F ON C.fid=F.fid
WHERE F.fname = 'J. Learn';
```

Ontology & SQL Templates

Ontology

```
"premium supplier"
  = supplies 5+ distinct parts

"budget part"
  = cheapest price < $15

"core employee"
  = works in 2+ departments

"active department"
  = has 2+ employees

"honor student"
  = enrolled in 3+ classes

"exclusive part"
  = supplied by exactly 1 supplier
```

JSON

YAML

View

SQL Templates

```
Top-N per group:
  SELECT * FROM (
    SELECT *,
      ROW_NUMBER() OVER
      (PARTITION BY dept
       ORDER BY salary DESC) rn
    FROM Emp
  ) sub WHERE rn <= 3;

Compare with previous row:
  SELECT ename, salary,
    LAG(salary) OVER
      (ORDER BY salary DESC)
      AS prev_salary
  FROM Emp;
```

VLDB Lab.

Lab1: NL2SQL

- **Environment:** Google Colab
- **Model**: GPT-4o-mini
- **Goals**
  - Set up PostgreSQL in Colab and load data from CSV files
  - Write SQL queries (joins, subqueries, window functions)
  - Build an NL2SQL pipeline that converts natural language to SQL using an LLM
  - Apply prompting techniques: zero-shot, few-shot, chain-of-thought, ontology, SQL templates