Development of Wireless MEMS-Based Neural Probe System for Simultaneous Measurement of Electrical and Chemical Signals

[1]Keuntae Kim, [2]Yu-Been Kim, [2]Hyung Jin Choi [1]Il-joo Cho *
[1]Department of Convergence Medicine, College of Medicine, Korea Universit
[2]Department of Biomedical Sciences, College of Medicine, Seoul National University
E-mail: nokeuntae@naver.com

행동하는 동물 뇌에서의 전기 및 화학 신호 동시 측정을 위한 MEMS 기반 무선 뉴럴 프로브 시스템 개발

[1] 김근태, [2] 김유빈, [2] 최형진, [1] 조일주*,
[1] 고려대학교 의과대학, [2] 서울대학교 의과대학

Abstract

Understanding neural computation requires simultaneous access to electrical and chemical signaling in the brain, as these modalities jointly shape neuronal activity and network states. However, concurrent measurement of fast neural spiking and local neurochemical dynamics in freely behaving animals remains a major technical challenge due to constraints in size, wiring, and signal integration. Here, we present a wireless, multimodal, multi-site neural probe that enables simultaneous recording of neuronal firing and extracellular glucose dynamics across distributed brain regions in freely moving animals. The system integrates MEMS-based neural probe with on-board electrophysiological amplification, electrochemical sensing, and low-latency wireless data transmission. Using this untethered platform, we demonstrate in vivo identification of glucose-excited (GE) and glucose-inhibited (GI) neurons and reveal context-dependent coupling between brain glucose fluctuations, neuronal activity, and behavior. This work establishes a scalable device platform for studying neuro-metabolic interactions in naturalistic conditions.

Keywords: ***wireless, multi-modal, glucose, electrophysiology, in-vivo***

1. Introduction

The brain processes information through coordinated electrical and chemical signaling. Glucose, the primary energy substrate of the brain, not only supports its high metabolic demand but also directly modulates neuronal firing. Neurons have been classified as glucose-excited (GE) or glucose-inhibited (GI) in several brain regions, including the hypothalamus, hippocampus, and cortex, implicating glucose-sensitive signaling in energy homeostasis and cognition.

However, evidence for glucose-dependent modulation has largely relied on ex vivo or anesthetized preparations. Whether such modulation occurs in the intact brain of freely moving animals, and how endogenous brain glucose dynamics couple to neuronal activity, remain unresolved. Here, we address these challenges using a wireless, multimodal, multi-site neural probe that enables simultaneous measurement of extracellular glucose and neuronal firing across distributed brain regions in freely behaving animals, allowing in vivo identification of GE and GI neurons and investigation of context-dependent neuro-metabolic coupling.

2.1 Fabrication of the neural probe

We used MEMS fabrication techniques to fabricate a neural probe on a silicon-on-insulator wafer, with the top silicon layer forming the probe shank. Gold interconnects and platinum electrochemical electrodes were patterned. Neural recording electrodes were designed at 12 μm × 12 μm for single-unit recording, while the glucose biosensor area was 200 μm × 300 μm to ensure adequate sensitivity.

2.2 Wireless system architecture and data transmission

We developed a Bluetooth-based wireless system for real-time transmission of neural spikes and brain glucose signals. Neural activity was recorded using a 16-channel amplifier at 20 kHz, with threshold-based spike detection to reduce data load. For glucose sensing, glucose oxidase was immobilized on the probe, and enzymatically generated hydrogen peroxide was electrochemically detected. A transimpedance amplifier converted current signals into voltage signals for wireless transmission.

2.3 In vivo recording and demonstration of glucose-excited and glucose-inhibited neurons

Using the fabricated wireless multimodal neural probe system, we simultaneously measured neuronal firing and extracellular brain glucose levels in the in vivo mouse brain. The performance of the probe was validated by comparison with tethered reference systems.

In mice implanted with the bimodal probe in the hippocampus, neural spikes and extracellular brain glucose were continuously recorded for 1 hour, including during

systemic glucose injection. We successfully measured increased glucose concentration and modulated firing rates of neural spikes, simultaneously. Among six isolated single units, three neurons were identified as glucose-excited (GE), two as glucose-inhibited (GI), and one as glucose-insensitive, demonstrating heterogeneous glucose-dependent regulation of neuronal firing in vivo.

2.4 Context-dependent neuro-metabolic coupling

Brain glucose levels vary across regions depending on behavioral context. On-going experiments aim to simultaneously measure region-specific glucose dynamics and neuronal activity in the hypothalamus, hippocampus, nucleus accumbens, and prefrontal cortex using customized multi-shank probes. This approach will enable systematic investigation of neuro-metabolic coupling across behavioral states. (In progress)

Acknowledgments

This work supported by Research Program supported by the National Research Foundation of Korea (다중 신경망의 복합 신경신호 기반 실시간 일화기억 디코딩 기술 개발, RS-2025-02303740), Korea..

References

1. Gwenael Jabouebe, Benjamin Boutrel, David Tarussio, Bernard Thorens, Glucose-responsive neurons of the paraventricular thalamus control sucrose-seeking behavior, N*ature Neuroscience 19, 999-1002*(2016)
2. H. Shin, J. Byun, D. Roh, N.Choi, H.Shin, I.Cho, Interference-free, lightweight wireless neural probe system for investigating brain activity during natural competition, *Biosensors and Bioselectronics 195*(2022)

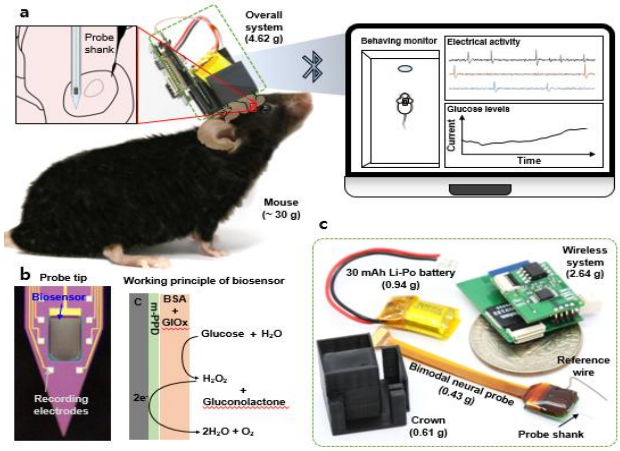

Fig. 1. Wireless bi-modal neural probe, operation principles, and design overview. (a) Schematic illustration of the setup for monitoring electrical and chemical signals simultaneously in real time. (b) Microscopic image of probe tip and schematic diagram illustrating the sensing mechanism of glucose using enzyme-based biosensors. (c) Optical image of components; wireless system, bi-modal neural probe, battery, 3-D printed crown.

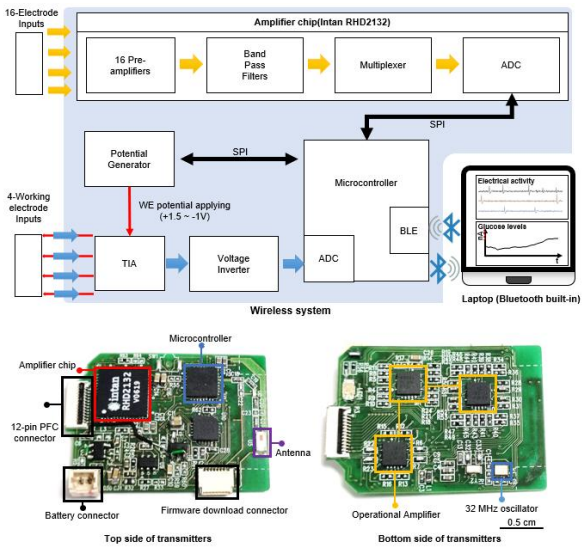

Fig. 2. Schematic diagram of multimodal wireless system. 16 electrodes for electrical signals and 4 working electrodes for chemical signals are processed through ADC (Analog to Digital Converter) and sent by BLE (Bluetooth Low Energy)

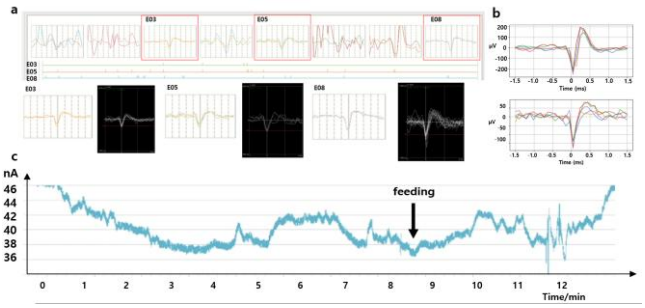

Fig. 3. Measurement of neural spikes and glucose concentration with wireless system. (a) Wireless system interface during in-vivo recording. (b) Sorted neural spikes with wireless system. (c) Oxidation current response for glucose in-vitro with wireless system. (d) In vivo brain glucose concentration measured by wireless system.

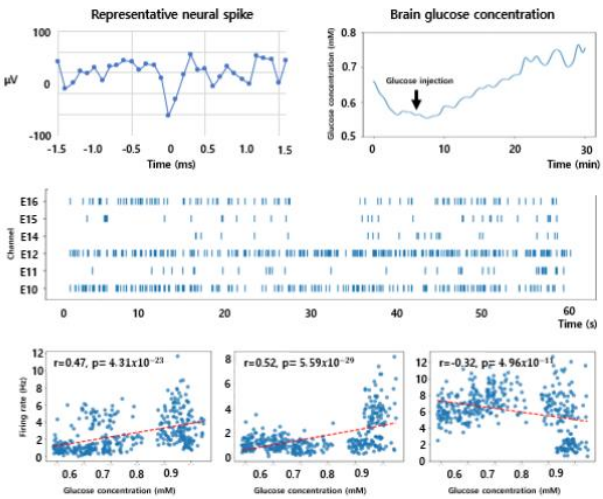

Fig. 4. Neural spikes and brain glucose concentration measured with wireless system and demonstration of glucose-sensitive neurons