A Through-Hole Cantilever Platform Integrated with Silicon Strain Sensors for Physiologically Relevant Double-Layer Cardiomyocytes Culture and Monitoring

[1]Fusong Li, [1]Haolan Sun, [1]Longlong Li, [1]Jongyun Kim, [1,2]Dong-Weon Lee*
[1]School of Mechanical Engineering, Chonnam National University,
[2]Center for Next-generation Sensor Research and Development, Chonnam National University
E-mail: mems@jnu.ac.kr

생리학적으로 적합한 이중층 심근세포 배양 및 모니터링을 위한 실리콘 변형 센서가 통합된 관통형 캔틸레버 플랫폼

[1] 리푸송, [1] 손호람, [1] 이룡룡, [1] 김종윤, [1,2] 이동원*,
[1] 전남대학교 기계공학과, [2] 전남대학교 차세대센서연구개발센터
E-mail: mems@jnu.ac.kr

Abstract

The immaturity of in vitro–cultured cardiomyocytes remain a major challenge for accurate contractility measurement and reliable cardiac drug screening. In native myocardium, cardiomyocytes form dense, multilayered tissues with strong electromechanical coupling; however, conventional flat cantilever platforms typically support only single-layer cultures with limited physiological relevance. Here, double-layer cardiomyocytes were constructed using a two-step seeding strategy, enabling higher cell density and promoting enhanced intercellular coupling, improved functional maturation, and increased contractile force. However, double-layer cultures on flat substrates suffer from restricted nutrient and oxygen transport to the underlying cells, resulting in elevated cell death. To address this limitation, a through-hole cantilever was developed to facilitate bidirectional diffusion of nutrients and oxygen, thereby improving mass transport and sustaining healthy double-layer cardiac tissues. Integrated with high-sensitivity silicon strain sensors, the platform enables precise and quantitative measurement of cardiomyocyte contractile force, providing a physiologically relevant system for cardiac maturation studies and reliable high-throughput drug screening.

Keywords: ***Through-hole, Silicon strain sensor, Double-layer cardiomyocytes, Drug screening***

1. Introduction

Recent studies still indicate that cardiovascular disease is a leading cause of death, with a projected prevalence of 7.3 million by 2025 [1]. This means that cardiovascular disease will remain a major concern in the future. Currently, many cardiovascular drugs have been withdrawn from the market due to drug toxicity issues [2]. Cardiovascular drug development is typically lengthy and costly, making accurate predictions of cardiotoxicity crucial in the early stages of research and development. To improve the reliability of drug screening, a physiologically relevant myocardial model is urgently needed.

In vivo, myocardial tissue is a tightly packed three-dimensional structure. Monolayer culture lacks this three-dimensional environment, resulting in cells that are predominantly flattened, with disordered sarcomere arrangement and low expression levels of key proteins such as Cx43 and α-actinin. Constructing bilayer or multilayer structures can increase physical contact and electrical coupling between cells, promoting structural maturation and high expression of functional proteins [3].

When culturing multilayer cells on a flat substrate, the bottom layer cells cannot adequately access substances from the culture medium and cannot exchange substances through the bottom. Once the tissue thickness exceeds the diffusion limit, or metabolically active cardiomyocytes stack up, the bottom layer cells will die due to hypoxia and accumulation of metabolic waste [4]. To overcome diffusion limitations, a through-hole structure is used to allow the culture medium to permeate bidirectionally from above and below. Through the perforations, oxygen and nutrients can reach the basal cells, while metabolic waste can be discharged in a timely manner, maintaining the activity of the double-layer cardiomyocytes.

By establishing a double-layer cardiomyocyte, we can obtain more mature cardiomyocyte tissue. At the same time, combined with a highly sensitive silicon strain sensor, we can efficiently and accurately monitor the contractile function of cardiomyocytes, thereby obtaining more reliable drug screening results [5].

2. Results and discussion

2.1 Single-layer and double-layer cardiomyocyte culture

As shown in Figure 1, by using two-time seeding method to establish a bilayer of cardiomyocytes, the results showed that the sarcomeres of the bilayer cardiomyocytes were relatively denser and more organized, which means that this model has a higher degree of maturity and is closer to the physiological environment, and is expected to obtain more reliable results in drug screening.

2.2 Device fabrication and testing systems

Figure 2(a) shows a silicon strain sensor integrated into polymer cantilever. Figure 2(b-c) shows the fabrication of the through-hole and grooved cantilever, where we fabricated through-holes of approximately 20 µm and grooves of approximately 5 µm on the cantilever. Figure 2(d) shows a test system we built to test the sensor's performance. This system uses a Z-axis moving platform and probe to apply displacement to the end of the cantilever beam. The circuit is a Wheatstone bridge; voltage changes are amplified and transmitted to a computer for real-time monitoring via a data acquisition converter, while a laser vibrator is used to measure the cantilever's displacement.

2.3 Sensor performance testing

As shown in Figure 3, we conducted a series of sensor performance tests, including linearity, sensitivity, and temperature effects. Its sensitivity is significantly improved compared to metal sensors, and it has high linearity. Although it is sensitive to temperature, the voltage remains relatively stable when the temperature is stable, which meets the requirements for cell signal measurement.

Acknowledgments

This work was supported by the National Research Foundation of Korea (NRF) grant funded by the Korea government (MSIT) (No. RS-2022-00165505 and RS-2020-NR049568).

References

[1] Chong, Bryan, et al. "Global burden of cardiovascular di seases: projections from 2025 to 2050." *European journa l of preventive cardiology* 32.11 (2025): 1001-1015.

[2] Mamoshina, Polina, Blanca Rodriguez, and Alfonso Bueno-Orovio. "Toward a broader view of mechanisms of drug cardiotoxicity." *Cell Reports Medicine* 2.3 (2021).

[3] Zhang, Donghui, et al. "Tissue-engineered cardiac patch for advanced functional maturation of human ESC-derived cardiomyocytes." *Biomaterials* 34.23 (2013): 5813-5820.

[4] Sakaguchi, Katsuhisa, et al. "Measuring the contractile force of multilayered human cardiac cell sheets." *Tissue Engineering Part C: Methods* 26.9 (2020): 485-492.

[5] Sun, Haolan, et al. "Enhancing cardiomyocytes contraction force measuring in drug testing: Integration of a highly sensitive single-crystal silicon strain sensor into SU-8 cantilevers." *Biosensors and Bioelectronics* 243 (2024): 115756.

(a)

(b)

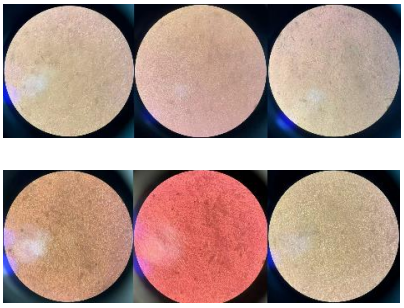

Fig. 1. Cell growth status on day 12 of culture (a) Single layer of cardiomyocytes (b) Double layer of cardiomyocytes

(a)

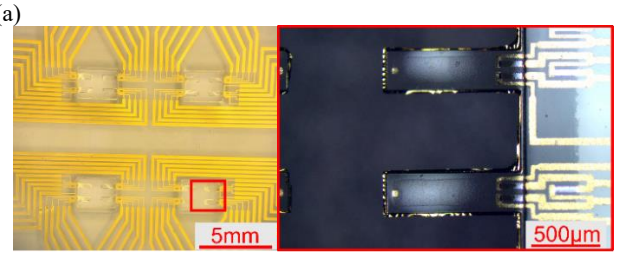

(b) (c)

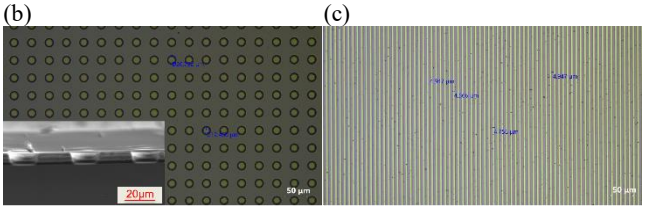

(d)

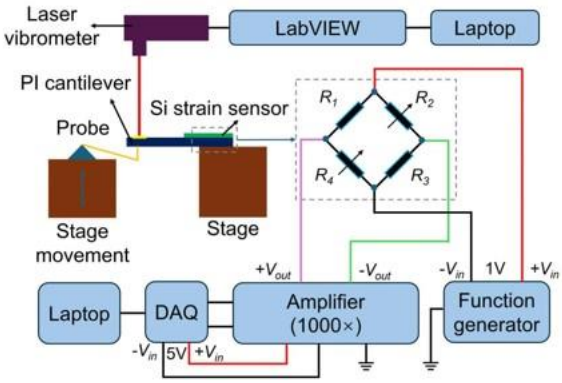

Fig. 2. (a) PI cantilever combined with silicon strain sensor (b) Performance testing system for silicon sensor. (c) Through-hole cantilever and SEM image (d) Groove cantilever

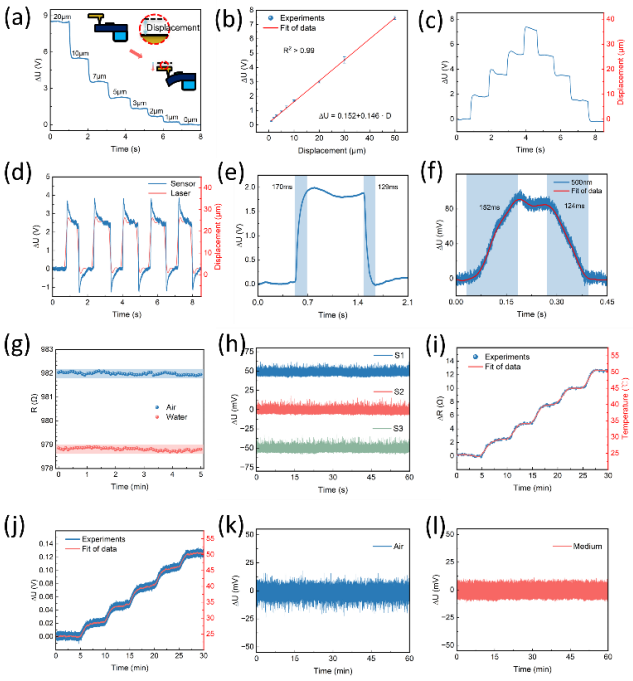

Fig. 3. (a-l) Performance test results of silicon sensors.