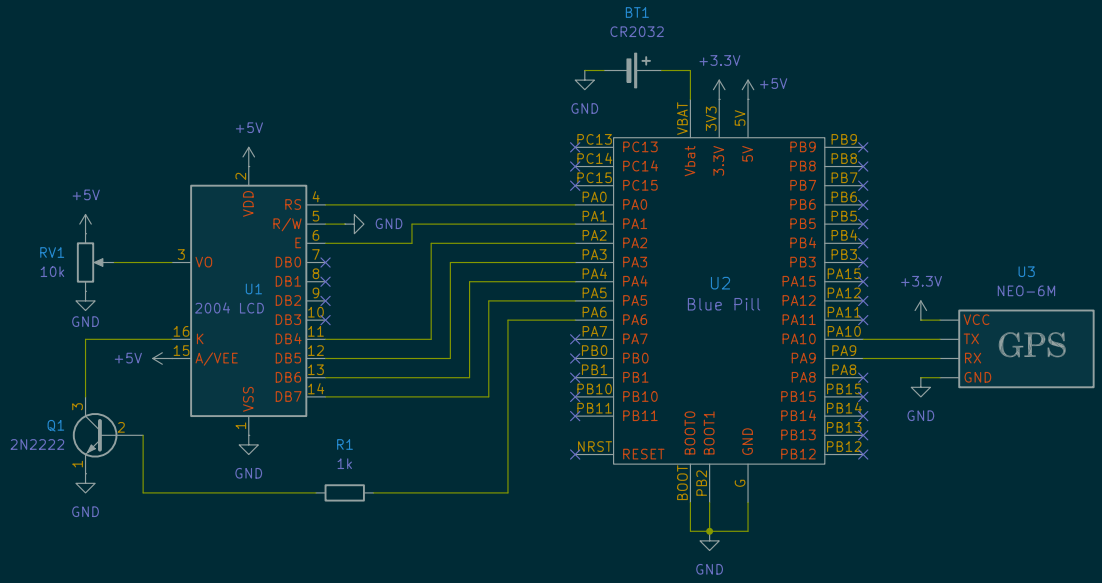

U1 – 20x4 Characters LCD Display
U2 – STM32F103C8T6 Devboard (Blue Pill)
U3 – NEO-6M GPS Module (HW-248)

Sheet: /
File: GPS_Clock.kicad_sch

Title:

Size: A5	Date:	Rev:
KiCad E.D.A. 8.0.9		Id: 1/1