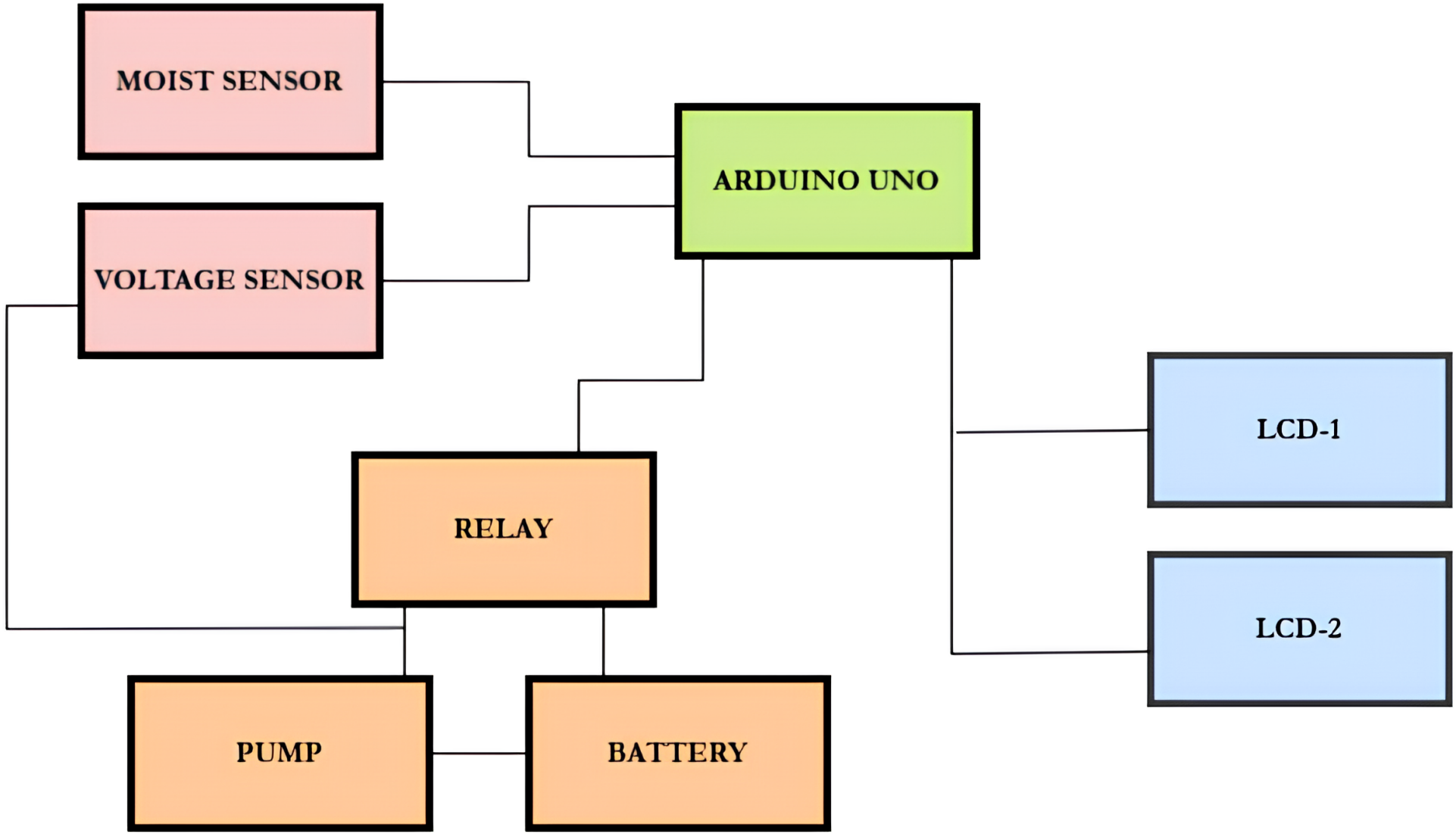
MOIST SENSOR
VOLTAGE SENSOR
ARDUINO UNO
LCD-1
LCD-2
RELAY
PUMP
BATTERY