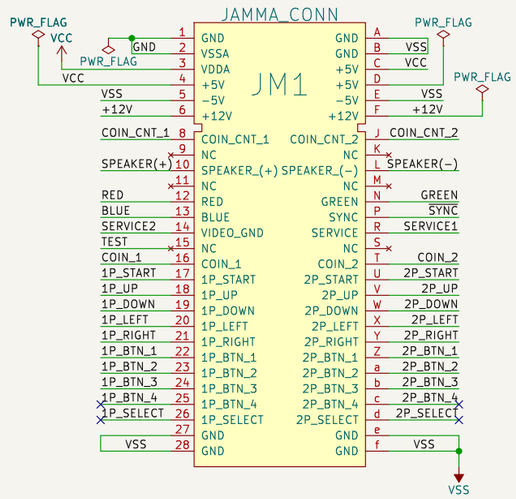

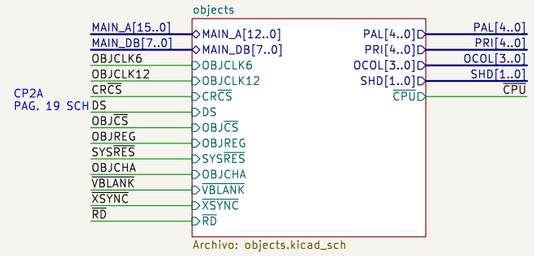

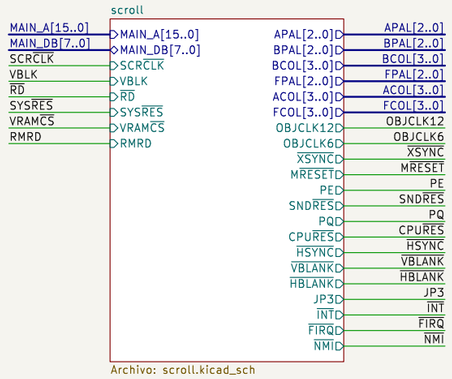

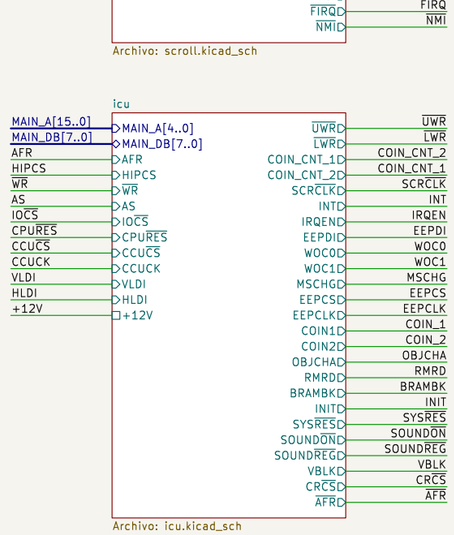

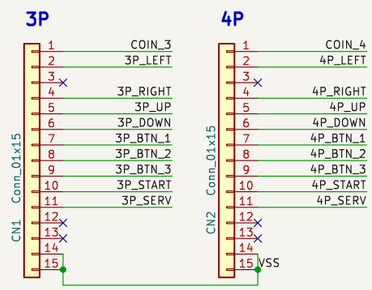

These schematics cover the missing pages in the original ones published by the maker. Signal names existing in the original pages have been preserved. New signal names try to follow the maker style or are taken from similar schematics of the same maker.

JOTEGO
www.patreon.com/jotego
Esperanza Triana
KONAMI PWB352292A

Sheet: /
File: vendetta.kicad_sch

Title: Vendetta

Size: A3	Date: 2023-08-09	**Rev: José Tejada G.**
KiCad E.D.A. kicad-cli 7.0.10-7.0.10-ubuntu20.04.1		Id: 1/4

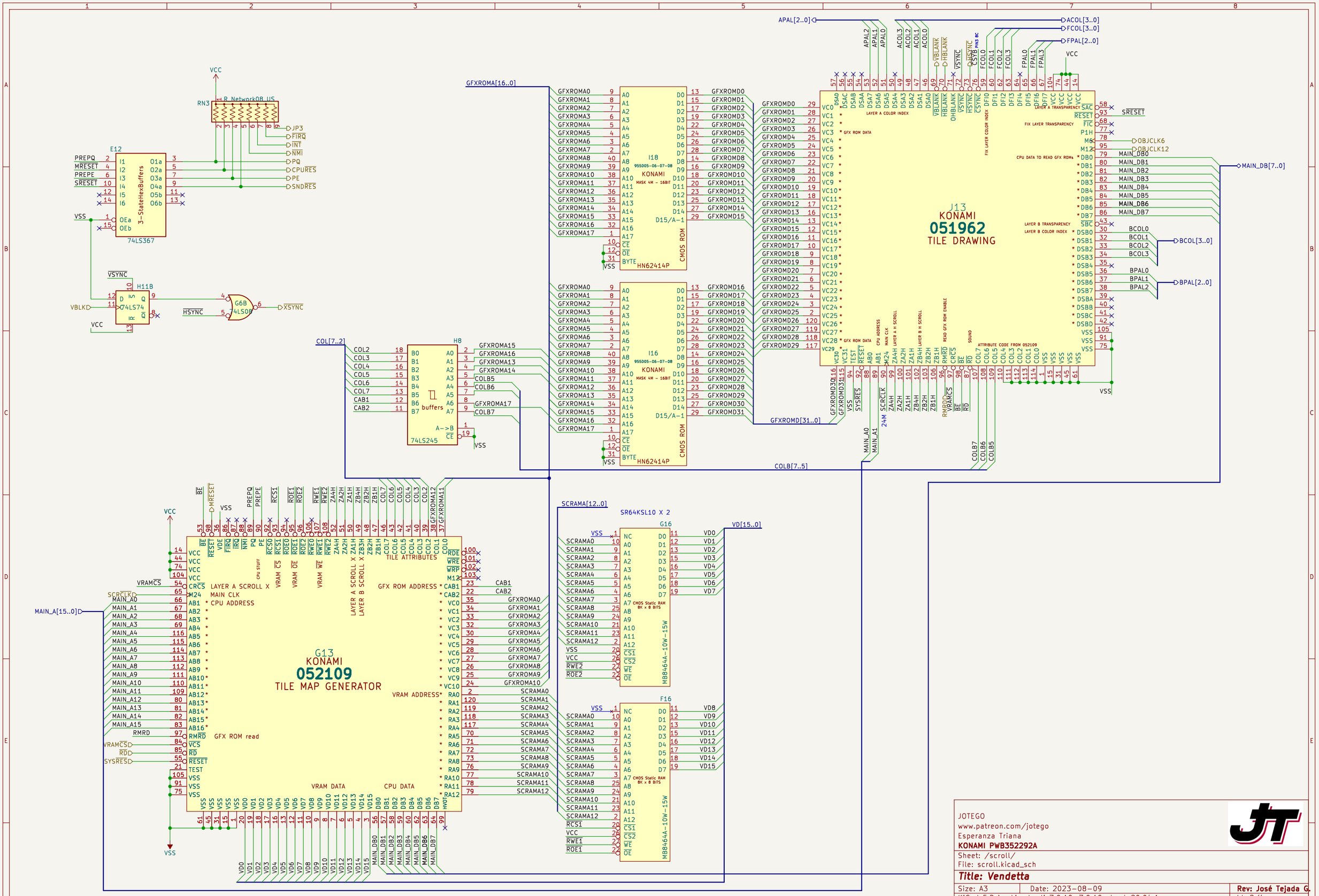
J13
KONAMI
051962
TILE DRAWING
G13
KONAMI
052109
TILE MAP GENERATOR
I18
I16
955D05-06-07-08
KONAMI
MASK 4M - 16BIT
HN62414P
CMOS ROM
H8
74LS245
buffers
E12
74LS367
3-StateHexBuffers
H11B
74LS74
G6B
74LS08
RN3
R_Network08_US
G16
F16
SR64KSL10 X 2
MB8464A-10W-15W
CMOS Static RAM
8K x 8 BITS
APAL[2..0]
ACOL[3..0]
FCOL[3..0]
FPAL[2..0]
GFXROMA[16..0]
GFXROMD[31..0]
COL[7..2]
COLB[7..5]
MAIN_DB[7..0]
BCOL[3..0]
BPAL[2..0]
MAIN_A[15..0]
SCRAMA[12..0]
VD[15..0]
LAYER A COLOR INDEX
GFX ROM DATA
LAYER A TRANSPARENCY
FIX LAYER TRANSPARENCY
FIX LAYER COLOR INDEX
CPU DATA TO READ GFX ROMs
LAYER B TRANSPARENCY
LAYER B COLOR INDEX
ATTRIBUTE CODE FROM 052109
CPU ADDRESS
MAIN CLK
LAYER A H SCROLL
LAYER B H SCROLL
READ GFX ROM ENABLE
SOUND
LAYER A SCROLL X
LAYER A SCROLL X ZA1H
LAYER B SCROLL X ZB3H
TILE ATTRIBUTES
GFX ROM ADDRESS
VRAM ADDRESS
VRAM DATA
CPU DATA
GFX ROM read
CPU STUFF
JOTEGO
www.patreon.com/jotego
Esperanza Triana
KONAMI PWB352292A
Sheet: /scroll/
File: scroll.kicad_sch
Title: Vendetta
Size: A3
Date: 2023-08-09
Rev: José Tejada G.
KiCad E.D.A. kicad-cli 7.0.10-7.0.10-ubuntu20.04.1
Id: 2/4

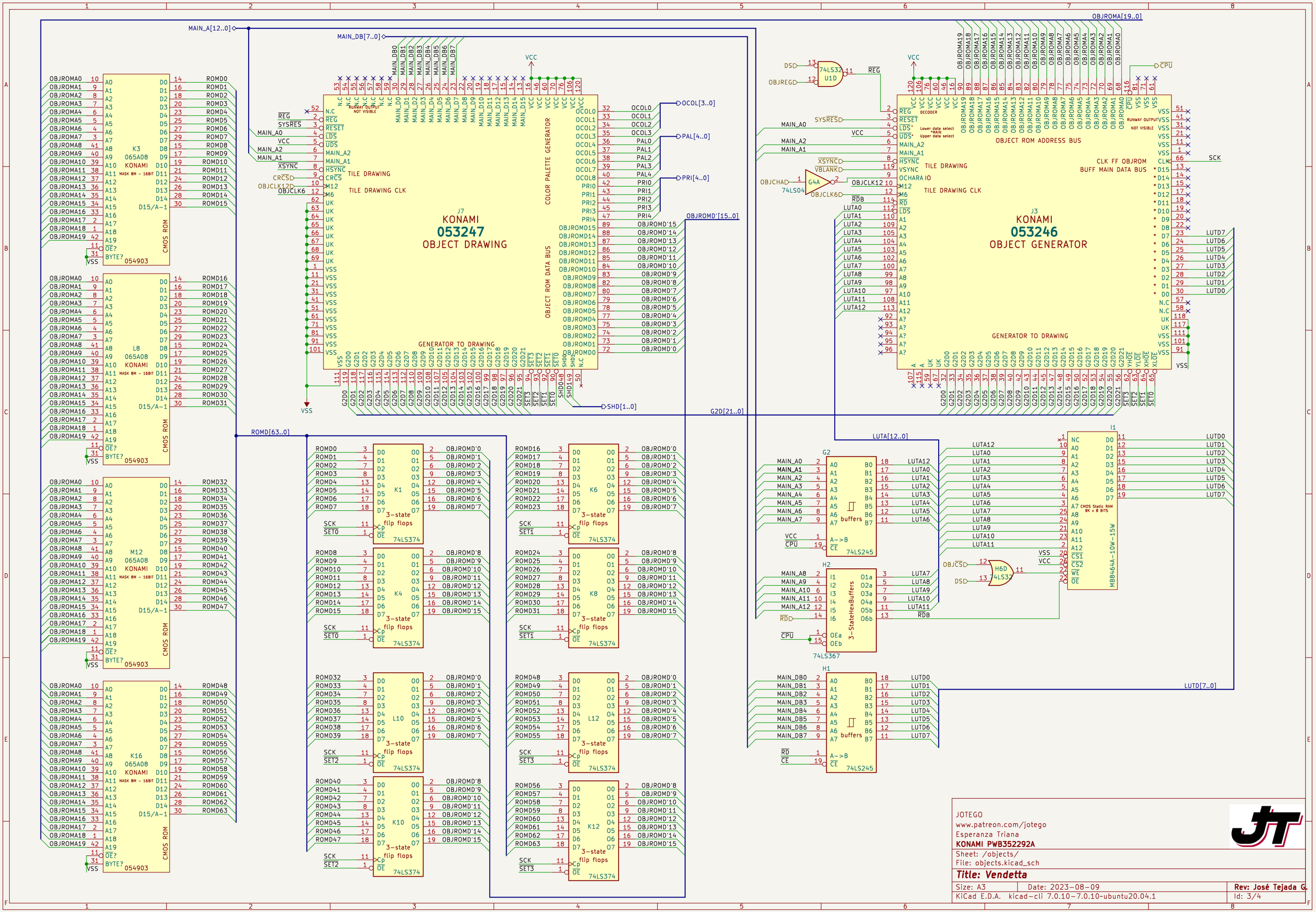

JOTEGO
www.patreon.com/jotego
Esperanza Triana
KONAMI PWB352292A

Sheet: /objects/
File: objects.kicad_sch

Title: Vendetta

Size: A3	Date: 2023-08-09	**Rev: José Tejada G.**
KiCad E.D.A. kicad-cli 7.0.10-7.0.10~ubuntu20.04.1		Id: 3/4

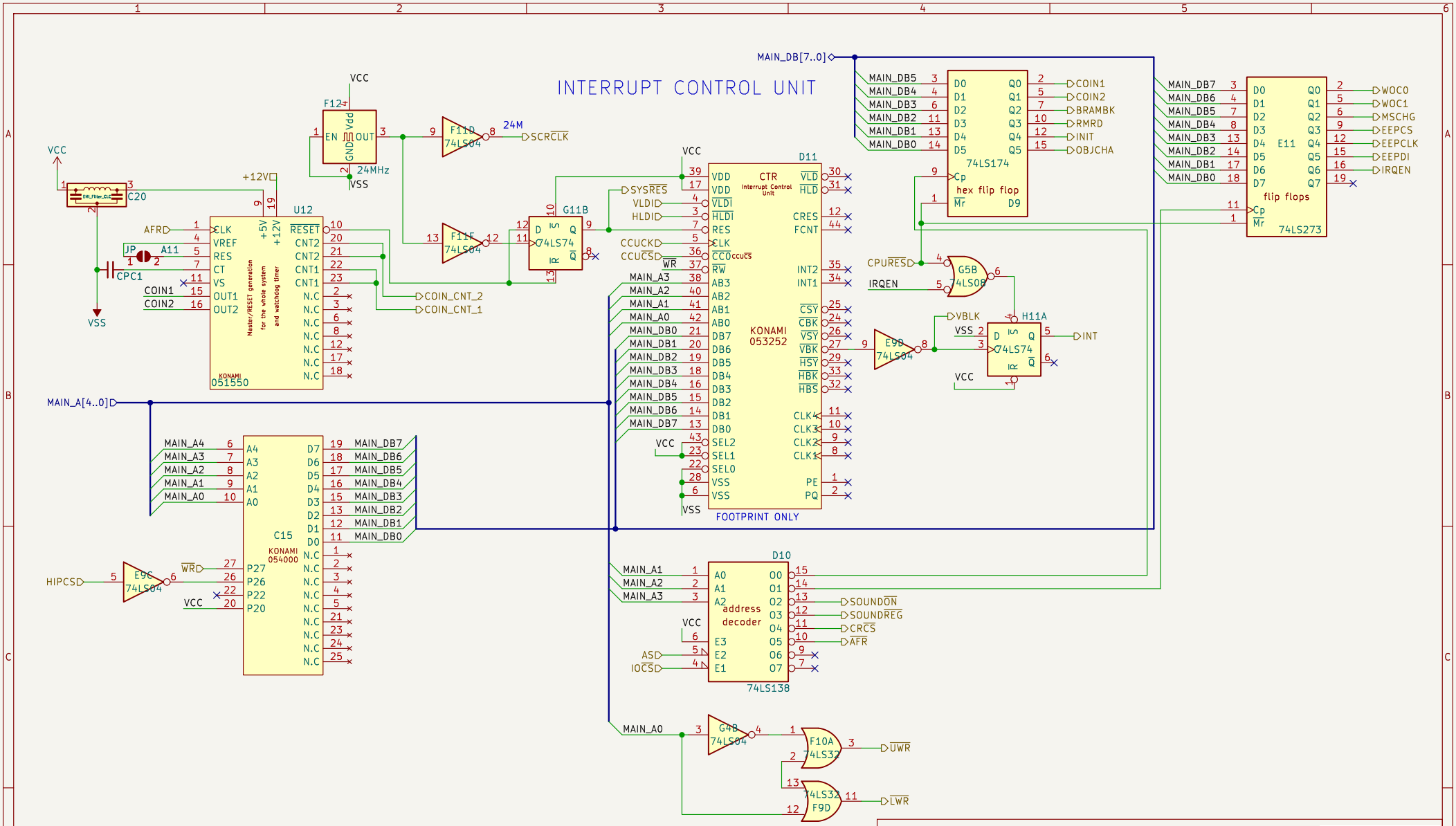

JOTEGO
www.patreon.com/jotego
Esperanza Triana
KONAMI PWB352292A

Sheet: /icu/
File: icu.kicad_sch

Title: Vendetta

Size: A4	Date: 2023-08-09	**Rev: José Tejada G.**
KiCad E.D.A. kicad-cli 7.0.10-7.0.10~ubuntu20.04.1		Id: 4/4