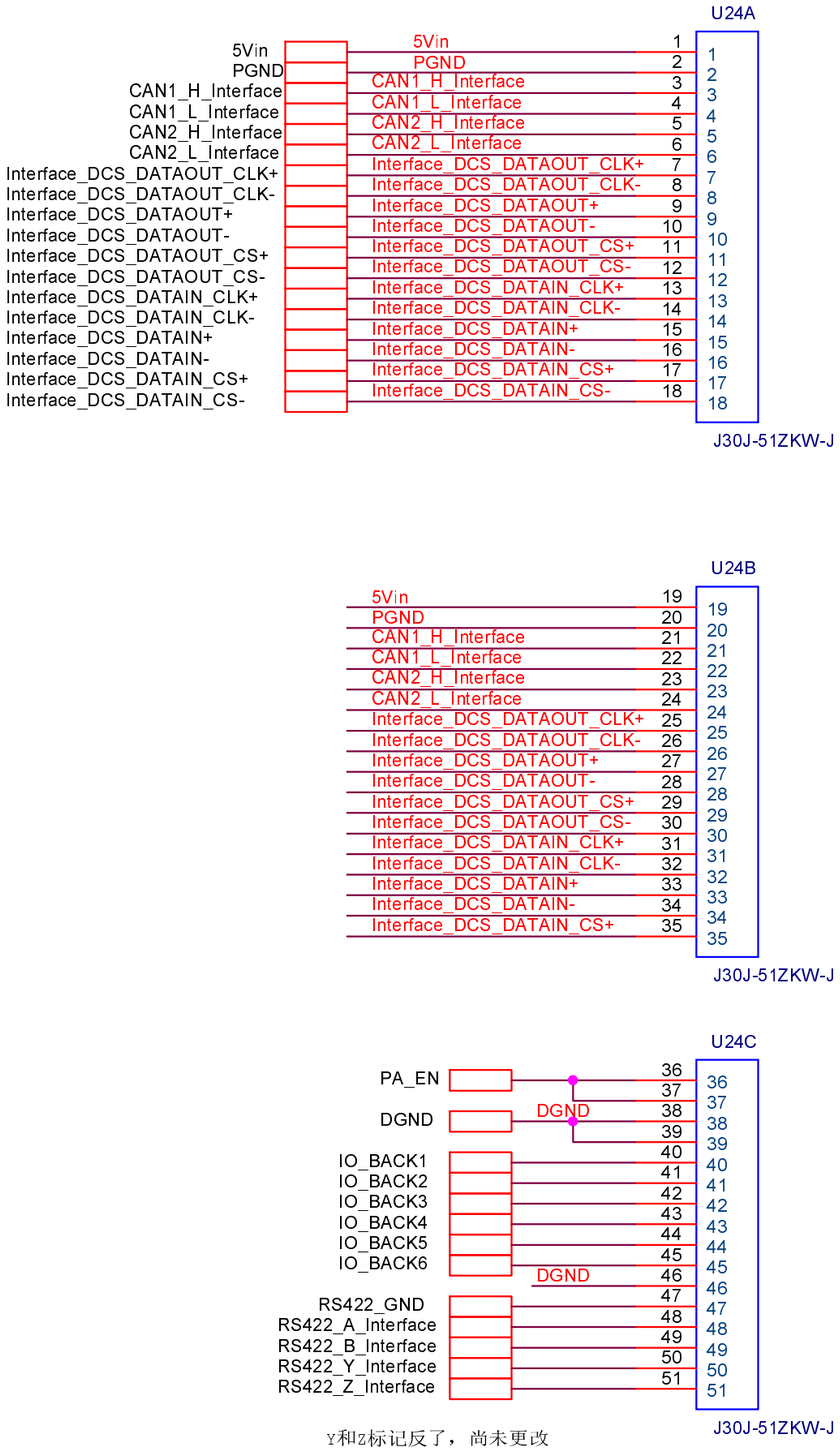

Y和Z标记反了，尚未更改

Title <Title>		
Size A4	Document Number <Doc>	Rev <RevCod
Date: Wednesday, June 01, 2022	Sheet 10 of 14	