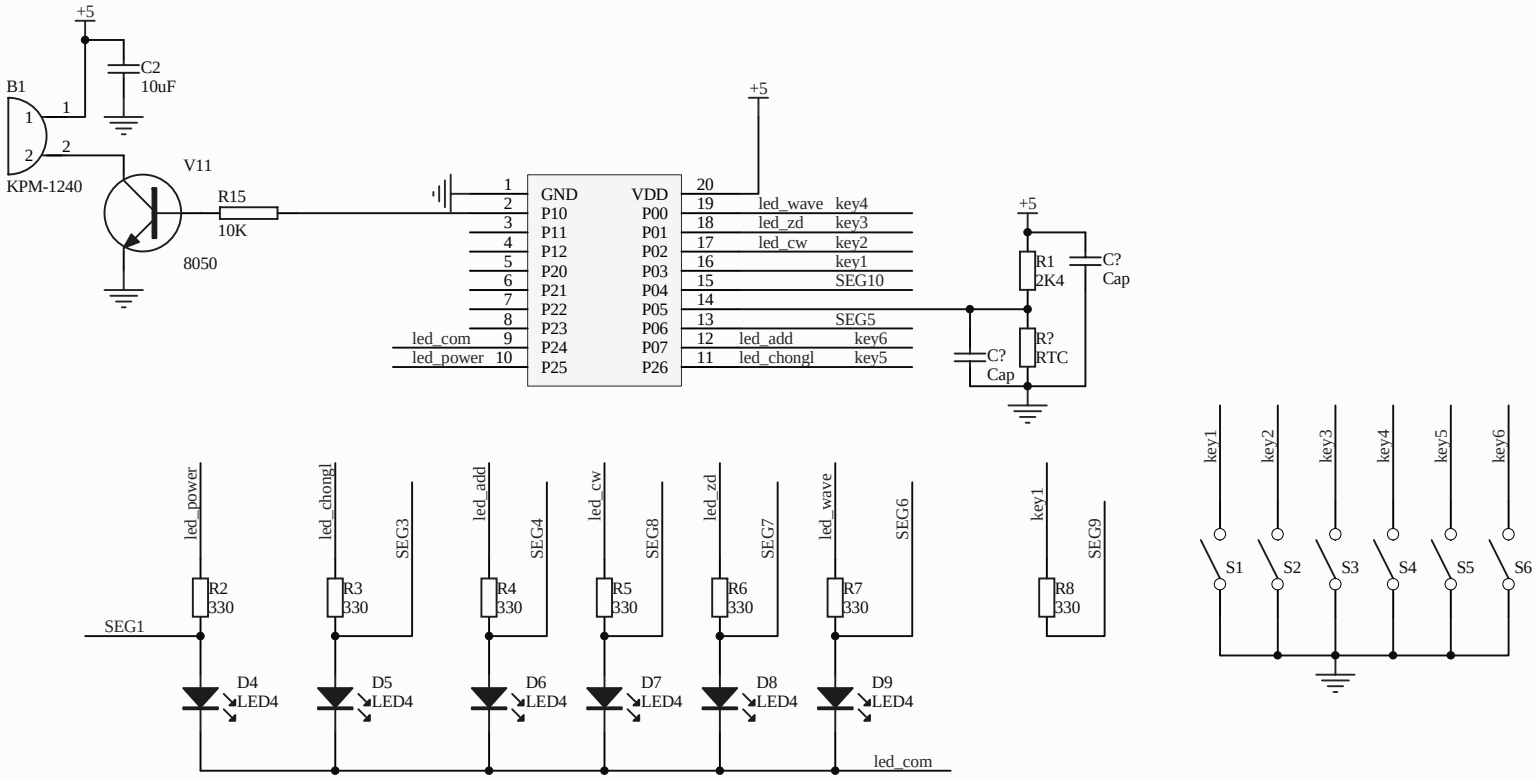

Title		
Size A4	Number	Revision
Date: 2010-8-30	Sheet of	
File: C:\Documents and Settings\..\dy0ly203-1.SchDoc	Drawn By:	