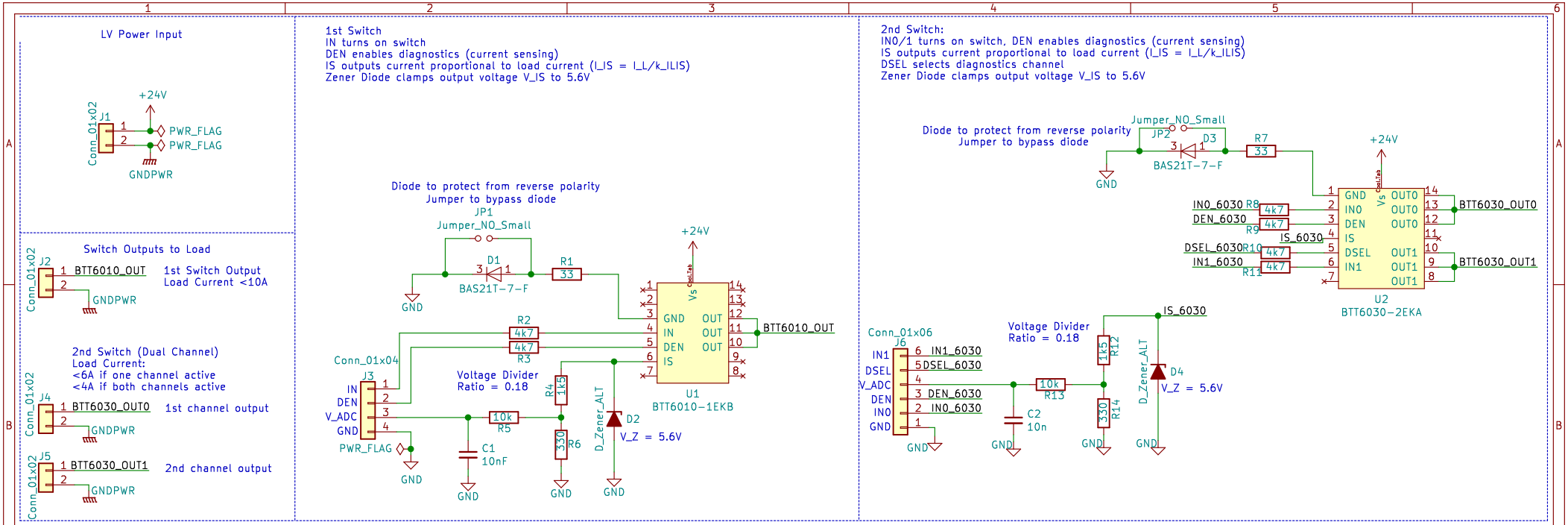

SDU-Vikings

Sheet: /

File: SmartFET-Test.sch

Title: SmartFET Test PCB

Size: A4	Date: 2020-09-10	**Rev: 1.0**
KiCad E.D.A. kicad (5.1.6)-1		Id: 1/1