# Direction motor control using relays

This project is changes motor direction using relays by supplying one side of motor 12v and the other ground for direction 1 and the reverse for direction 2.

By default both terminals receive 12v so the motor is off and if both switches are on the motor receive ground on both so off also.

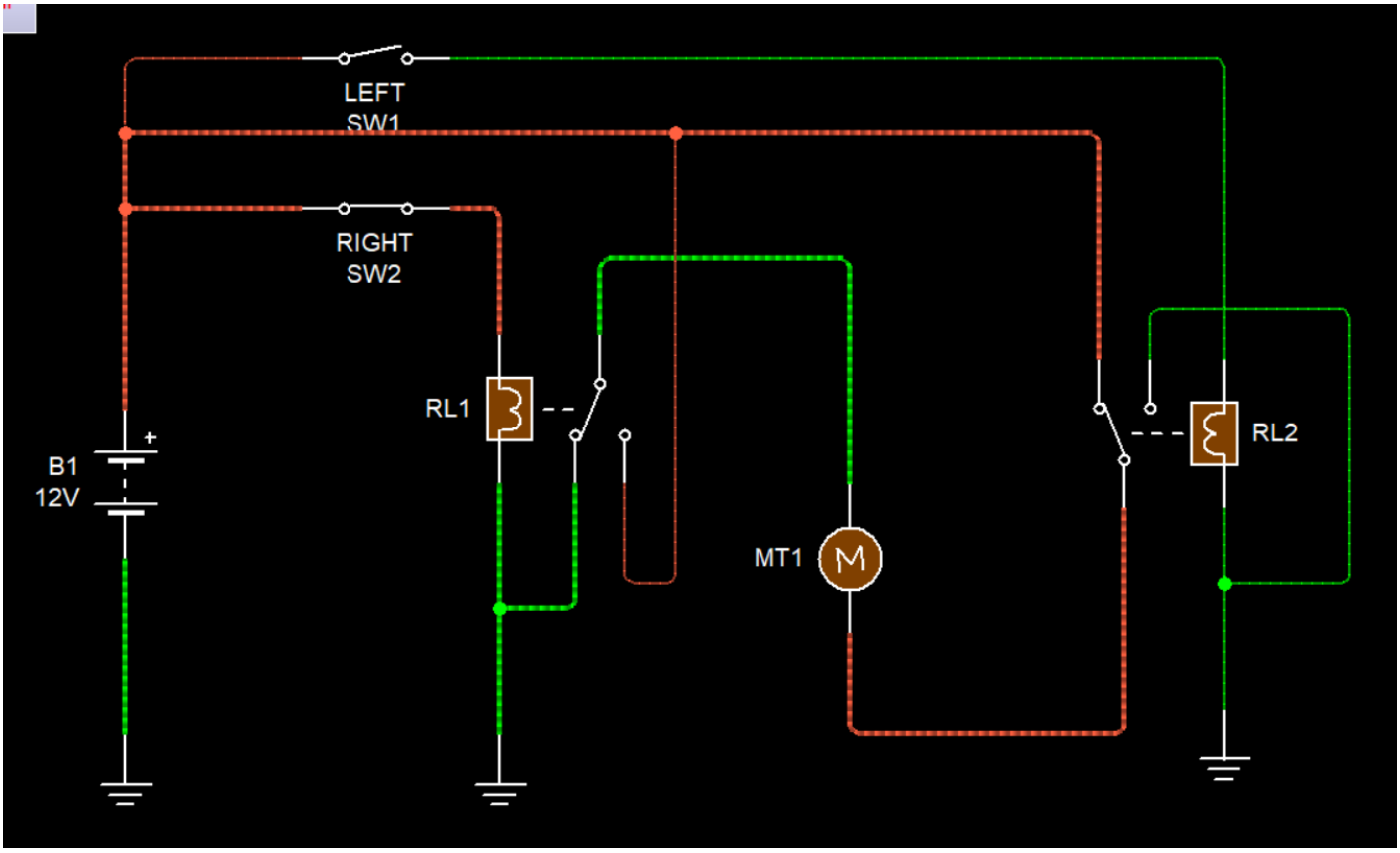

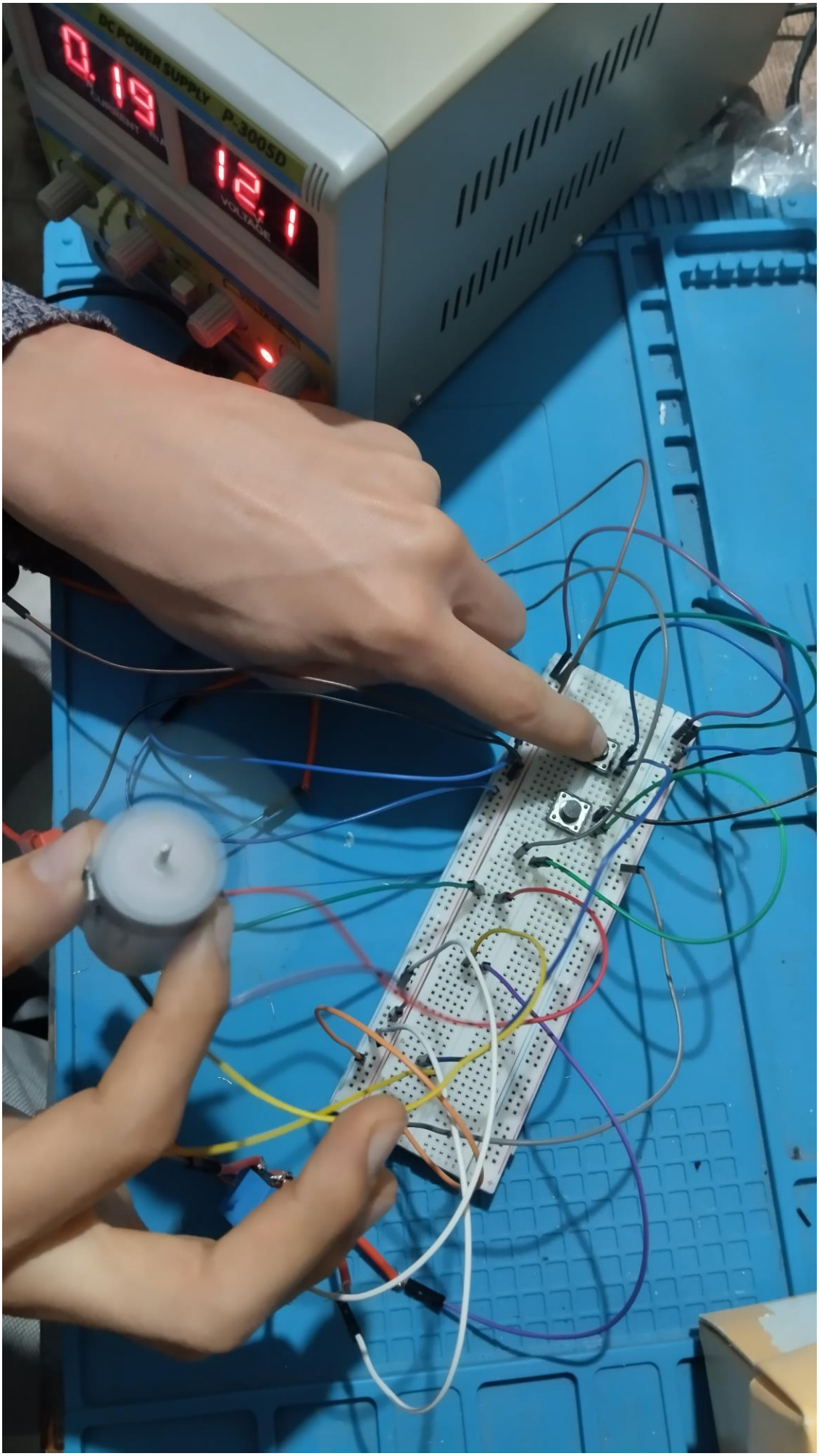
DC POWER SUPPLY
P-3005D
0.19
12.1
VOLTAGE