Low-Cost Lamp Manufacturing Fault Detection System

This project is a 12V lamp current verification circuit designed to detect whether a lamp correctly consumes its rated current (0.11A).

The system uses:

A serie resistor network (6 × 1Ω resistors)

Ohm’s Law (V = I × R)

An NPN transistor as a switching comparator

An indicator LED for pass/fail detection

How It Works

The lamp under test is connected in series with multiple low-value resistors.

If the lamp draws 0.11A, the total voltage across 6Ω becomes:

$V=0.11\times6=0.66V$

This voltage is sufficient to turn ON the transistor ($V_{BE} \approx 0.6–0.7V$), activating the indicator LED.

If the lamp draws less than 0.11A (defective or incorrect manufacturing), the voltage drop is lower than 0.6V, and the transistor remains OFF.

The resistor power dissipation is safely within limits:

0.11 * 0.11* 6 = 0.07WATT

Each 0.25W resistor operates safely.

Use cases:

Manufacturing Quality Control

Automotive Lighting Testing

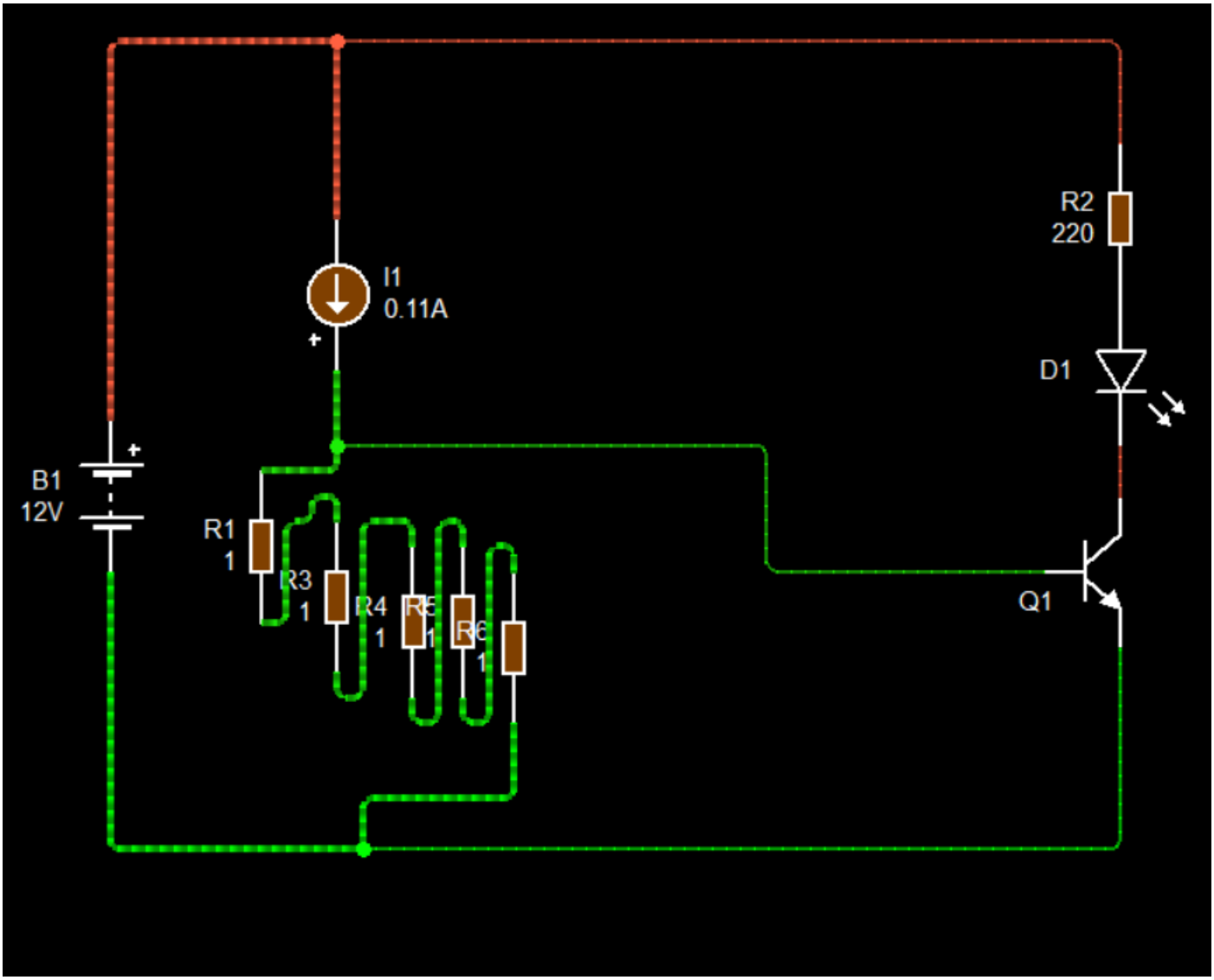

Here the lamp if it uses 0.11A and there is only 5 resistors

So the voltage in transistor will be 0.11 * 5 = 0.55V not enough to turn it on

So if we put 6 resistors and the the led D1 doesn’t turn on the that mean the transistors doesn’t turned on so the lamp is not really consuming 0.11

Lets try it

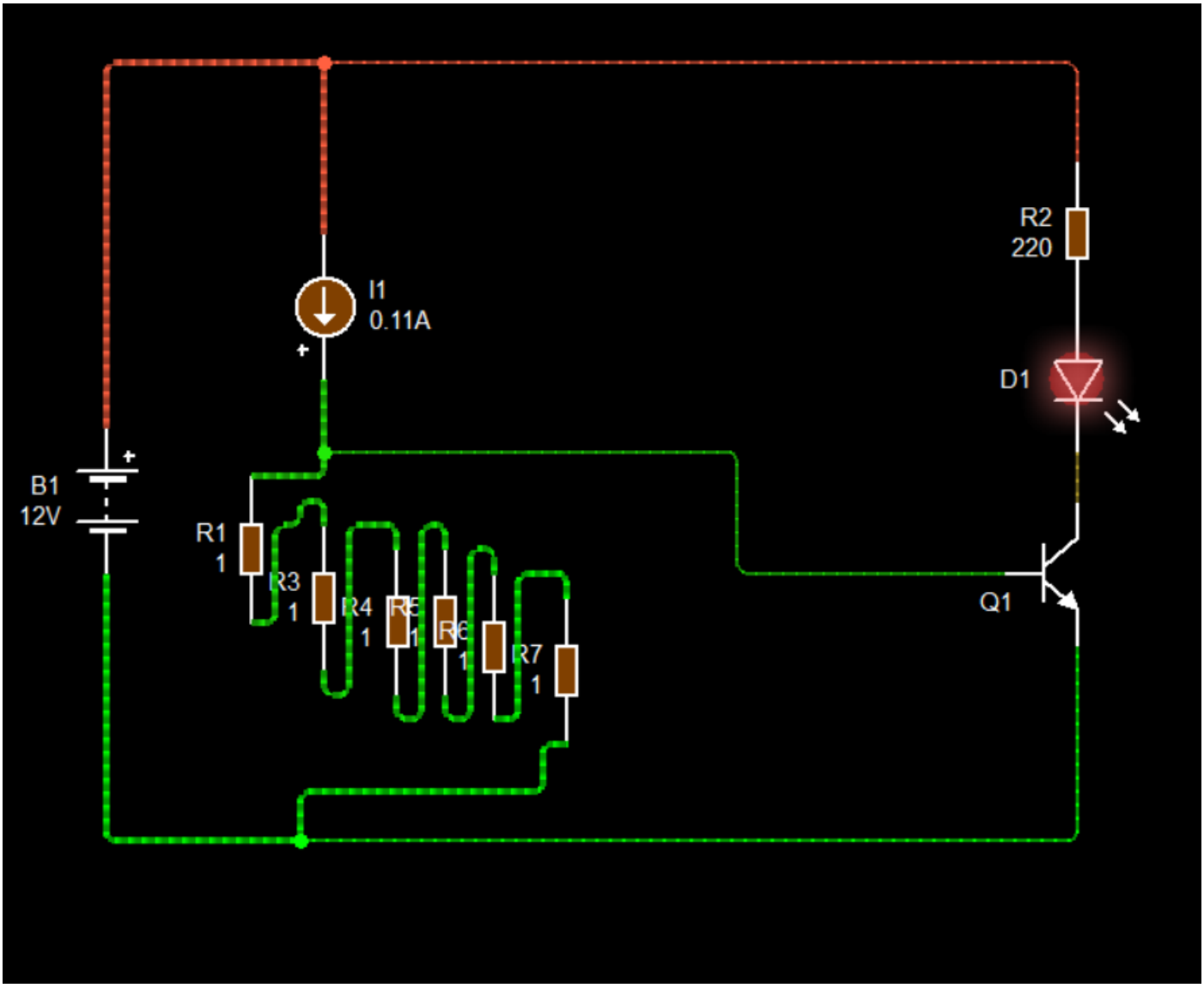

Now the lamp turn on because 0.11 * 6 = 0.66 enough to turn on the transistor

So the lamp is consuming 0.11A

The resistor have .25 Watt power consumption

So the power is 0.11 * 0.11 * 6 = 0.07 WATTT

Each resistor uses 0.07 watt so no problem

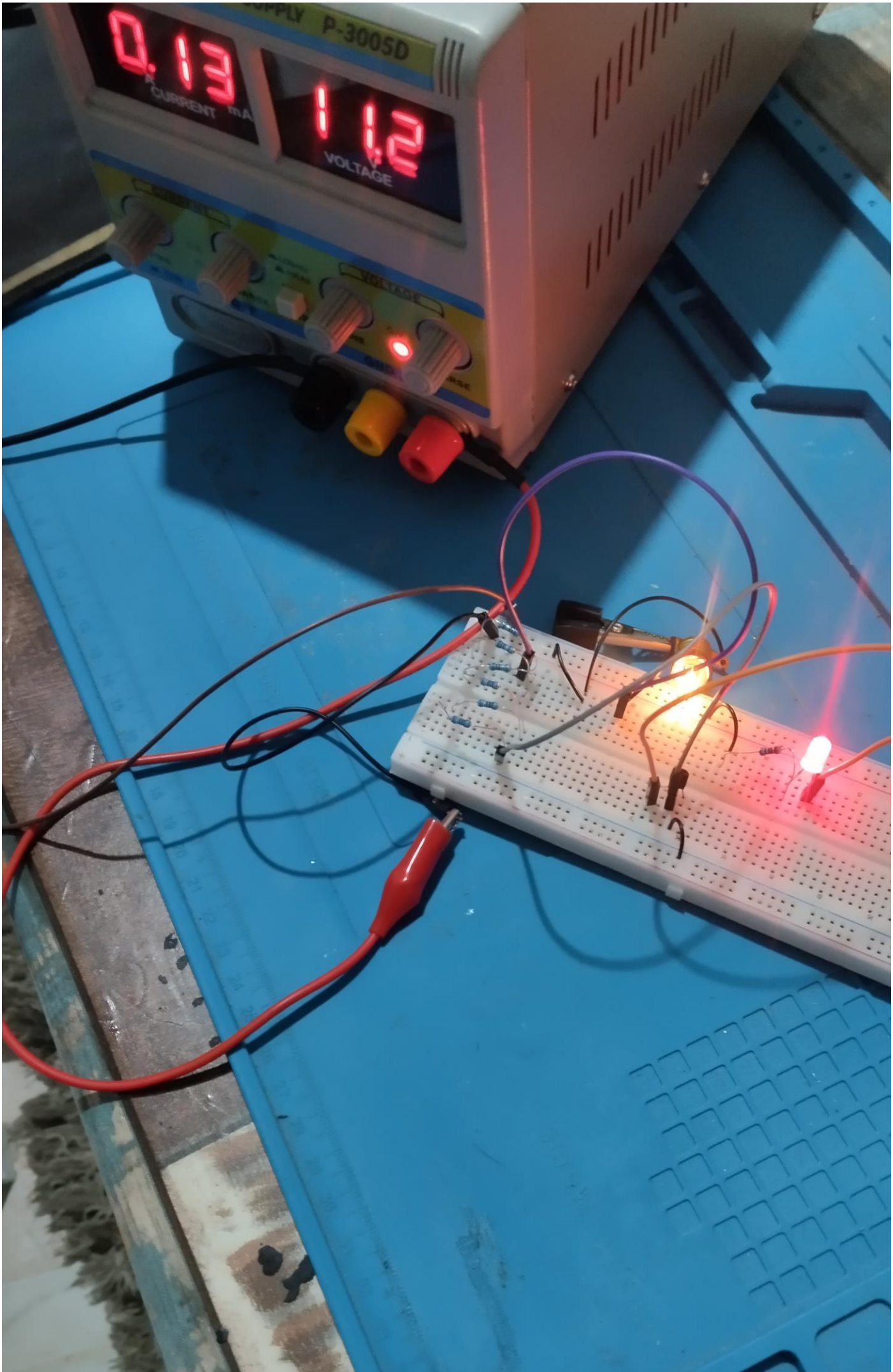
P-3005D
0.13
A
CURRENT
mA
11.2
V
VOLTAGE