NE555 One-Minute Timer Circuit

This project demonstrates a 1-minute timer built using the NE555 Timer IC in a monostable configuration. When the push button SW1 is pressed, the timer is triggered and the output (pin 3) goes HIGH for a fixed time period. During this interval the LED turns ON, and after approximately 60 seconds, the timer automatically resets and the LED turns OFF.

The timing duration is determined by the RC network composed of R3, R2, and C1.

⏱️ Timer Equation

The pulse duration of a 555 timer in monostable mode is calculated using:

T = 1.1RC

Where:

- **T** = output pulse duration (seconds)
- **R** = timing resistance (ohms)
- **C** = timing capacitance (farads)

For this circuit:

- $R = R3 + R2 = 500k\Omega + 47k\Omega \approx 547k\Omega$
- $C = 100\mu F$

So the approximate time is:

$$T = 1.1 \times 547000 \times 100 \times 10^{-6}$$

$$T \approx 60\ seconds$$

This means the LED remains ON for roughly **one minute after the trigger button is pressed**.

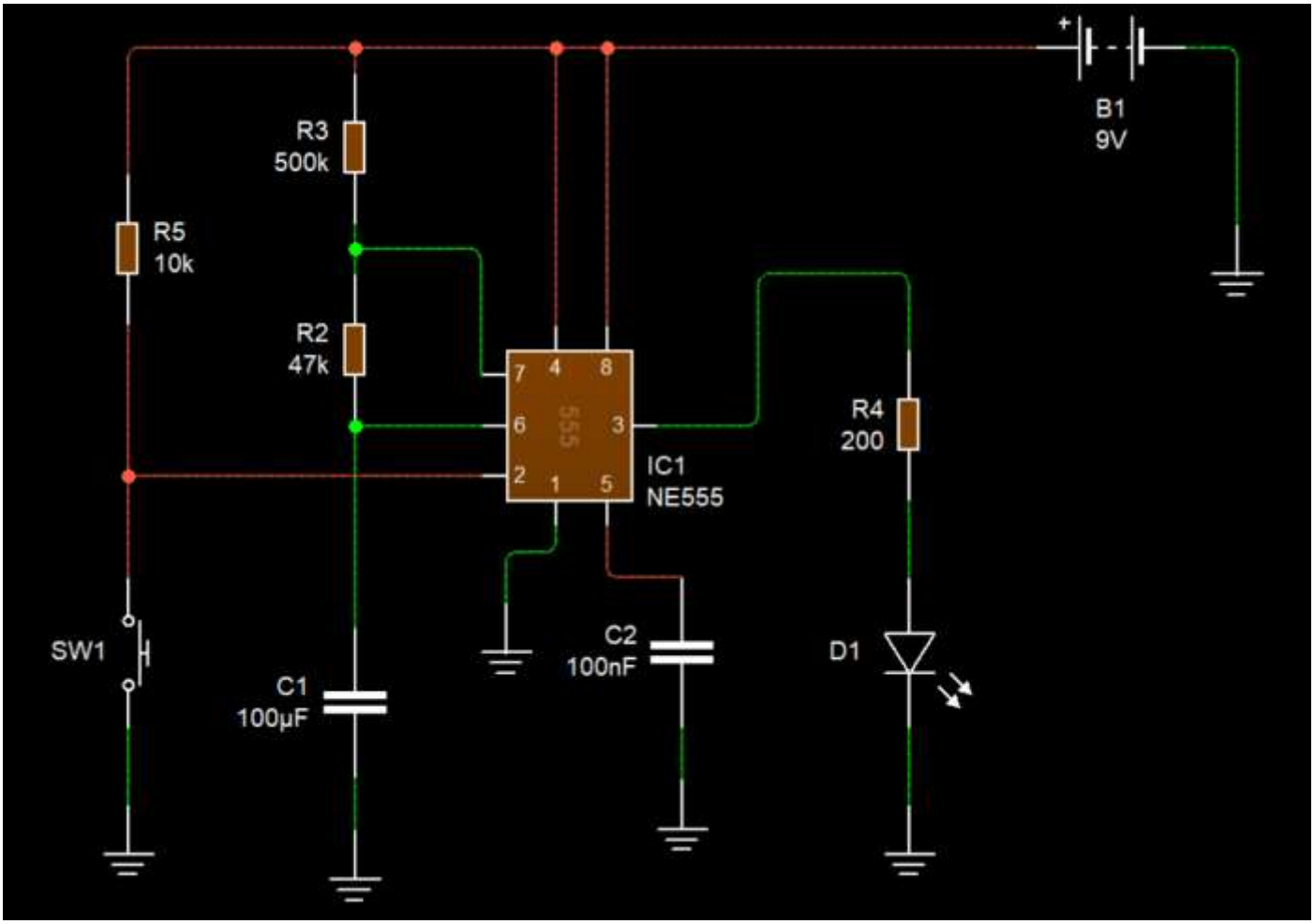
B1
9V
R3
500k
R5
10k
R2
47k
IC1
NE555
R4
200
SW1
C1
100µF
C2
100nF
D1

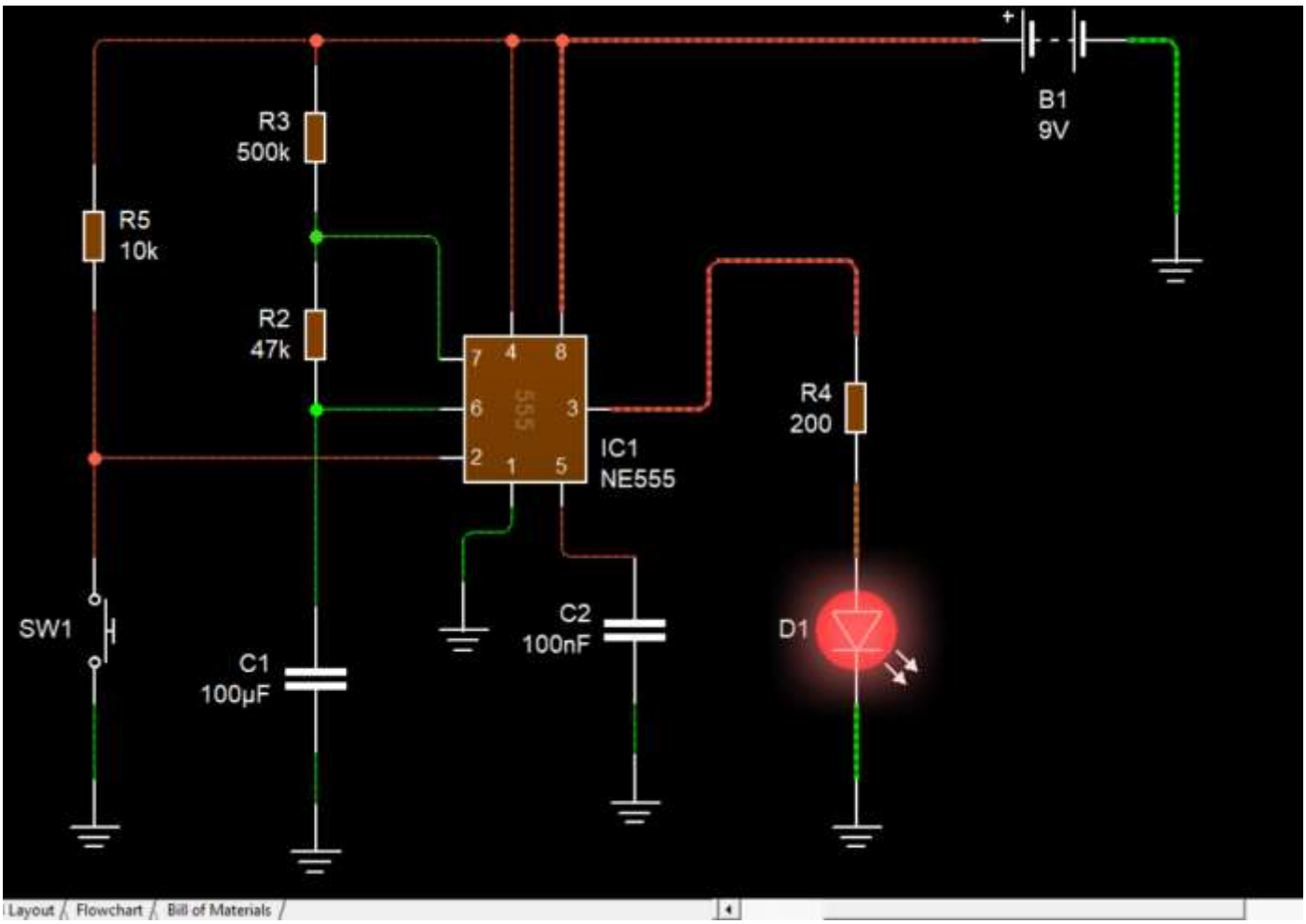
B1
9V
R3
500k
R5
10k
R2
47k
IC1
NE555
R4
200
SW1
C1
100µF
C2
100nF
D1
Layout
Flowchart
Bill of Materials

Why a 500kΩ Resistor (R3) is Used

The 500kΩ resistor plays an important role in reducing standby current consumption.

Reasons:

-- Lower charging current

A large resistance limits the current flowing into the timing capacitor.

-- Power efficiency

When the LED is OFF and the circuit is idle, the current through the timing network is very small.

-- Longer timing with minimal power loss

Using a large resistor allows the circuit to reach long delays without requiring very large capacitors.

This makes the circuit more energy efficient, especially for battery-powered applications.

This type of timer circuit can be used in:
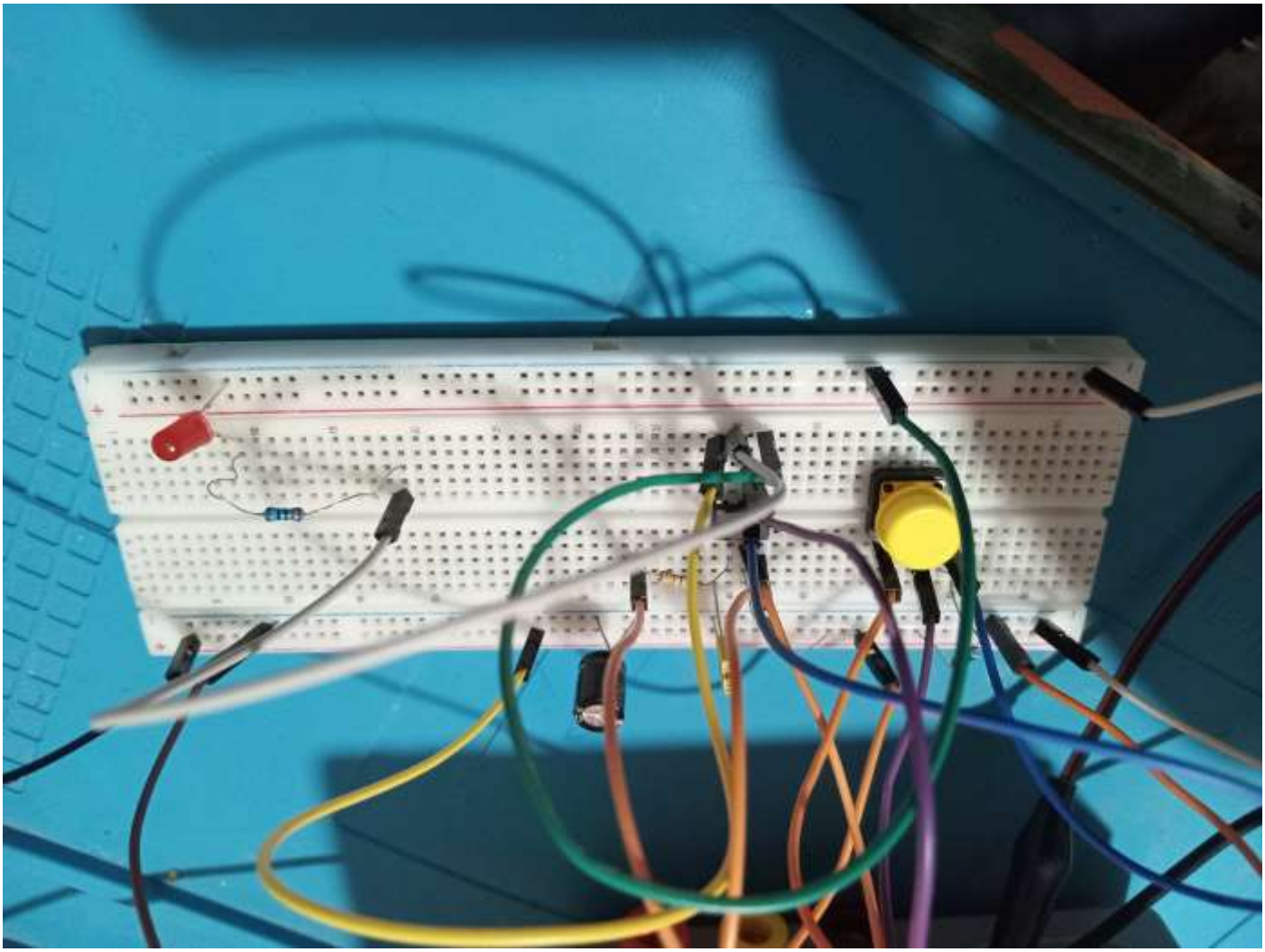
- Automatic light timers
- Delay circuits
- Power-saving indicators
- Alarm or alert timing