Temperature-Controlled Motor System Using a Schmitt Trigger Circuit

This project demonstrates a temperature-controlled switching system built using a Schmitt Trigger transistor circuit. The circuit uses a temperature sensor and multiple transistor stages, allowing stable switching between two temperature thresholds.

The system is designed so that:

At 20 °C, the circuit activates a relay, turning ON a motor and an indicator LED.

When the temperature reaches 35 °C, the circuit switches OFF, stopping the motor and LED.

The Schmitt Trigger configuration prevents unstable switching near the threshold, ensuring reliable operation even with small temperature fluctuations.

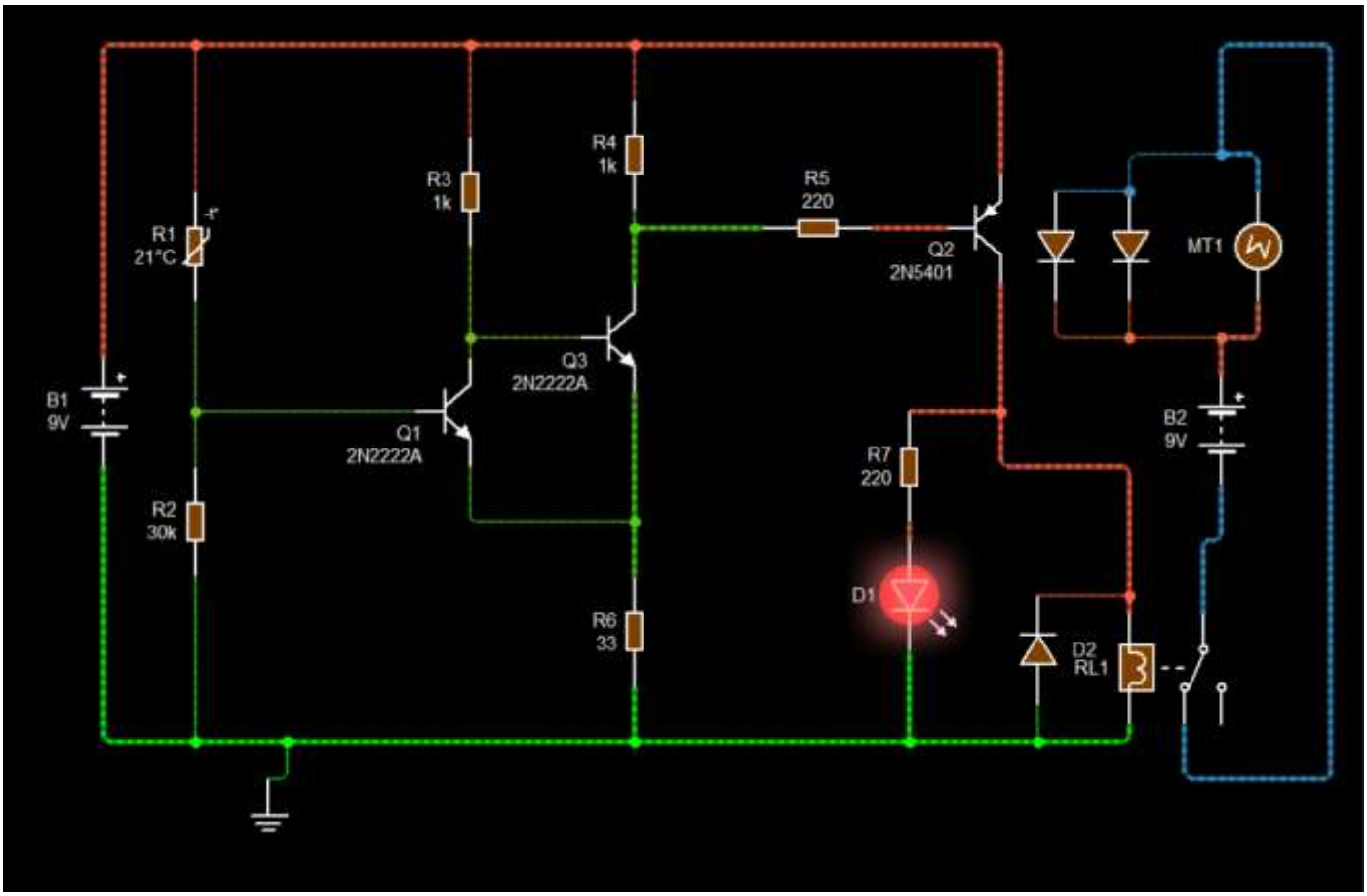

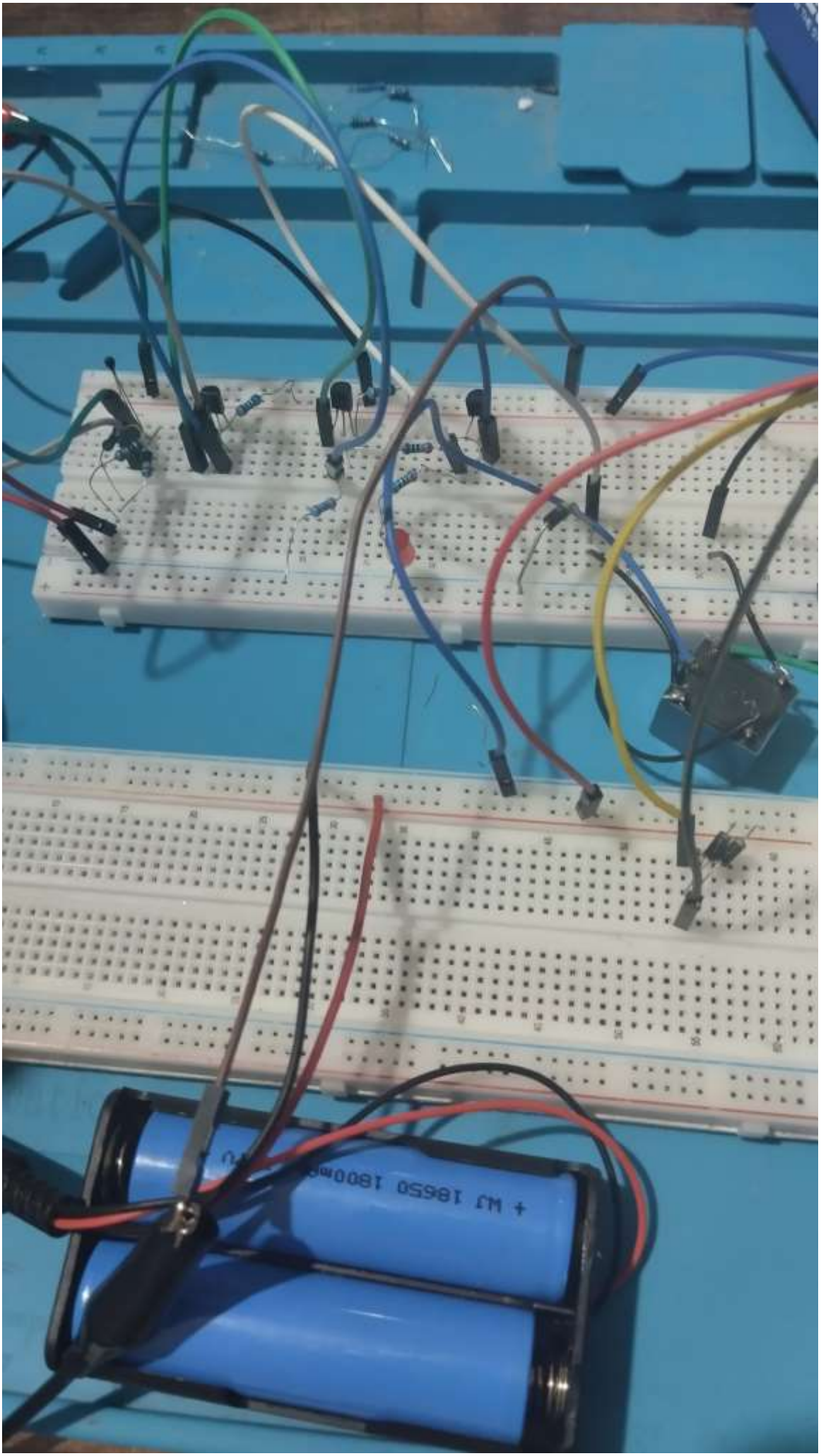
+ WJ 18650 1800mA