Transistor-Based Bistable Latch Circuit (ON/OFF Memory Switch)

This project is a bistable latch circuit built using two NPN transistors, designed to act as a simple electronic memory switch. The circuit allows a load (LED in this case) to remain ON or OFF even after the push button is released.

How It Works

1. SW2 (ON button) momentarily triggers Q2, which activates Q1.
2. Once Q1 turns ON, it keeps itself biased through the feedback network (R2 and R4).
3. This creates a latching effect, meaning the LED stays ON even after releasing the ON button.
4. SW1 (OFF button) interrupts the base drive of Q1, breaking the feedback loop and turning the LED OFF.
5. R1 limits LED current.
6. R2 and R4 provide base biasing and feedback.
7. R3 sets proper biasing for Q2.

Powered by a 9V supply, this circuit demonstrates:

- Transistor switching
- Positive feedback
- Bistable memory operation
- Electronic push-button ON/OFF control without a relay

This type of circuit can be used in:

- Soft power switches
- Toggle control systems
- Basic memory elements
- Embedded electronics projects

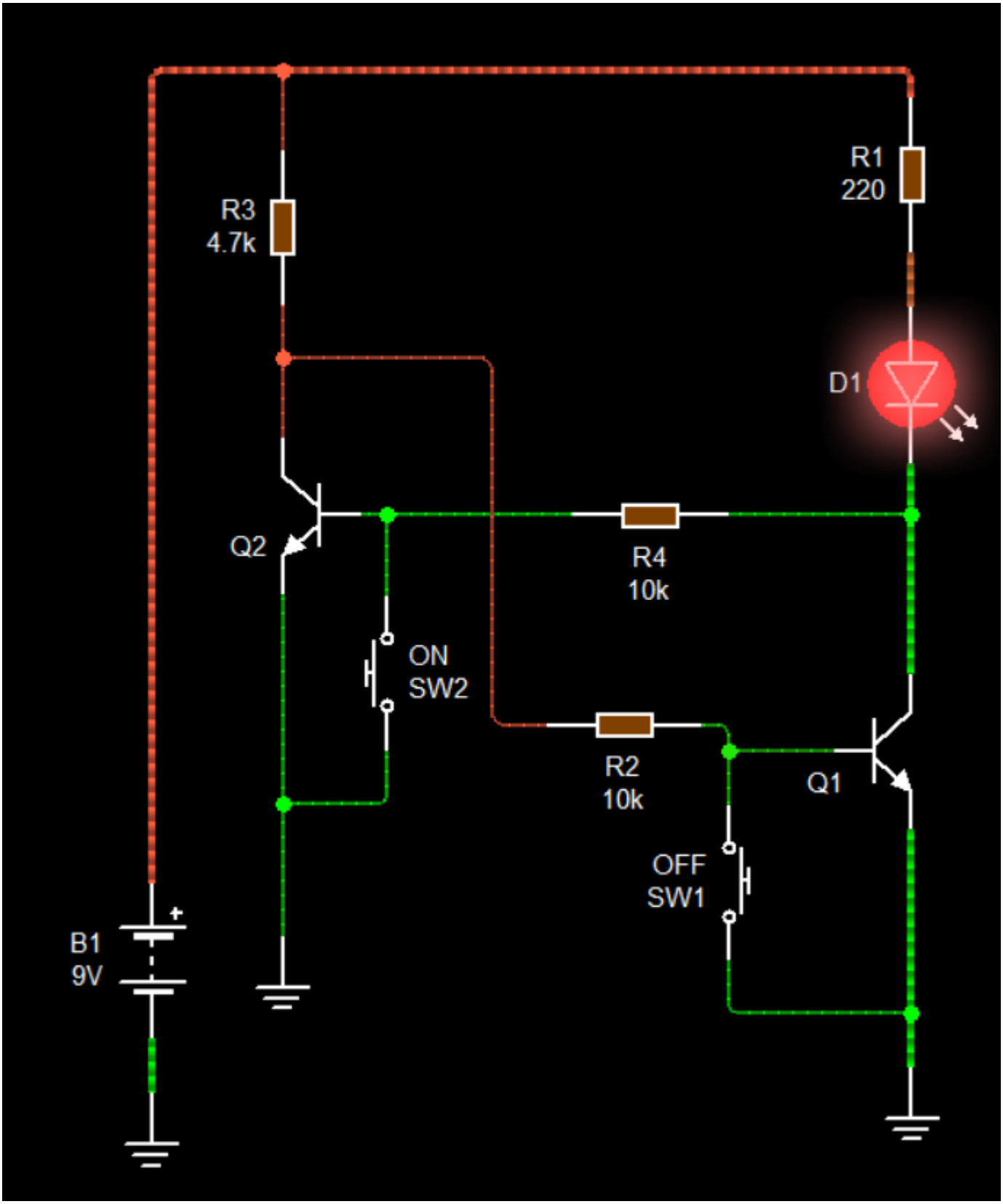
R1
220
R3
4.7k
D1
Q2
R4
10k
ON
SW2
R2
10k
Q1
OFF
SW1
B1
9V
+

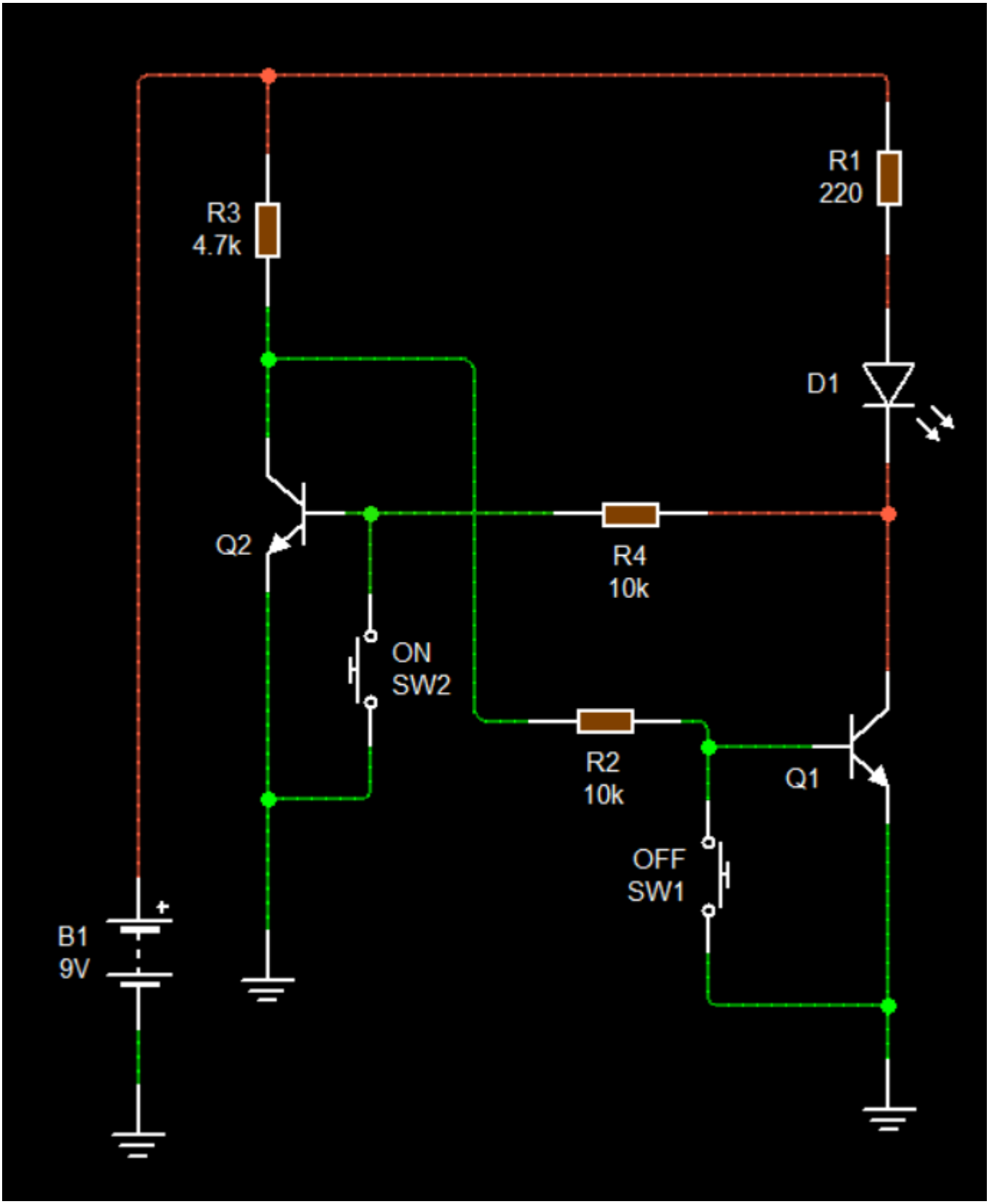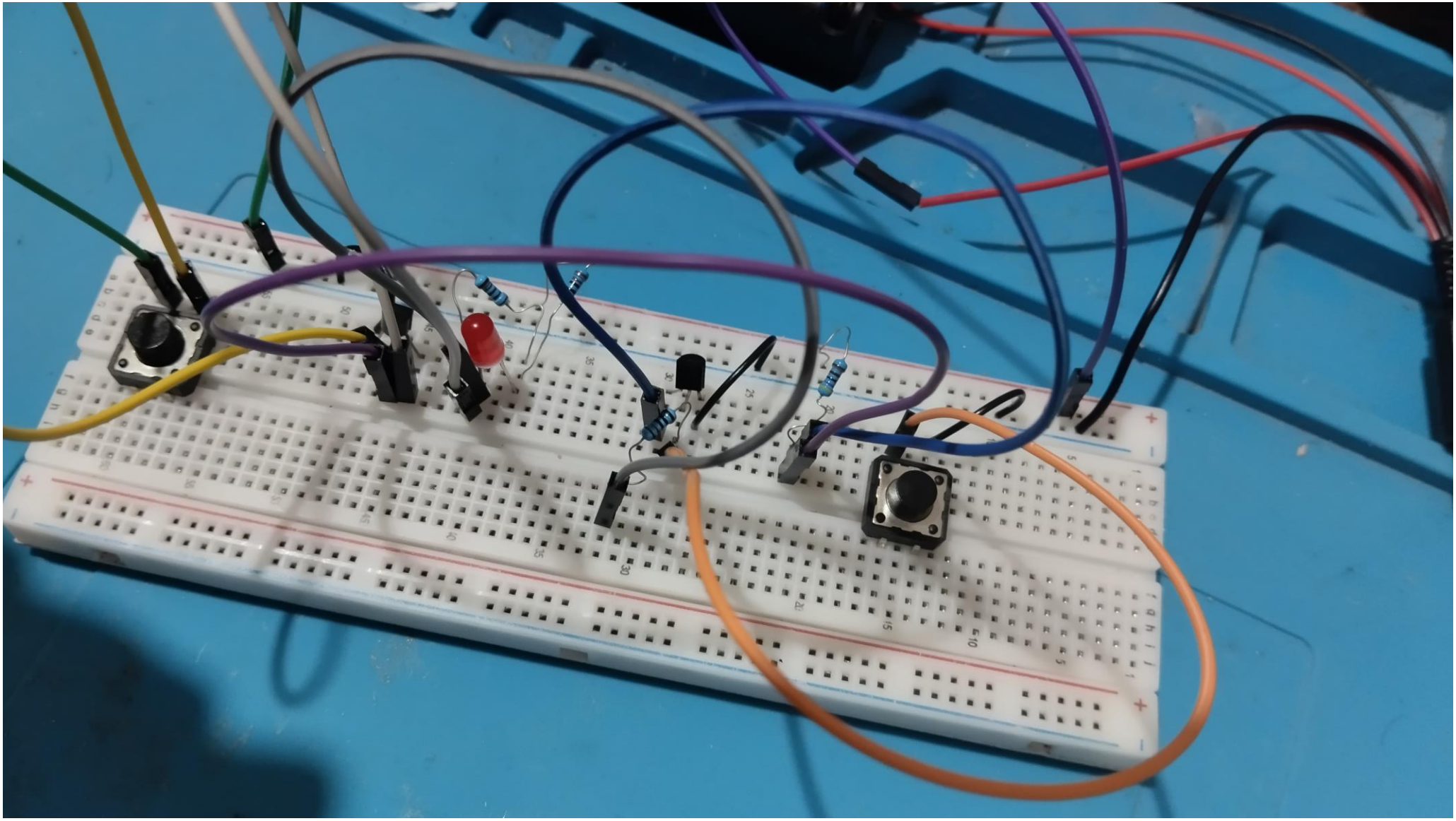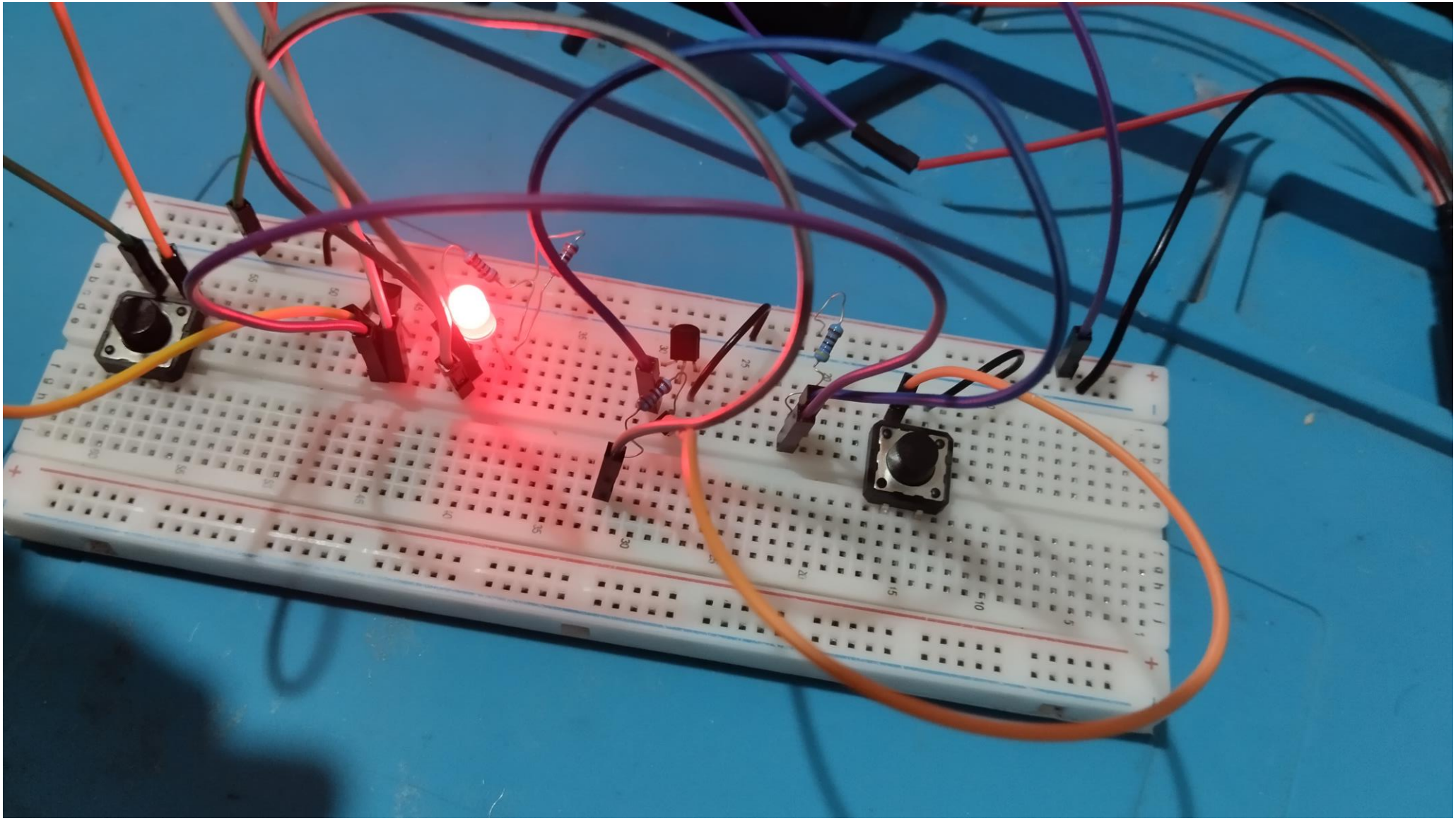
R1
220
R3
4.7k
D1
Q2
R4
10k
ON
SW2
R2
10k
Q1
OFF
SW1
B1
9V