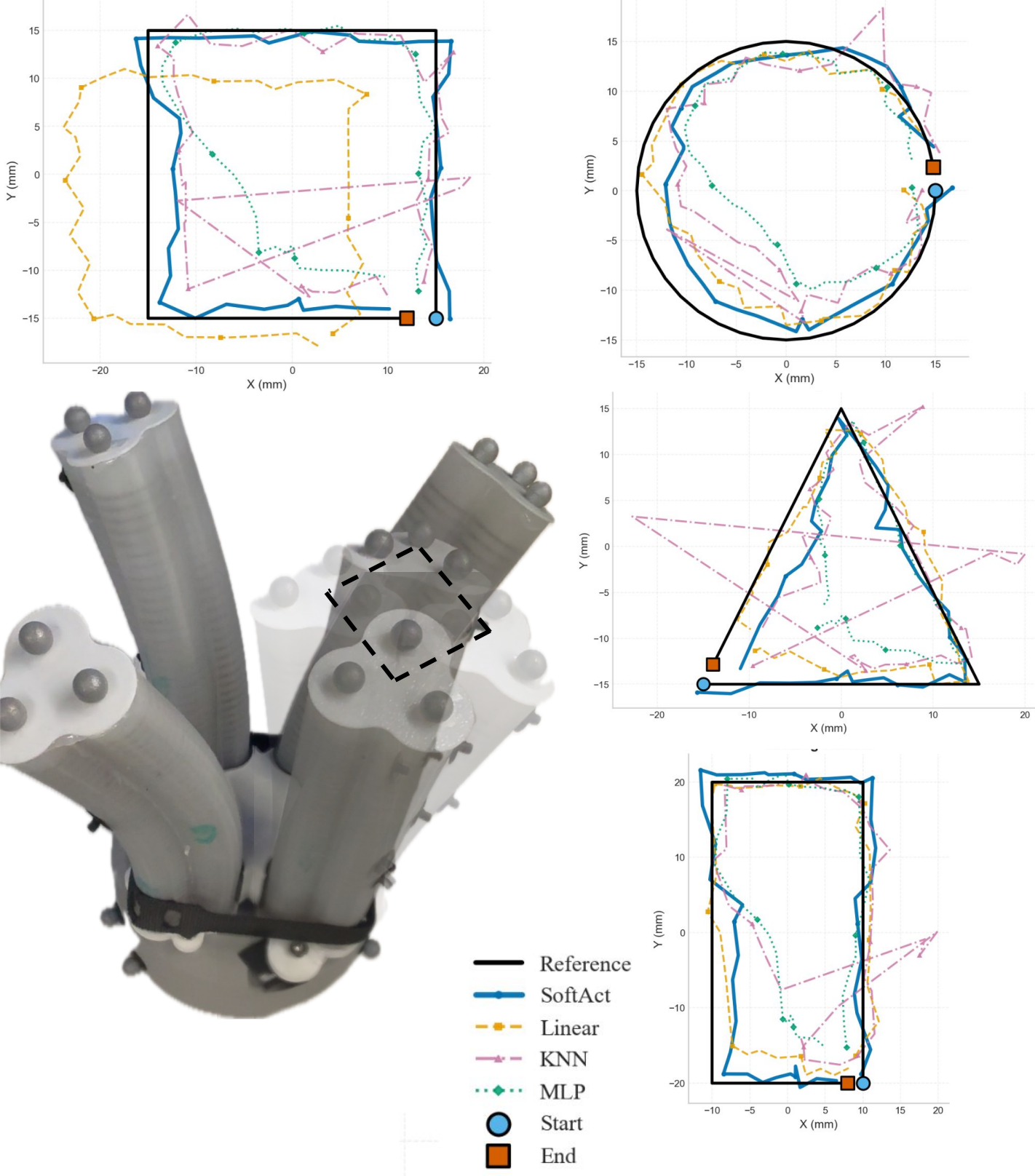
Y (mm)
X (mm)
Reference
SoftAct
Linear
KNN
MLP
Start
End