Prob. 1:

What must be the coefficient of friction between the gripping surfaces of the tongs and the mass m to prevent slipping?

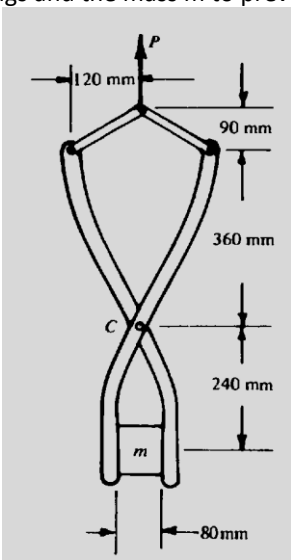

Prob. 2:

A 40-kg packing crate must be moved to the left along the floor without tipping. Knowing that the coefficient of static friction between the crate and the floor is 0.35, determine (a) the largest allowable value of α, (b) the corresponding magnitude of the force P. [Ans: α = 58.11°, P =166.4 N]

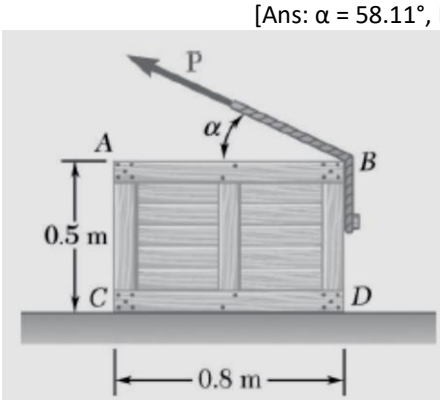

Prob. 3:

The three flat blocks are positioned on the 30^0 incline as shown, and a force P parallel to the incline is applied to the middle block. The upper block is prevented from moving by a wire which attaches it to the fixed support. The coefficient of static friction for each of the three pairs of mating surfaces is shown. Determine the maximum value which P may have before any slipping takes place.

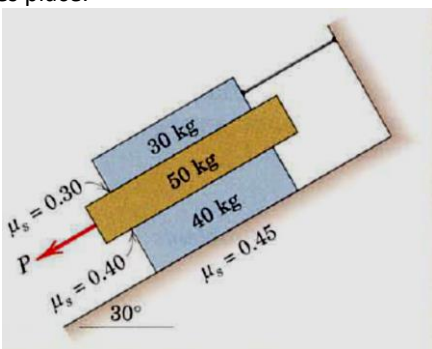

Prob. 4:

Determine the force *P* required to move the uniform 500 *N* plank from its rest position shown in Fig. , if the co-efficient of friction at both contact location = 0.5.

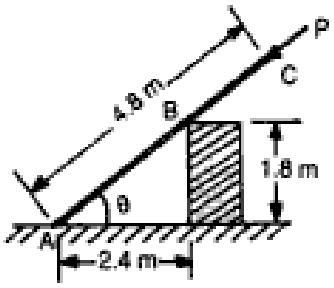

Prob. 5:

The 3 identical rollers are stacked on a horizontal surface as shown. If coefficient of static friction μ_s is same for all pairs of contacting surfaces, find the minimum value of μ_s for which the rollers will not slip. [Ans. μ_s=0.268]

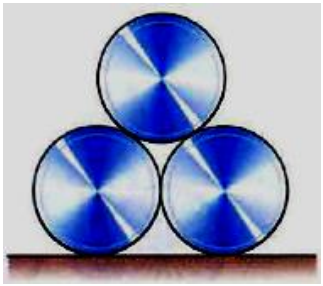

Prob. 6:

A 15° wedge is forced under a 50-kg pipe as shown. The coefficient of static friction at all surfaces is 0.20. (a) Show that slipping will occur between the pipe and the vertical wall. (b) Determine the force P required to move the wedge. [Ans. P=283 N]

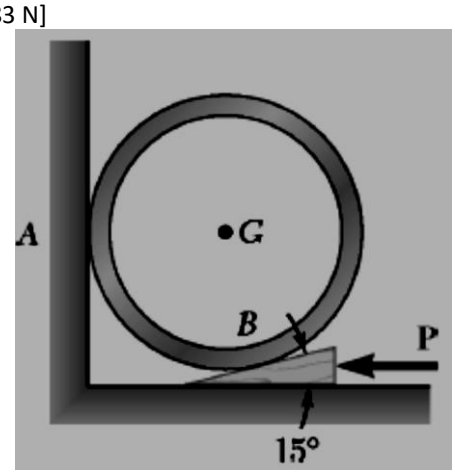

Prob. 7:

The uniform slender bar of length l is placed in the opening of width d at the 30° angle shown. For what range of l/d will the bar remain in static equilibrium? The coefficient of static friction at A and B is μ_s = 0.40.

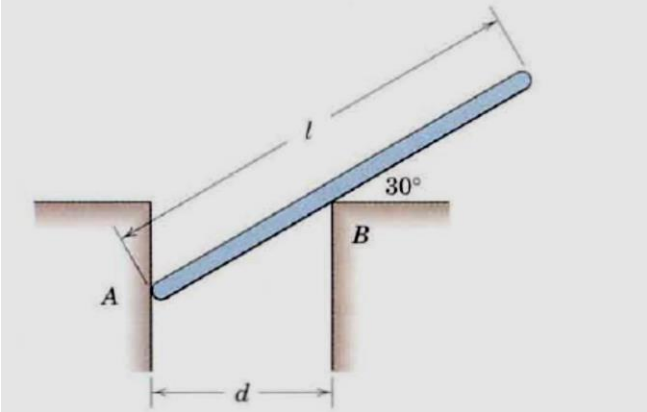

Prob. 8: A 108 wedge is to be forced under end B of the 5-kg rod AB. Knowing that the coefficient of static friction is 0.40 between the wedge and the rod and 0.20 between the wedge and the floor, determine the smallest force P required to raise end B of the rod. [Ans: P=67.4 N]

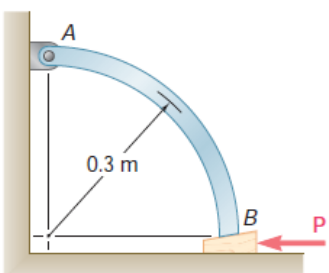

Prob. 9:

Calculate the horizontal force P required to raise the 100-kg load. The coefficient of friction between the rope and the fixed bars is 0.40.

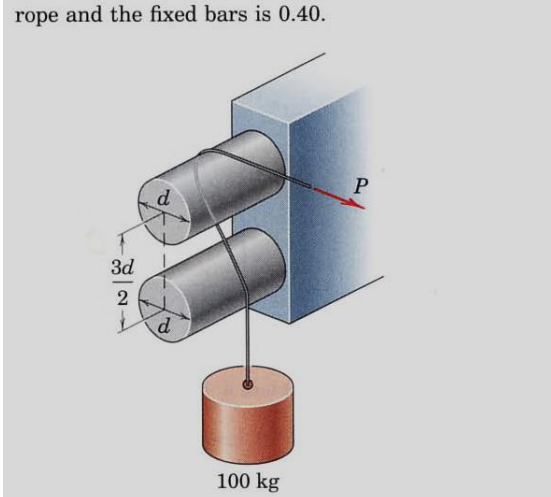

Prob. 10:

Determine the range of cylinder mass m for which the system is in equilibrium. The coefficient of friction between the 50-kg block and the incline is 0.15 and that between the cord and cylindrical support is 0.25.

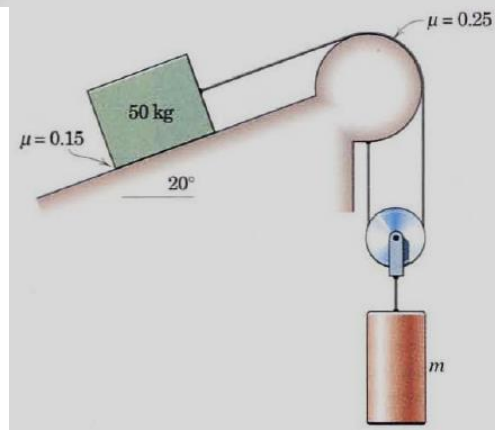

Prob. 11:

The 180-lb rock climber is lowered over the edge of the cliff by his two companions, who together exert a horizontal pull T of 75 lb on the rope. Compute the coefficient of friction μ between the rope and the rock.

Ans. μ = 0.699

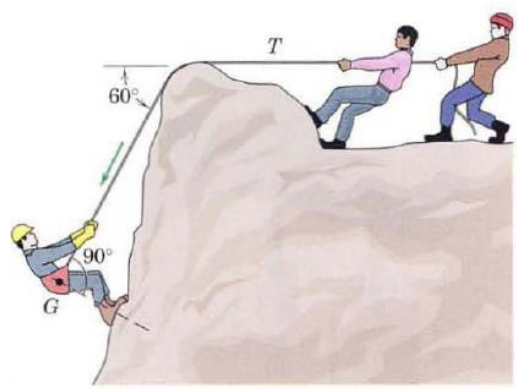

Prob. 12:
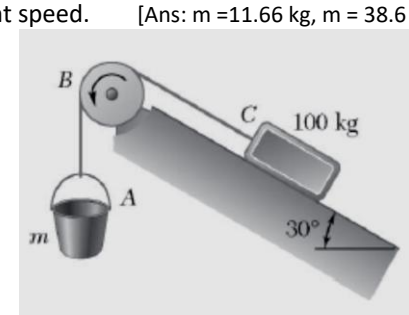
Bucket A and block C are connected by a cable that passes over drum B. Knowing that drum B rotates slowly counterclockwise and that the coefficients of friction at all surfaces are μ_s = 0.35 and μ_k = 0.25, determine the smallest combined mass m of the bucket and its contents for which block C will (a) remain at rest, (b) start moving up the incline, (c) continue moving up the incline at a constant speed. [Ans: m =11.66 kg, m = 38.6 kg, m = 34.4 kg]