Torsion

Date: 23 May, 2023

Prob.1: The electric motor exerts a 500 N.m-torque on the aluminum shaft *ABCD* when it is rotating at a constant speed. Knowing that *G*= 27 GPa and that the torques exerted on pulleys *B* and *C* are as shown, determine the angle of twist between (*a*) *B* and *C*, (*b*) *B* and *D*. (Ans: 1.384^0, 3.22^0)

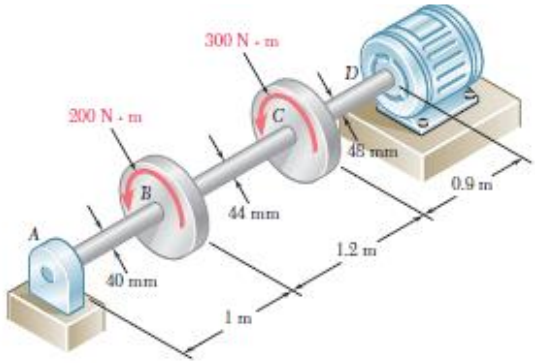

Prob. 2: A hole is punched at A in a plastic sheet by applying a 600-N force P to end D of lever CD, which is rigidly attached to the solid cylindrical shaft BC. Design specifications require that the displacement of D should not exceed 15 mm from the time the punch first touches the plastic sheet to the time it actually penetrates it.
Determine the required diameter of shaft BC if the shaft is made of a steel with G= 77 GPa and $\tau_{allowable} = 80\ MPa$.
(Ans: d=22.5mm)

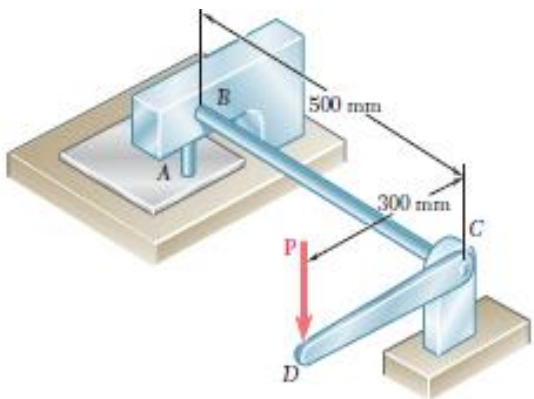

Prob. 3: The hollow steel shaft shown (G = 77.2 GPa, $\tau_{allowable} = 50\ MPa$) rotates at 240 rpm. Determine (a) the maximum power that can be transmitted, (b) the corresponding angle of twist of the shaft.
(Ans: P=51.7 kW, $\varphi = 6.17^0$)

Prob. 4: The design of a machine element calls for a 40-mm-outer-diameter shaft to transmit 45 kW. (a) If the speed of rotation is 720 rpm, determine the maximum shearing stress in shaft a. (b) If the speed of rotation can be increased 50% to 1080 rpm, determine the largest inner diameter of shaft b for which the maximum shearing stress will be the same in each shaft. (Ans: $\tau = 47.5MPa, d = 30.4mm$)

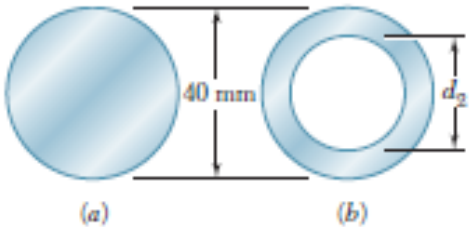

Prob. 5: When drilling a hole in a table leg, a furniture maker uses a hand-operated drill (see figure) with a bit of diameter d = 4.0 mm.

(a) If the resisting torque supplied by the table leg is equal to 0.3 N.m, what is the maximum shear stress in the drill bit?

(b) If the shear modulus of elasticity of the steel is G = 75 GPa, what is the rate of twist of the drill bit (degrees per meter)?

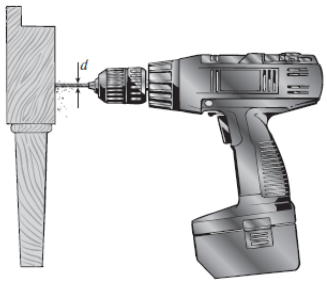

Prob. 6: The steel axle of a large winch on an ocean liner is subjected to a torque of 1.5 kN.m. What is the minimum required diameter d_{min} if the allowable shear stress is 50 MPa and the allowable rate of twist is 0.8°/m? (Assume that the shear modulus of elasticity is 80 GPa.)