Automatic Solar Tracking System

Using LM358 Comparator & L293D Motor Driver

Team Members

IT128 Sohamsinh Sindhav · IT142 Smit Varsada

IT141 Gopi Vamja · IT150 Priyanshi Patel

Class & Division

IT — F Division

Introduction

What Is Solar Tracking?

A system that rotates a solar panel to follow the sun's position throughout the day, maximizing light exposure.

Why Is It Needed?

A fixed panel captures only ~40% of available sunlight. Tracking boosts energy harvest significantly.

Basic Automation Idea

Light-sensitive sensors (LDRs) detect sun direction; a comparator circuit drives a motor to align the panel automatically.

Made with GAMMA

Project Objectives

Maximize Solar Efficiency

Continuously align the panel perpendicular to sunlight for peak power output throughout the day.

Automatic Panel Alignment

Eliminate manual adjustment using LDR sensors and a comparator-driven feedback loop.

Simple & Low-Cost Design

Use widely available, affordable components — ideal for student projects and small-scale renewable energy demos.

Made with GAMMA

Components Used

Power Supply

9V Battery — primary power source for the entire circuit.

7805 Regulator

Steps down 9V to a stable **+5V** for logic and sensors.

LM358 Comparator

Dual op-amp IC — compares two LDR voltages to decide motor direction.

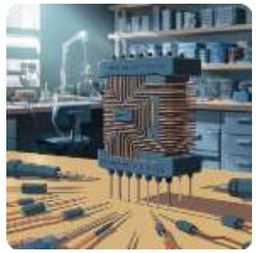

LDR Sensors (×2)

Light-dependent resistors — convert light intensity into voltage for comparison.

L293D Motor Driver

H-Bridge IC — drives the DC motor in either direction based on LM358 output.

DC Motor + Potentiometer

Motor rotates the panel; potentiometer sets the reference threshold voltage.

Made with GAMMA

System Block Diagram

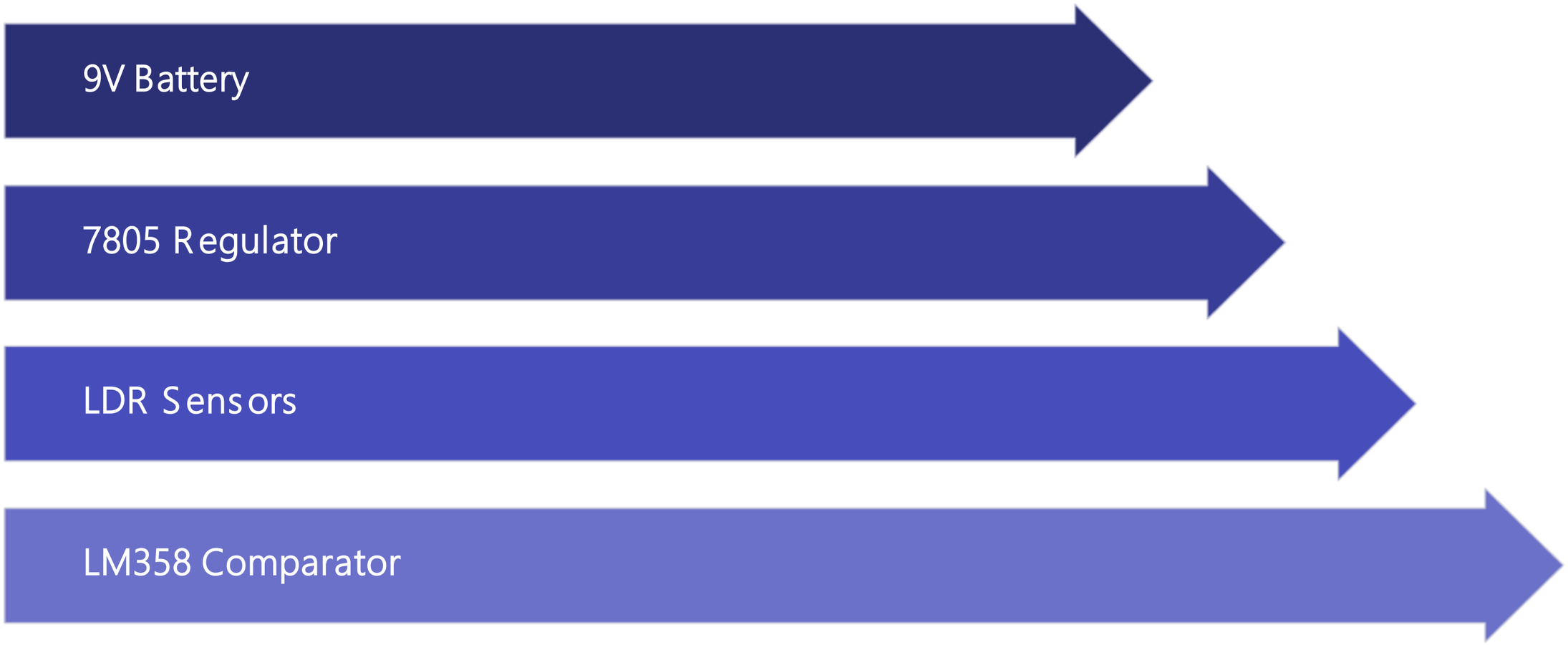

Power flows left to right: the battery feeds the regulator, which supplies clean 5V to the sensors and logic. The LDR pair feeds the comparator, which outputs a direction decision to the motor driver, which physically rotates the panel.

Made with GAMMA

Power Distribution

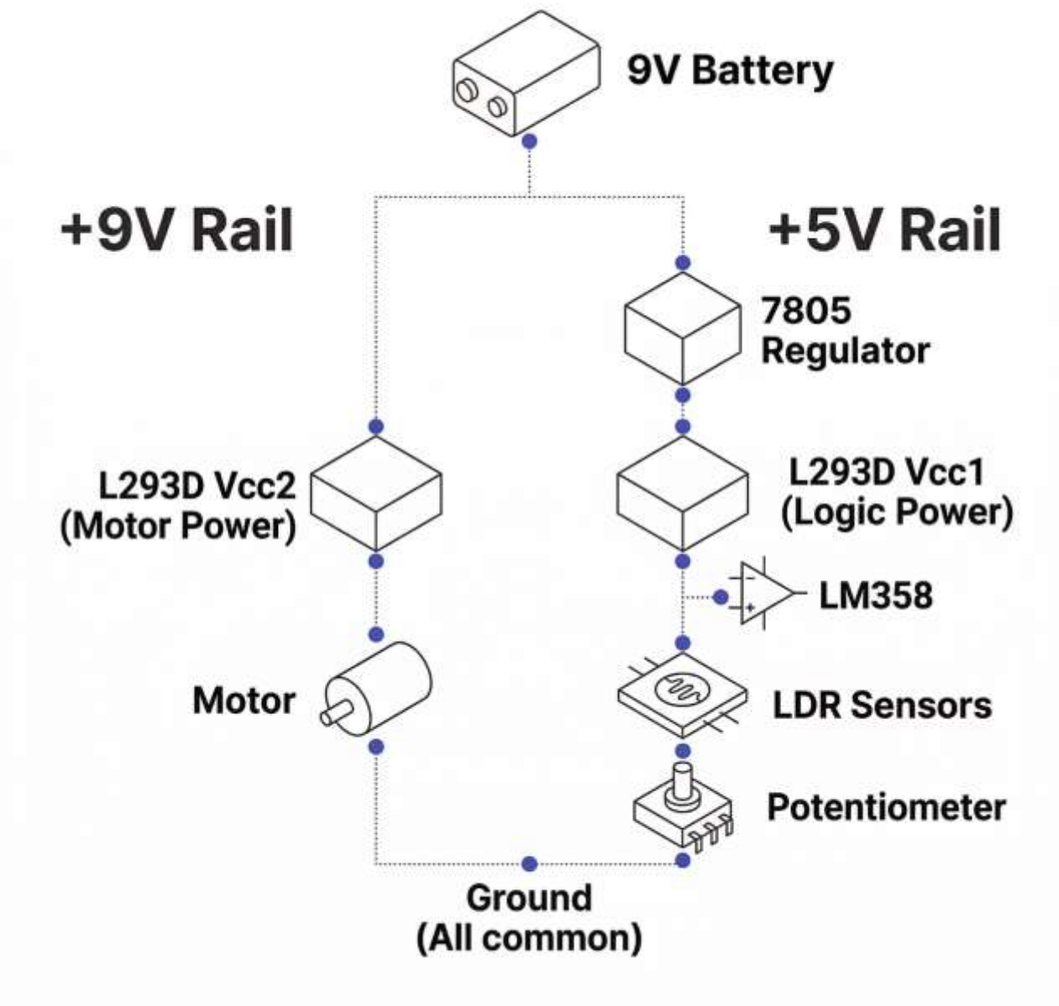

+9V Rail → Motor Power

Connected to **L293D Vcc2**. Drives the DC motor with full battery voltage.

+5V Rail → Logic & Sensors

Regulated output feeds **LM358**, both **LDR** dividers, **potentiometer**, and **L293D Vcc1**.

Common Ground

All components — battery, regulator, ICs, sensors — share a single common ground for proper circuit operation.

Made with GAMMA

How the LDR Works

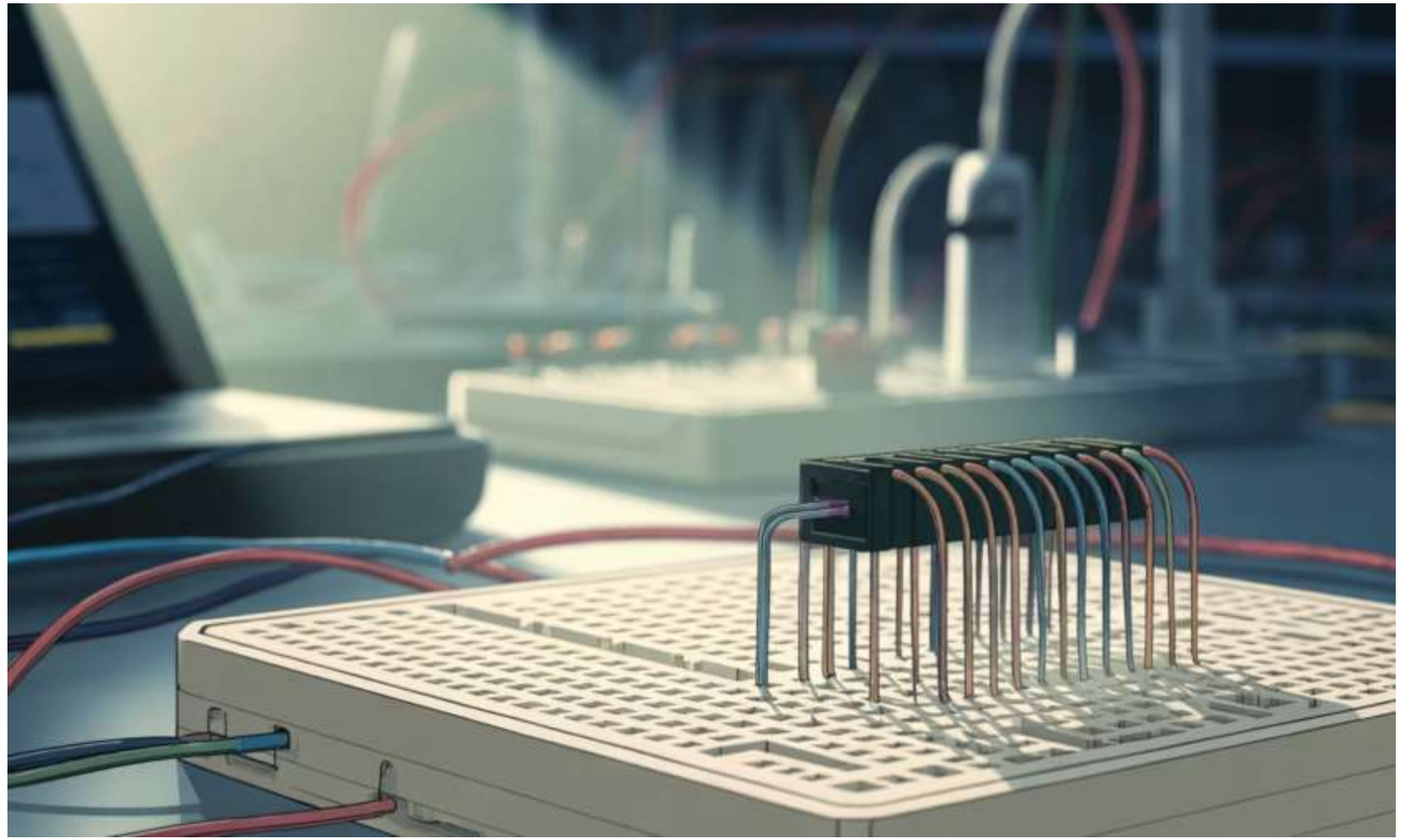

01

Voltage Divider Circuit

Each LDR is paired with a fixed resistor between **+5V and GND**, forming a voltage divider. The midpoint voltage feeds the LM358 input.

02

Light Changes Resistance

In bright light, LDR resistance drops → midpoint voltage rises.
In dim light, LDR resistance rises → midpoint voltage falls.

03

Variable Voltage Output

Each sensor produces a unique voltage proportional to its light level — this difference is what the comparator measures.

Made with GAMMA

LM358 — The Control Unit

Acts as a Comparator

Each op-amp inside LM358 compares its two input voltages (V+ and V−) and outputs a HIGH or LOW signal accordingly.

Compares LDR Voltages

LDR 1 voltage → V+ input. LDR 2 (or potentiometer reference) → V− input. The difference determines the output state.

Drives the Motor Driver

Both outputs of LM358 connect directly to the two input pins of L293D, telling it which direction to spin the motor.

Made with GAMMA

L293D — The Power Unit

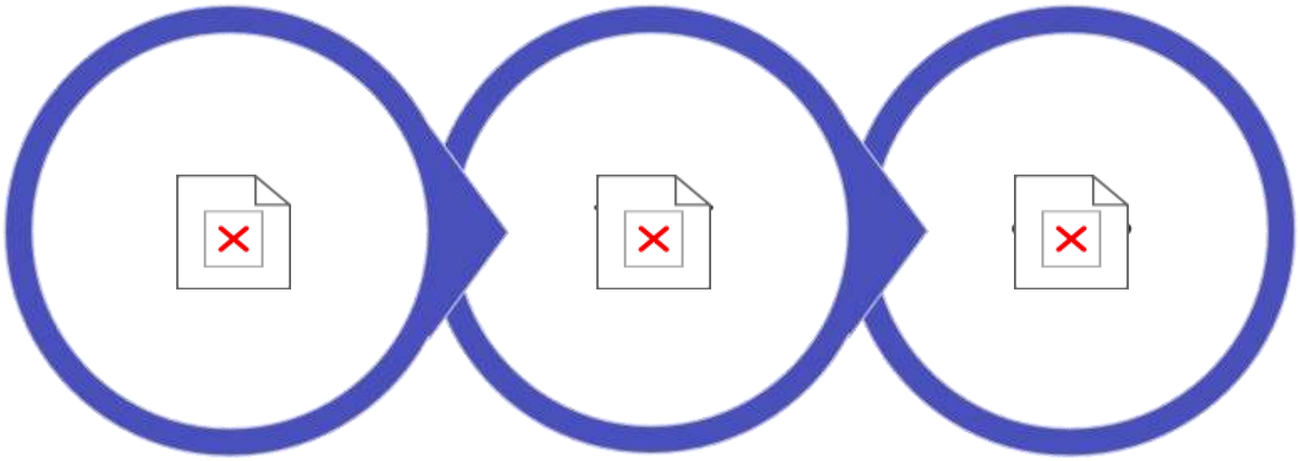

LM358 Input → **L293D H-Bridge** → **Motor Rotation**

Vcc1 = 5V (Logic)

Powers the internal logic and control circuitry of the L293D chip.

Vcc2 = 9V (Motor)

Supplies power directly to the output stage that drives the DC motor.

H-Bridge Direction Control

Reversing which input is HIGH/LOW reverses current flow through the motor — changing rotation direction.

Made with GAMMA

Working Principle & Advantages

How It All Works Together

Light Detected

Two LDRs sense light intensity from opposite sides of the panel and produce different voltages.

Comparator Decides

LM358 compares the two voltages. If LDR1 > LDR2, it outputs HIGH on one line — signaling "rotate left."

Motor Rotates

L293D receives the signal and drives the motor in the correct direction until both LDRs read equal light.

Key Advantages

Higher Efficiency

Captures significantly more solar energy than a fixed panel.

Low Cost

Built with inexpensive, widely available components.

Fully Automatic

No manual intervention needed — the circuit self-corrects continuously.

Eco-Friendly

Supports renewable energy goals with zero additional power overhead.

Made with GAMMA