SUZUKI

RGV250

SERVICE MANUAL

99500-12077-01E

Downloaded from www.Manualslib.com manuals search engine

Downloaded from www.Manualslib.com manuals search engine

FOREWORD

The SUZUKI RGV250 has been developed as a new generation motorcycle to the RGV-models. It is packed with highly advanced design concepts including a SUZUKI 90°-degree, V-configuration, a 2-cylinder engine, an Automatic Exhaust Timing Control (A.E.T.C.), a SUZUKI Boron Composit (S.B.C.), a Slingshot carburetor, a New air induction system, a Radial Flow Radiator, a Dual-cell configuration, highly rigid frame tank rails (DC-ALBOX type), a High rigidity front fork and rear suspension.

The RGV250, manufactured to standard specifications, is the main subject matter of this manual. However, the RGV250 machines distributed in your country might differ in minor respects from the standard-specification and, if they do, it is because some minor modifications (which are of no consequence in most cases as far as servicing is concerned) had to be made to comply with the statutory requirements of your country.

This service manual has been produced primarily for experienced mechanics whose job is to inspect, adjust, repair and service SUZUKI motorcycles. Apprentice mechanics and do-it-yourself mechanics, will also find this manual an extremely useful repair guide. This manual contains the most up-to-date information at the time of publication. The rights are reserved to update or make corrections to this manual at any time.

SUZUKI MOTOR CORPORATION
Overseas Service Department

© COPYRIGHT SUZUKI MOTOR CORPORATION 1990

GROUP INDEX

GENERAL INFORMATION	1
PERIODIC MAINTENANCE AND TUNE-UP PROCEDURES	2
ENGINE	3
FUEL AND LUBRICATION SYSTEM	4
COOLING SYSTEM	5
ELECTRICAL SYSTEM	6
CHASSIS	7
SERVICING INFORMATION	8
RGV250L('90-MODEL)	9
RGV250M('91-MODEL)	10
RGV250N ('92-MODEL)	11
RGV250P ('93-MODEL)	12
RGV250R ('94-MODEL)	13
RGV250T ('96-MODEL)	14

Downloaded from www.Manualslib.com manuals search engine

Downloaded from www.Manualslib.com manuals search engine

GENERAL INFORMATION

1

CONTENTS

SERIAL NUMBER LOCATION 1- 1
FUEL, OIL AND COOLANT RECOMMENDATION 1- 1
BREAKING-IN PROCEDURES 1- 3
CYLINDER IDENTIFICATION 1- 3
SPECIAL MATERIALS 1- 4
PRECAUTION AND GENERAL INSTRUCTION 1- 7
SPECIFICATIONS 1- 9

Downloaded from www.Manualslib.com manuals search engine

SUZUKI RGV250

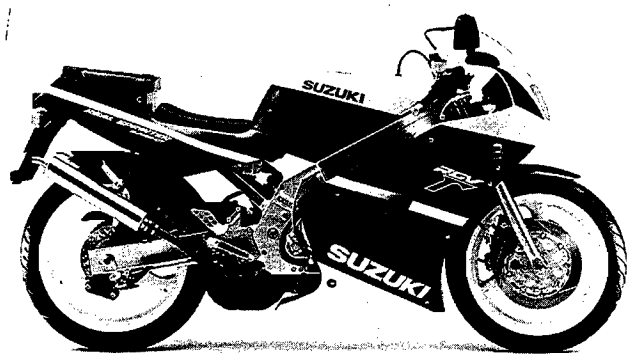

RIGHT SIDE

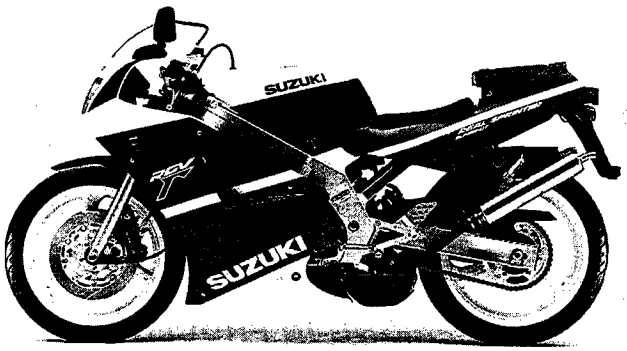

LEFT SIDE

SERIAL NUMBER LOCATION

The frame serial number or V.I.N. (Vehicle Identification Number) ① is stamped on the steering head pipe. The engine serial number ② is located on the rear side of the crankcase. These numbers are required especially for registering the machine and ordering spare parts.

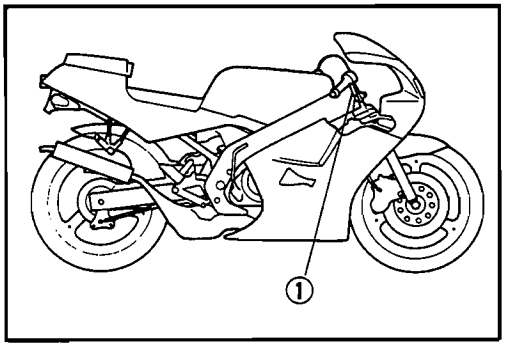

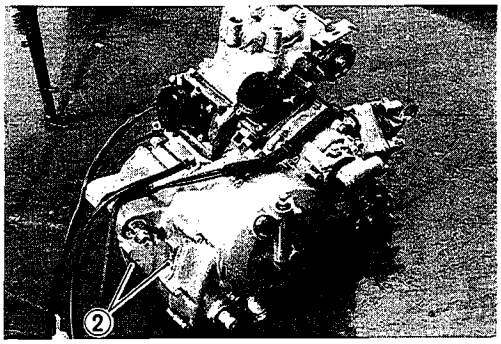

FUEL, OIL AND COOLANT RECOMMENDATION

FUEL

Gasoline used should be graded 85 — 95 octane or higher. An unleaded or low-lead gasoline type is recommended.

ENGINE OIL

Use SUZUKI "CCI" oil or SUZUKI CCI Super oil. They are formulated to give best engine performance with least combustion chamber deposits, least preignition, maximum spark plug life and best lubrication. If they are not available, a good quality TWO-STROKE OIL (non-diluent type) should be used.

Downloaded from www.Manualslib.com manuals search engine

TRANSMISSION OIL

Use a good quality **SAE 10W/40 MOTOR OIL.**

FRONT FORK OIL

Use fork oil # 10.

99000-99044-10G: SUZUKI Fork oil # 10

BRAKE FLUID

Specification and classification: SAE J1703, DOT3 or DOT4

WARNING:

* **Since the brake system of this motorcycle is filled with a glycol-based brake fluid by the manufacturer, do not use or mix different types of fluid such as silicone-based and petroleum-based fluid for refilling the system, otherwise serious damage will result.**
* **Do not use any brake fluid taken from old or used or unsealed containers.**
* **Never re-use brake fluid left over from the previous servicing and stored for a long period.**

COOLANT

Use an anti-freeze/coolant compatible with an aluminum radiator, mixed with distilled water only, at the ratio of 50 : 50.

WATER FOR MIXING

Use distilled water only. Water other than distilled water can corrode and clog the aluminum radiator.

ANTI-FREEZE/COOLANT

The coolant performs as corrosion and rust inhibitor as well as anti-freeze. Therefore, the coolant should be used at all times even through the atmospheric temperature in your area does not go down to freezing point.

SUZUKI recommends the use of SUZUKI GOLDEN CRUISER 1 200 NA (Non-amine type) anti-freeze/coolant. If this is not available, use an equivalent which is compatible with an aluminum radiator.

REQUIRED AMOUNT OF WATER/COOLANT

Solution capacity (total): 1 600 ml (1.7/1.4 US/Imp qt)

CAUTION:

Mixing of anti-freeze/coolant should not exceed 60%. Mixing beyond it would reduce its efficiency. If the anti-freeze/coolant mixing ratio is below 50%, the rust inhibiting performance is greatly reduced. Be sure to mix the solution at 50%, even though the atmospheric temperature does not go down to freezing point.

Downloaded from www.Manualslib.com manuals search engine

BREAKING-IN PROCEDURES

During manufacture only the best possible materials are used and all machined parts are finished to a very high standard, but it is still necessary to allow the moving parts to "BREAK-IN" before subjecting the engine to maximum stresses. The future performance and reliability of the engine depends on the care and restraint exercised during its early life. The general rules are as follows:

- Keep to these breaking-in engine speed limits:

Initial 800 km	Below 6 000 r/min
Up to 1 600 km	Below 8 000 r/min
Over 1 600 km	Below 11 500 r/min

- Upon reaching an odometer reading of 1 600 km you can subject the motorcycle to full throttle operation.
  However, do not exceed 11 500 r/min at any time.

CYLINDER IDENTIFICATION

The two cylinders of this engine are identified as Left and Right cylinder, as shown in the photograph. (as viewed by the rider on the seat)

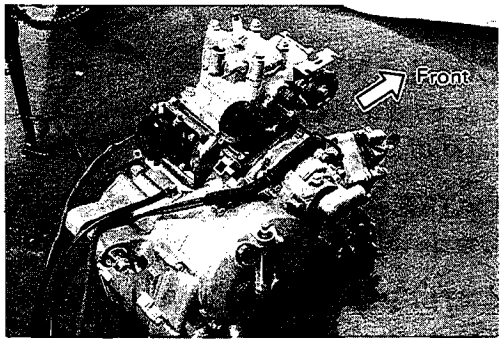

Downloaded from www.Manualslib.com manuals search engine

SPECIAL MATERIALS

The materials listed below are needed for maintenance work on the RGV250, and should be kept on hand for ready use. They supplement such standard materials as cleaning fluids, lubricants, emery cloth and the like. How to use them and where to use them are described in the text of this manual.

MATERIAL	PART	PAGE	PART	PAGE
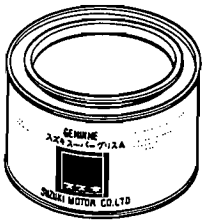 SUZUKI SUPER GREASE "A" 99000-25010	• Side stand pivot • Brake pedal pivot and brake rod link • Gearshift lever mounting boss • Oil seals	2- 2 3-37	• Wheel bearing • Steering stem bearing • Rear sprocket mounting drum bearing • Swingarm, cushion lever bearing • Cushion lever and cushion lever rod	7- 3 7-18 7-31 7-44 7-46
 THREAD LOCK SUPER "1322" 99000-32110	• Actuator pulley bolt	3-11		
 SUZUKI BOND No. 1215 99000-31110	• Driveshaft bearing retainer • Crankcase upper • Water pump mechanical seal housing	3-37 3-38 3-46		
 THREAD LOCK SUPER "1333B" 99000-32020	• Gearshift pole lifter plate screw • Gearshift cam guide	3-41 3-41		

Downloaded from www.Manualslib.com manuals search engine

MATERIAL	PART	PAGE	PART	PAGE
THREAD LOCK SUPER "1303" 99000-32110	• Kick starter shaft stopper • Cylinder lock bolt	3-43 7-13		
THREAD LOCK SUPER "1324" 99000-32120	• Magneto rotor nut	3-50		
THREAD LOCK SUPER "1360" 99000-32130	• Disc plate bolt	7- 3 7-28		
THREAD LOCK "1342" 99000-32050	• Counter bearing shaft retainer • Shifting cam shaft • Cam stopper arm support bolt • Cam stopper arm support nut • Gearshift pole lifter plate screw • Gearshift cam guide screw • Magneto stator and signal generator screw • Exhaust valve arm bolt	3-41 3-41 3-41 3-41 3-41 3-41 3-50 3-52		

Downloaded from www.Manualslib.com manuals search engine

MATERIAL	PART	PAGE	PART	PAGE
 SUZUKI BRAKE FLUID 99000-23110 (0.5L)				
 SUZUKI FORK OIL # 10 99000-99044-10G				
 SUZUKI GOLDEN CRUISER 1200 NA Non-Amine type (2.0L) 99000-99032-10X	• Coolant			

Downloaded from www.Manualslib.com manuals search engine

PRECAUTION AND GENERAL INSTRUCTION

Observe the following items without fail when servicing, disassembling and reassembling motorcycles.

- Do not run engine indoors with little or no ventilation.
- Be sure to replace packings, gaskets, circlips, O-rings and cotter pins with new ones.

CAUTION:
Never reuse a circlip. After a circlip has been removed from a shaft, it should be discarded and a new circlip must be installed.
When installing a new circlip, care must be taken not to expand the end gap larger than required to slip the circlip over the shaft.
After installing a circlip, always insure that it is completely seated in its groove and securely fitted.

- Tighten cylinder head and case bolts and nuts beginning with larger diameter and ending with smaller diameter, and from inside to outside diagonally, to the specified tightening torque.
- Use special tools where specified.
- Use genuine parts and recommended oils.
- When 2 or more persons work together, pay attention to the safety of each other.
- After the reassembly, check parts for tightness and operation.
- Treat gasoline, which is extremely flammable and highly explosive, with greatest care. Never use gasoline as cleaning solvent.

Warning, Caution and Note are included in this manual occasionally, describing the following contents.

WARNING	**The personal safety of the rider or bystanders maybe involved. Disregarding this information could result in personal injury.**
CAUTION	**These instructions point out special service procedures or precautions that must be followed to avoid damaging the machine.**
NOTE	*This provides special information to make maintenance easier or important instructions clearer.*

REPLACEMENT PARTS

When you replace any parts, use only genuine SUZUKI replacement parts, or their equivalent. Genuine SUZUKI parts are high quality parts which are designed and built specifically for SUZUKI vehicles.

CAUTION:
Use of replacement parts which are not equivalent in quality to genuine SUZUKI parts can lead to performance problems and damage.

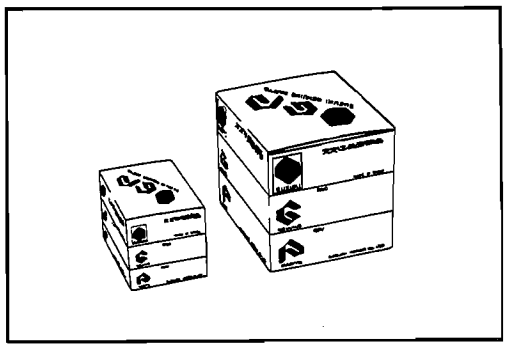

Downloaded from www.Manualslib.com manuals search engine

ASBESTOS INFORMATION

Note the following when handling a supply part with the above WARNING LABEL or any part in the parts list in this section which contains asbestos.

- Operate if possible out of doors in a well ventilated place.
- Preferably use hand tools or low speed tools equipped, if necessary, with an appropriate dust extractor facility. If high speed tools are used, they should always be so equipped.
- If possible, dampen before cutting or drilling.
- Dampen dust and place it in a properly closed receptacle and dispose of it safely.

Any domestic asbestos product to which the above does not apply, but which is likely to release fibres during use should be replaced by new one when worn.

1.	Clutch cover gasket
2.	Drive shaft bearing retainer gasket
3.	Cylinder cover gasket
4.	Exhaust pipe gasket

Downloaded from www.Manualslib.com manuals search engine

SPECIFICATIONS

DIMENSIONS AND DRY MASS

Overall length	2 015 mm (79.3 in)
Overall width	695 mm (27.4 in)
Overall height	1 065 mm (41.9 in)
Wheelbase	1 375 mm (54.1 in)
Ground clearance	120 mm (4.7 in)
Seat height	755 mm (29.7 in)
Dry mass	128 kg (282 lbs)

ENGINE

Type	Two-stroke, water-cooled, 90° V-twin
Number of cylinders	2
Bore	56.0 mm (2.205 in)
Stroke	50.6 mm (1.992 in)
Piston displacement	249 cm^3 (15.2 cu. in)
Compression ratio	7.5 : 1
Carburetor	MIKUNI VM32SS
Air cleaner	Polyurethane foam element
Starter system	Primary kick
Lubrication system	SUZUKI "CCI"

TRANSMISSION

Clutch	Wet multi-plate type
Transmission	6-speed constant mesh
Gearshift pattern	1-down, 5-up
Primary reduction	2.565 (59/23)
Final reduction	3.066 (46/15)
Gear ratios, Low	2.454 (27/11)
2nd	1.625 (26/16)
3rd	1.235 (21/17)
4th	1.045 (23/22)
5th	0.916 (22/24)
Top	0.840 (21/25)
Drive chain	DAIDO : DID 520V_2 TAKASAGO : RK520M06 114 links

CHASSIS

Front suspension	Telescopic, coil spring, oil damped, spring 5-way, adjustable.
Rear suspension	Full-floating suspension system, gas/coil spring, oil damped, spring 7-way, adjustable.
Steering angle	30° (right & left)
Caster	64°25′
Trail	98 mm (3.86 in)
Turning radius	3.1 m (10.2 ft)
Front brake	Disc brake, twin
Rear brake	Disc brake
Front tire size	110/70 R17 53H
Rear tire size	140/60 R18 64H
Front fork stroke	120 mm (4.7 in)
Rear wheel travel	140 mm (5.5 in)

ELECTRICAL

Ignition type	SUZUKI "PEI"
Ignition timing	14° B.T.D.C. below 1 300 r/min
Spark plug	N.G.K.: BR9ES
Battery	12V 10.8 KC (3Ah)/10HR
Generator	Three-phase A.C. generator
Fuse	20A

CAPACITIES

Fuel tank	
including reserve	17L (4.5/3.7 US/Imp gal)
reserve	5.5L (5.8/4.8 US/Imp qt)
Engine oil	1.1L (1.2/1.0 US/Imp qt)
Transmission	700 ml (23.7/24.6 US/Imp oz)
Coolant	1.6L (1.7/1.4 US/Imp qt)
Front fork oil	429 ml (14.5/15.1 US/Imp qt)

Downloaded from www.Manualslib.com manuals search engine

PERIODIC MAINTENANCE AND TUNE-UP PROCEDURES

2

CONTENTS

PERIODIC MAINTENANCE SCHEDULE 2- 1
- PERIODIC MAINTENANCE CHART 2- 1
- LUBRICATION POINTS 2- 2

MAINTENANCE AND TUNE-UP PROCEDURES 2- 3
- BATTERY 2- 3
- ENGINE BOLTS AND NUTS 2- 3
- CYLINDER HEAD, CYLINDER AND MUFFLER 2- 4
- AIR CLEANER 2- 4
- SPARK PLUGS 2- 5
- CARBURETORS 2- 5
- FUEL LINES 2- 7
- OIL PUMP 2- 7
- CLUTCH 2- 8
- TRANSMISSION OIL 2- 8
- COOLING SYSTEM 2- 8
- DRIVE CHAIN 2-10
- BRAKES 2-11
- TIRES 2-14
- STEERING 2-15
- FRONT FORK 2-15
- REAR SUSPENSION 2-15
- CHASSIS BOLTS AND NUTS 2-16

Downloaded from www.Manualslib.com manuals search engine

PERIODIC MAINTENANCE SCHEDULE

The chart below lists the recommended intervals for all the required periodic service work necessary to keep the motorcycle operating at peak performance and economy. Mileages are expressed in terms of kilometers.

NOTE:
Vehicles operated under severe conditions may require more frequent servicing.

PERIODIC MAINTENANCE CHART

This interval should be judged by odometer reading or months, whichever comes first.	km	1 000	6 000	12 000	18 000	24 000
	months	2	12	24	36	48
Battery		–	I	I	I	I
Engine bolts and nuts		T	T	T	T	T
Cylinder head, cylinder and muffler		–	C	C	C	C
Air cleaner		Clean every 3 000 km				
Spark plugs		I	R	R	R	R
Carburetors		I	I	I	I	I
Fuel lines		I	I	I	I	I
		Replace every 4 years				
Oil pump		I	I	I	I	I
Clutch		I	I	I	I	I
Transmission oil		R	–	R	–	R
Radiator hoses		I	–	I	–	I
		Replace every 4 years				
Coolant		Change every 2 years				
Drive chain		I	I	I	I	I
		Clean and lubricate every 1 000 km				
Brakes		I	I	I	I	I
Brake hoses		I	I	I	I	I
		Replace every 4 years				
Brake fluid		Change every 2 years				
Tires		I	I	I	I	I
Steering		I	I	I	I	I
Front fork		–	–	I	–	I
Rear suspention		–	–	I	–	I
Chassis bolts and nuts		T	T	T	T	T

T : Tighten, I : Inspect and clean, adjust, replace or lubricate as necessary, R : Replace, C : Clean

Downloaded from www.Manualslib.com manuals search engine

LUBRICATION POINTS

Proper lubrication is important for smooth operation and long life of each working part of the motorcycle. Major lubrication points are indicated below.

NOTE:

* *Before lubricating each part, clean off any rusty spots and wipe off any grease, oil dirt or grime.*
* *Lubricate exposed parts which are subject to rust, with motor oil or grease.*

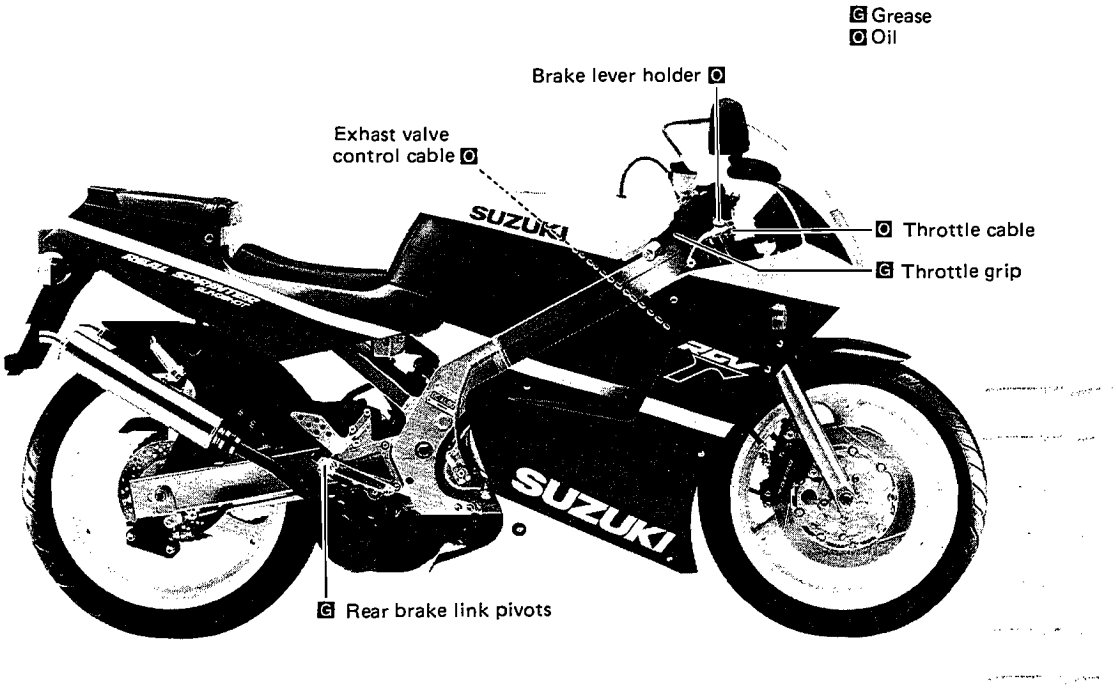

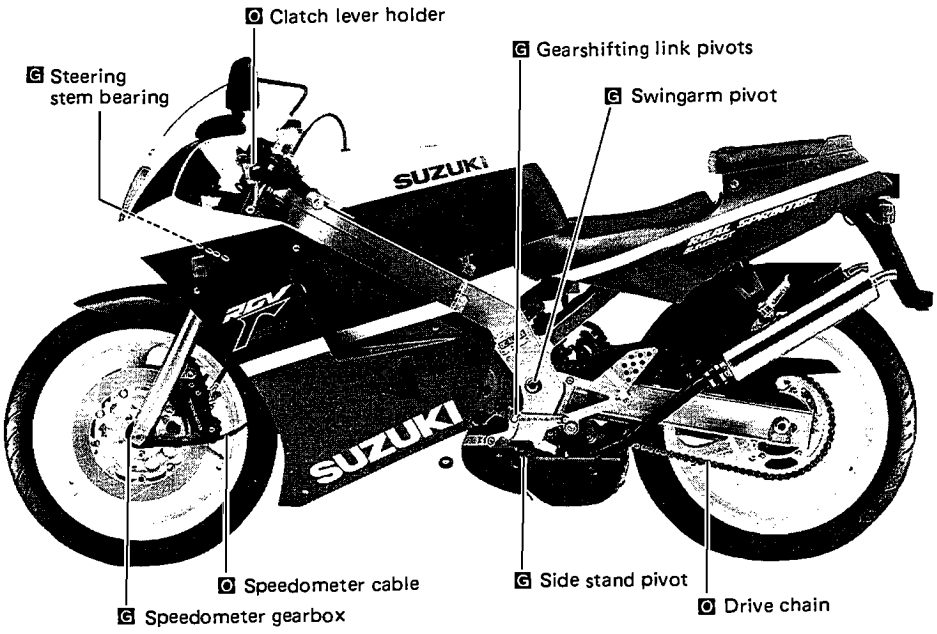

Downloaded from www.Manualslib.com manuals search engine

MAINTENANCE AND TUNE-UP PROCEDURES

This section describes the service procedures for each section of Periodic Maintenance.

BATTERY

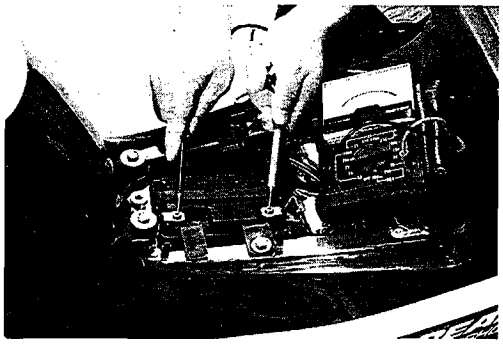

Inspect Every 6 000 km (12 months)

- Remove the fuel tank. (Refer to page 3-2.)
- Check the battery voltage with the SUZUKI pocket tester. If the voltage reading is below 12.0V, this battery needs recharging.

Battery voltage: Above 12.0V

- Remove the battery ⊖ and ⊕ lead wires and remove the battery from the frame.

CAUTION:
Read the "ELECTRICAL SECTION", for servicing the battery.

ENGINE BOLTS AND NUTS

Tighten at Initially 1 000 km (2 months) and Every 6 000 km (12 months)

CYLINDER HEAD NUTS

- Remove the lower fairings. (Refer to page 7-1.)
- First loosen nuts by 1/4 turn and tighten the cylinder nuts to the specified torque in ascending numerical order as shown in the illustration.

Nut
Tightening torque: 23 – 27 N·m (2.3 – 2.7 kg-m)

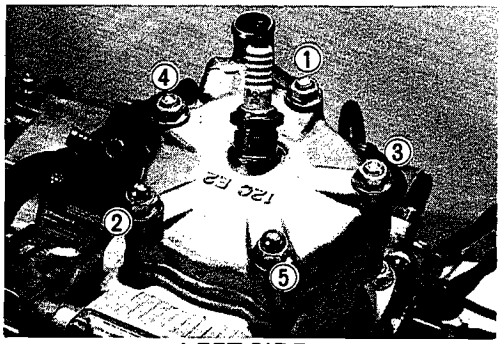

LEFT SIDE

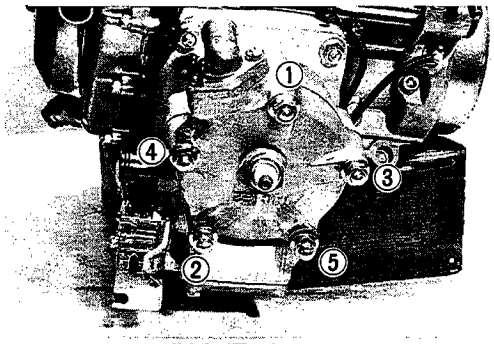

RIGHT SIDE

EXHAUST PIPE NUTS

- Tighten the exhaust pipe nuts to the specified torque.

Tightening torque: 18 – 28 N·m (1.8 – 2.8 kg-m)

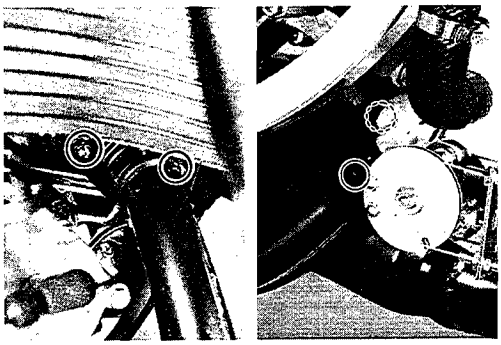

Downloaded from www.Manualslib.com manuals search engine

CYLINDER HEAD, CYLINDER AND MUFFLER

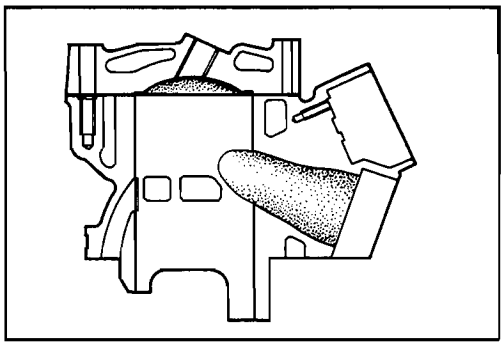

Clean Every 6 000 km (12 months)

- Carbon deposits in the combustion chamber of the cylinder head and at the piston crown will raise the compression ratio and may cause preignition or overheating.
- Carbon deposited at the exhaust port of the cylinder will prevent the flow of exhaust gas, reducing the output. Remove carbon deposits periodically.

AIR CLEANER

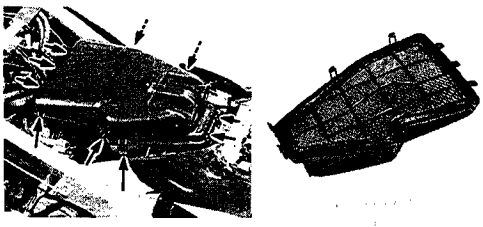

Clean Every 3 000 km

- Remove the seat. (Refer to page 3-2.)
- Unfasten the hook at the front part of both right and left frame covers.
- Remove the fuel tank. (Refer to page 3-2.)
- Remove the air cleaner cover, then remove the air cleaner element frame and air cleaner element from the air cleaner cover.
- Fill a washing pan of a proper size with nonflammable cleaning solvent. Immerse the air cleaner element in the cleaning solvent and wash it clean.
- Squeeze the cleaning solvent out of the washed element by pressing it between the palms of both hands: do not twist or wring the element or it will develop tears.
- Immerse the air cleaner element in motor oil, and squeeze the oil out of the element leaving it slightly wet with oil.
- Fit the air cleaner element and its frame to the air cleaner cover properly.

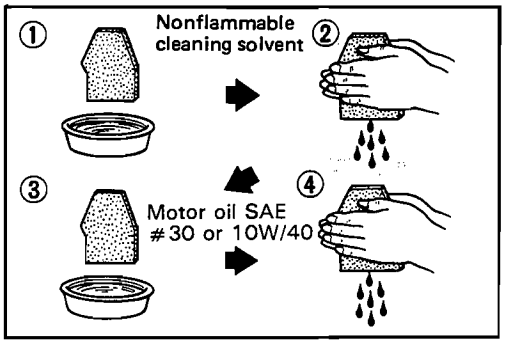

CAUTION:

* **Before and during the cleaning operation, inspect the element for tears. A torn element must be replaced.**
* **Be sure to position the element snugly and correctly, so that no incoming air will bypass it. Remember, rapid wear of piston rings and cylinder bore is often caused by a defective or poorly fitted element.**

CAUTION:

If driving under dusty conditions, clean the air cleaner element more frequently. The surest way to accelerate engine wear is to use the engine without the element or to use a ruptured element. Make sure that the air cleaner is in good condition at all times. Life of the engine depends largely on this component!

Downloaded from www.Manualslib.com manuals search engine

SPARK PLUGS

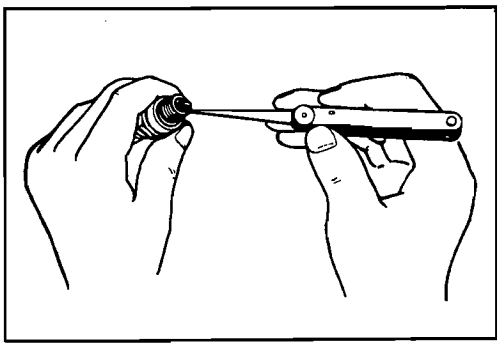

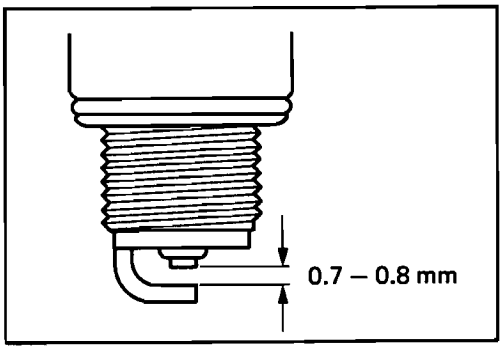

Inspect at Initially 1 000 km (2 months) and Replace Every 6 000 km (12 months)

- Remove the fuel tank. (Refer to page 3-2.)

The plug gap is adjusted to 0.7 – 0.8 mm (0.028 – 0.031 in). The gap is correctly adjusted using a thickness gauge. When carbon is deposited on the spark plug, remove the carbon with a spark plug cleaning machine or by carefully using a tool with a pointed end. If electrodes are extremely worn or burnt, replace the plug. Also replace the plug if it has a broken insulator, damaged thread, etc.

NGK BR9ES listed in the table should be used as the standard plug. However, the heat range of the plug should be selected to meet the requirements of speed, actual load, fuel, etc. If the plugs need to be replaced, it is recommended that the standard plugs listed in the table be selected. Remove the plugs and inspect the insulators. Proper heat range would be indicated if both insulators were light brown in color. If they are blackened by carbon, they should be replaced by a hot type BR8ES if baked white, by NGK BR10ES.
Plugs with high heat range number are used for high speed running. These plugs are designed to be sufficiently cooled to prevent overheating and are called cold type plugs.

Recommended spark plug

NGK	REMARKS
BR8ES	If the standard plug is apt to get wet, replace with this plug. Hot type.
BR9ES	**Standard**
BR10ES	If the standard plug is apt to overheat, replace with this plug. Cold type.

NOTE:
"R" type spark plug is installed for some specifications. "R" type spark plug has a resistor located at the center electrode to prevent radio noise.

CAUTION:
Confirm the thread size and reach when replacing the plug. If the reach is too short, carbon will be deposited on the thread portion of the plug hole and engine damage may result.

CARBURETORS

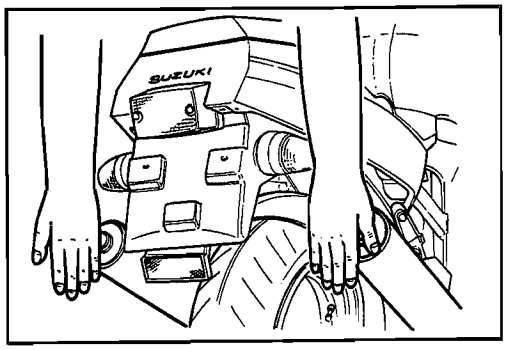

Inspect at Initially 1 000 km (2 months) and Every 6 000 km (12 months)

IDLE RPM ADJUSTMENT

NOTE:
Make this adjustment when the engine is hot.

Downloaded from www.Manualslib.com manuals search engine

THROTTLE CABLE

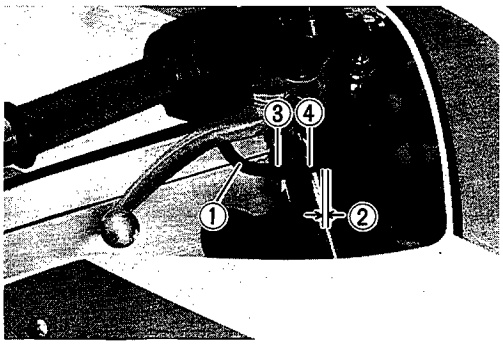

The throttle cable ① should be adjusted to have a play ② of 0.5 mm (0.04 in).

If the adjustment is necessary, adjust the play in the following way.

- Remove the lower fairings. (Refer to page 7-1.)
- Remove the air cleaner. (Refer to page 3-2.)
- Loosen the lock nut ③ and turn the adjuster ④ in or out to obtain the correct play ② 0.5 mm (0.04 in).
- After adjusting the cable play, tighten the lock nut ③ and re-check cable play.
- Adjust the other carburetors in the same manner as above.

CAUTION:

This adjustment could affect the oil pump control cable play, so readjust the oil pump control cable play if necessary.

THROTTLE CABLE PLAY

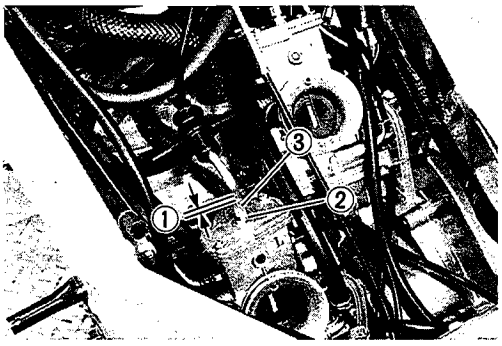

The throttle cable should be adjusted to have a play ① of 0.5 – 1.0 mm (0.02 – 0.04 in).

If the adjustment is necessary, adjust the play in the following way:

- Loosen the lock nut ② and turn the adjuster ③ in or out to obtain the correct play ① 0.5 – 1.0 mm (0.02 – 0.04 in).
- After adjusting the play, tighten the lock nut ②.

WARNING:

After the adjustment is completed, check that handlebars movement does not raise the engine idle speed and that the throttle grip returns smoothly and automatically.

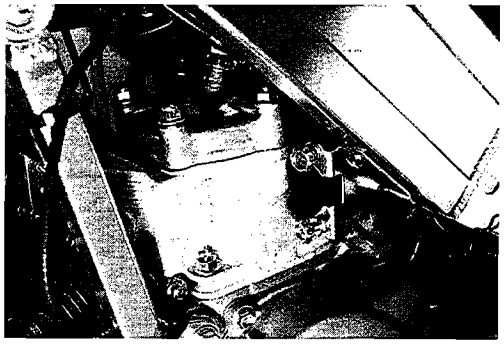

- Connect a tachometer.
- Start up the engine and set its speed at anywhere between 1 150 and 1 450 r/min by turning the right and left throttle stop screws.

Engine idle speed: 1 300 ± 150 r/min

CHOKE CABLE

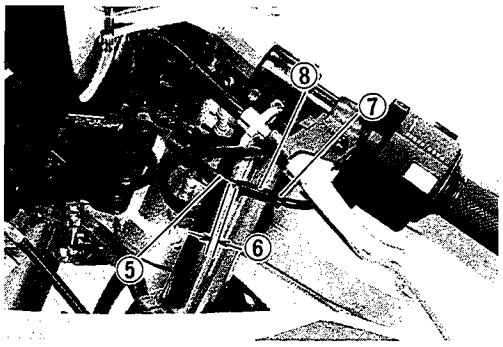

The choke cable ⑤ should be adjusted to have a play ⑥ of 0.5 – 1.0 mm (0.02 – 0.04 in). If the adjustment is necessary, adjust the play in the following way.

- Loosen the lock nut ⑦ and turn the adjuster ⑧ in or out to obtain the correct play ⑥ 0.5 – 1.0 mm (0.02 – 0.04 in).
- After adjusting the play, tighten the lock nut ⑦ and re-check cable play.

WARNING:

After the adjustment is completed, check that the handlebar movement does not raise the engine idle speed and that the throttle grip returns smoothly and automatically.

Downloaded from www.Manualslib.com manuals search engine

FUEL LINES

Inspect at Initially 1 000 km (2 months) and Every 6 000 km (12 months) **Replace Every 4 years**

OIL PUMP

Inspect at Initially 1 000 km (2 months) and Every 6 000 km (12 months)

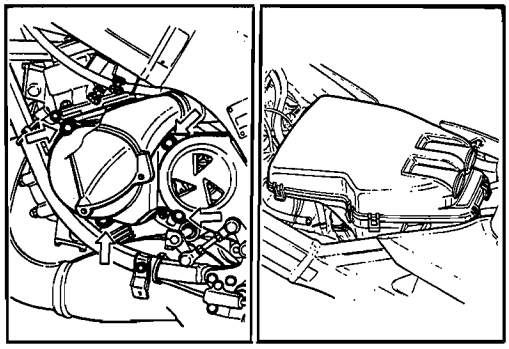

The engine oil is fed by the oil pump to the engine. The amount of oil fed to it is regulated by engine speed and the oil pump control lever which is controlled by the amount of throttle opening.
Check the oil pump in the following manner to confirm correct operation for all throttle valve opening positions.

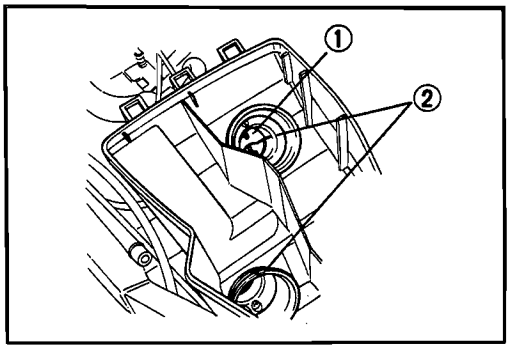

- Remove the magneto cover.
- Remove the oil pump inspection cap.
- Remove the air cleaner cap.
- Turn the throttle grip gradually and raise the throttle valve ① until the valve's lower end aligns with the line ② on the carburetor bore. Hold the throttle in this position.
- Adjust the oil pump cable adjuster ⑤ so that the line ③ on the oil pump lever aligns with the notch line ④ on the body.

CAUTION:
Oil pump cable adjustment must be done after throttle cable adjustment.

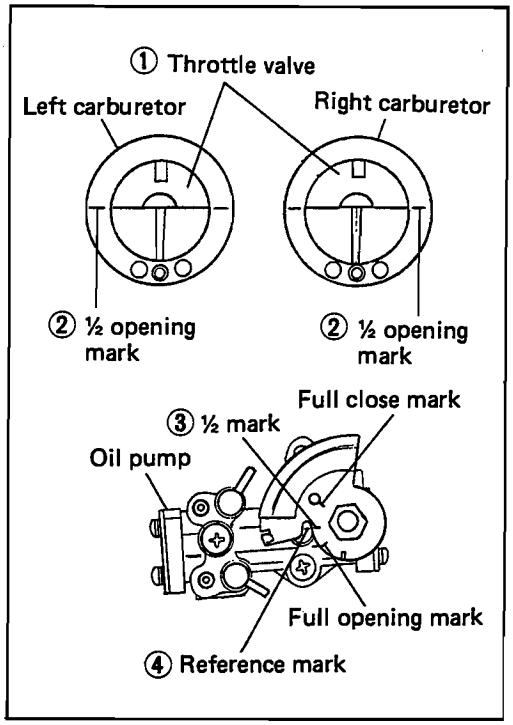

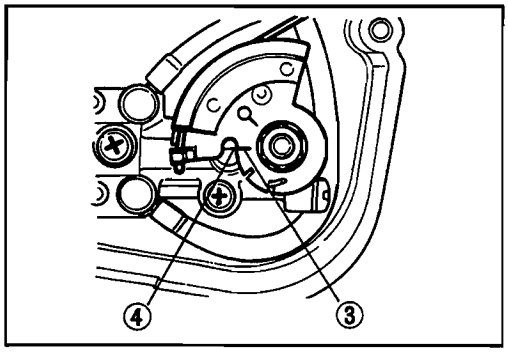

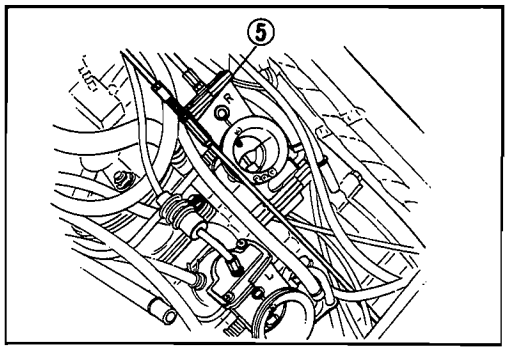

Downloaded from www.Manualslib.com manuals search engine

CLUTCH

Inspect at Initially 1 000 km (2 months) and Every 6 000 km (12 months)

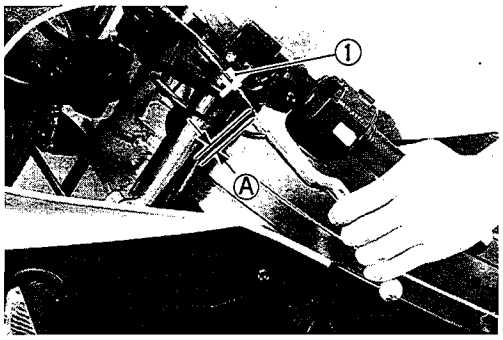

- Remove the lower fairing. (Refer to page 7-1.)
- Loosen the lock nut and turn the adjust nut ① fully in on the clutch lever side.
- Loosen the cable lock nut, tighten the adjusting nut to provide play in the outer cable. Adjust the play of the cable with adjusting nut ② until play Ⓐ of the clutch lever is 2 – 3 mm. Next, secure the lock nut.

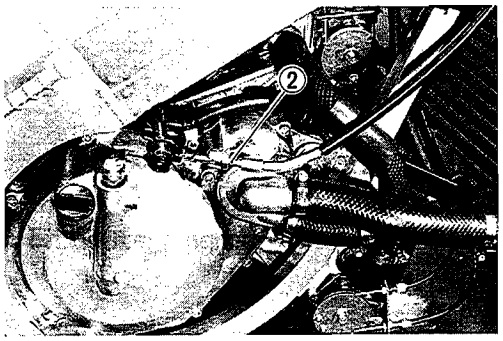

Cable play: 2 – 3 mm (0.078 – 0.118 in)

- If the specified play can not be obtained with adjusting nut ②, carry out the adjustment using the adjusting nut ① on the clutch lever side.

TRANSMISSION OIL

Check Initial 1 000 km (2 months) and Every 6 000 km (12 months)

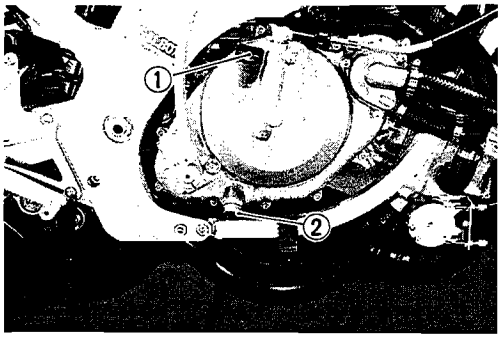

After a long period of use, the transmission oil will deteriorate and quicken the wear of sliding and interlocking surfaces. Replace the transmission oil periodically following the procedure below.

- Start the engine to warm up the oil, this will facilitate draining of oil. Shut off the engine.
- Unscrew the oil filler cap ① and drain plug ②, and drain the oil completely.
- Tighten the drain plug.

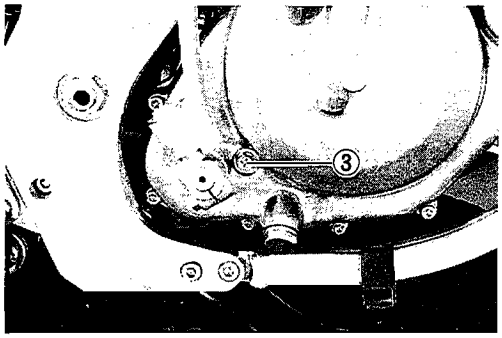

Tightening torque: 20 – 25 N·m (2.0 – 2.5 kg-m)

- Supply a good quality **SAE 10W/40 MOTOR OIL.**

Capacity: 700 ml (23.7/24.6 US/Imp qt)

- Check the oil level with the oil level screw ③ after running engine for 3 minutes.

COOLING SYSTEM

Inspect at Initially 1 000 km (2 months) and Every 12 000 km (24 months)
Change coolant Every 2 years
Replace hoses Every 4 years

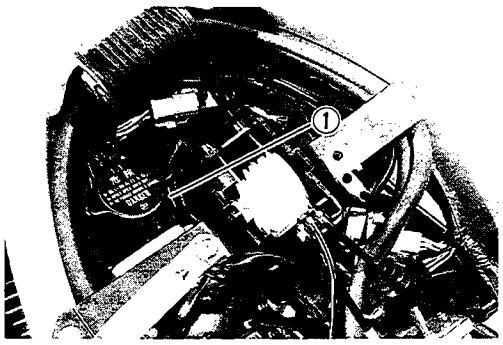

CHANGE THE COOLANT

- Remove the lower fairings. (Refer to page 7-1.)
- Remove the radiator cap ①.

Downloaded from www.Manualslib.com manuals search engine

- Remove the seat. (Refer to page 3-2.)
- Remove the fuel tank. (Refer to page 3-2.)
- Remove the lower fairing. (Refer to page 7-2.)
- Remove the radiator hose ①.
- Remove the drain plug from both right and left cylinders.

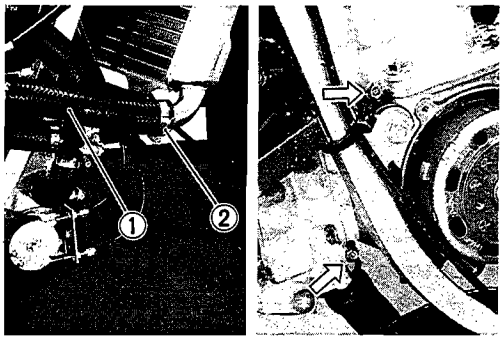

CAUTION:
The cylinder drain plug must be removed when replacing the coolant.

Drain plug: 8 – 12 N·m
(0.8 – 1.2 kg-m, 5.8 – 8.7 lb-ft)

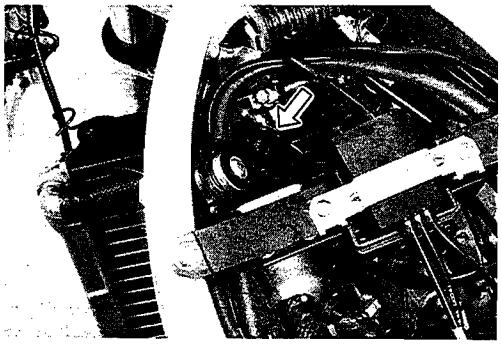

WARNING:
Do not open the radiator cap when the engine is hot, as you may be injured by escaping hot liquid or vapor.

WARNING:
Coolant may be harmful if swallowed or if it comes in contact with skin or eyes. If coolant gets into the eyes or in contact with the skin, it should be flushed thoroughly with plenty of water. If swallowed, induce vomiting and call physician immediately!

- Flush the radiator with fresh water.
- Tighten the radiator hose clamp ② securely.
- Pour the specified coolant up to the radiator inlet hole.
- Loosen the air bleeder bolt ③, ④ for water pump and for radiator to expel air. Tighten the bleeder bolts when air has been bled and coolant comes out.
- Attempt to tip the motorcycle to the right side to let the trapped air go out.

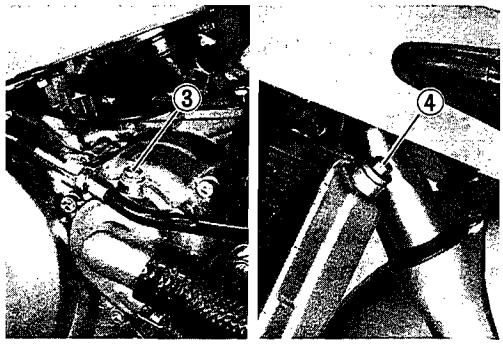

Radiator expel bolt tightening torque: 2 – 3 N·m
(0.2 – 0.3 kg-m)
Water pump expel bolt tightening torque: 8 – 12 N·m
(0.8 – 1.2 kg-m)

NOTE:
For coolant information, refer to "COOLING SYSTEM" section page 5-2.

- Fill the reservoir tank to the "F" level with coolant.
- Close the radiator cap securely.
- After warming up then cooling down the engine, check the coolant level of the reservoir tank and add the coolant to the "F" level if the level is below "L".

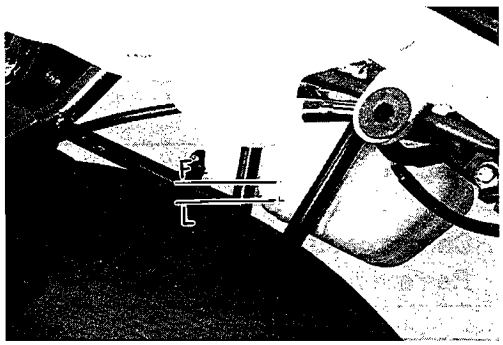

1 350 ml including reservoir tank
250 ml reservoir tank

Downloaded from www.Manualslib.com manuals search engine

DRIVE CHAIN

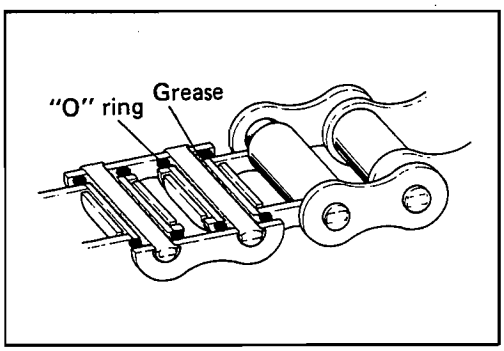

Inspect at Initially 1 000 km (2 months) and Every 6 000 km (12 months)
Clean and Lubricate Every 1 000 km

Visually check the drive chain for the below-listed possible malconditions. (Support the motorcycle by jack and wooden block, and turn the rear wheel slowly by hand with the transmission shifted to Neutral.)

* Loose pins
* Damaged rollers
* Dry or rusted links
* Kinked or binding links
* Excessive wear
* Improper chain adjustment
* Missing O-ring seals

If any defects are found, the drive chain must be replaced.

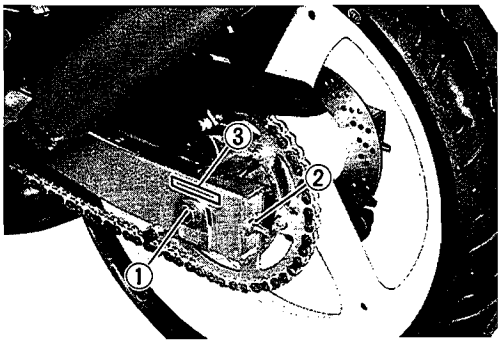

CHECKING

- Remove the cotter pin.
- Loosen axle nut ①.
- Tense the drive chain fully by tightening the chain adjuster lock nuts ②.
- Count out 21 pins (20-pitch) on the chain and measure the distance between the two. If the distance exceeds following limit, the chain must be replaced.

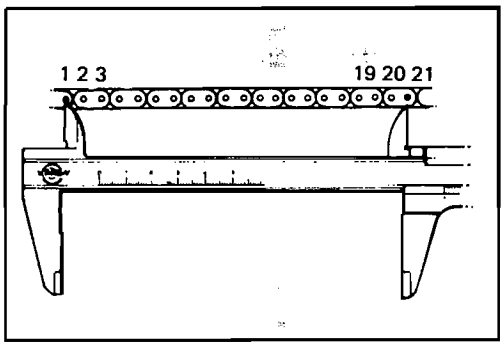

Service Limit: 318.1 mm

ADJUSTING

- Loosen the chain adjuster lock nuts ② until the chain has 20 – 30 mm of sag at the middle between engine and rear sprockets. The mark ③ on both chain adjusters must be at the same position on the scale to ensure that the front and rear wheels are correctly aligned. Place the motorcycle on the side stand for accurate adjustment.
- After adjusting the drive chain, tighten the axle nut ① securely.
- Tighten the chain adjuster lock nuts securely.

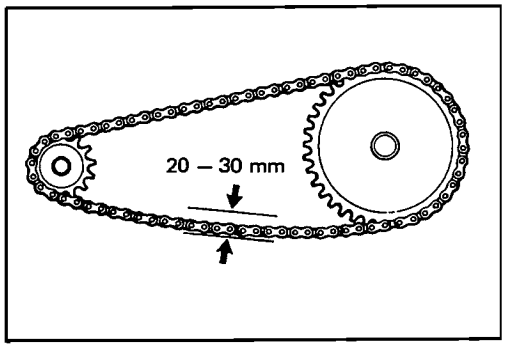

Rear axle nut tightening torque: 85 – 115 N·m (8.5 – 11.5 kg-m)

Downloaded from www.Manualslib.com manuals search engine

CLEANING AND LUBRICATING

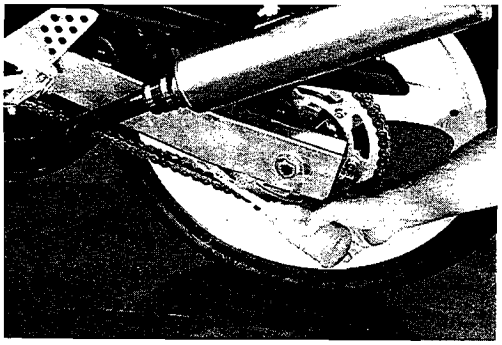

- Wash the chain with kerosene. If the chain tends to rust faster, the intervals must be shortened.

CAUTION:
Do not use trichlene, gasoline or any similar fluids: These fluids have too great a dissolving power for this chain and, what is more important, can spoil the "O" rings (or seals) confining the grease in the bush to pin clearance. Remember, high durability comes from the presence of grease in that clearance.

- After washing and drying the chain, oil it with a heavy-weight motor oil.

CAUTION:
Do not use any oil sold commercially as "drive chain oil". Such oil too can spoil the "O" rings (or seals).

CAUTION:
The standard drive chain is DAIDO D.I.D 520V$_2$ or TAKASAGO RK520M06. SUZUKI recommends that the above-mentioned standard drive chain be used for the replacement.

BRAKES

Inspect at Initially 1 000 km (2 months) and Every 6 000 km (12 months)
Replace hoses Every 4 years
Replace fluid Every 2 years

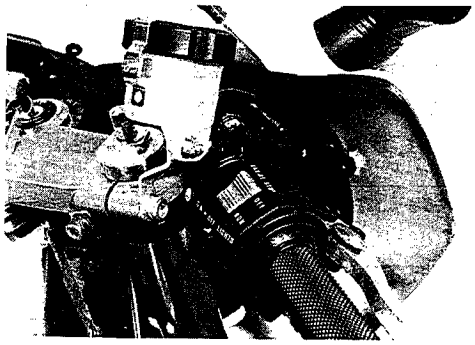

BRAKE FLUID LEVEL

- Keep the motorcycle upright and place the handlebars straight.
- Remove the right frame cover.
- Check the brake fluid level by observing the upper (only for rear brake) and lower (both front and rear brake) limit lines on the brake fluid reservoirs.
- When the level is below the lower limit line, replenish with brake fluid that meets the following specification.

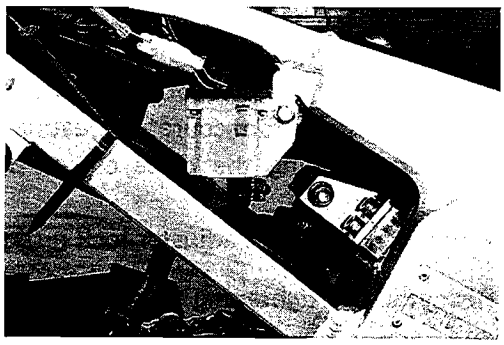

Specification and Classification: SAE J1703, DOT3 or DOT4

Downloaded from www.Manualslib.com manuals search engine

WARNING:
The brake system of this motorcycle is filled with a glycol-based brake fluid. Do not use or mix different types of fluid such as silicone-based and petroleum-based. Do not use any brake fluid taken from old, used or unsealed containers. Never re-use the brake fluid left over from the last servicing and stored for long periods.

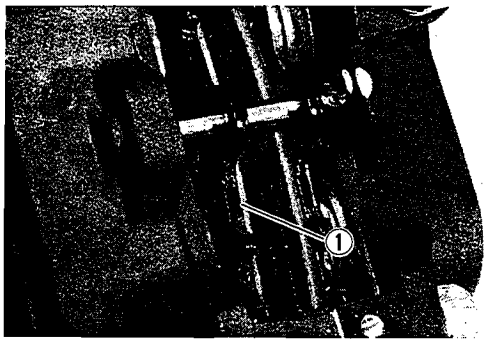

WARNING:
Brake fluid, if it leaks, will interfere with safe running and immediately discolor painted surfaces.
Check the brake hoses for cracks and hose joints for leakage before riding.

BRAKE PADS

Wearing condition of brake pads can be checked by observing the limit line ① marked on the pad. When the wear exceeds the limit line, replace the pads with new ones. (Refer to pages 0-0 and 0-0.)

BRAKE PEDAL HEIGHT

- Remove the right frame cover.
- Loosen the lock nut ②, and rotate push rod ③ to locate brake pedal 50 – 60 mm (2.0 – 2.4 in) Ⓐ below the top face of the footrest.
- Retighten the lock nut ② to secure the push rod ③ in the proper position.

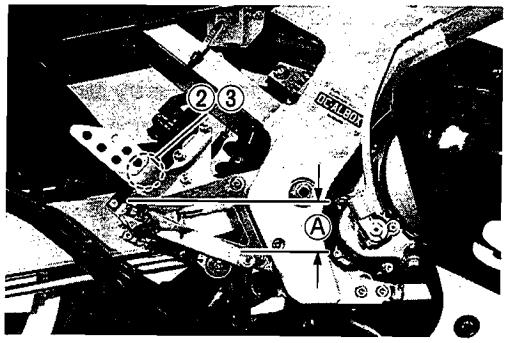

Brake pedal height: 50 – 60 mm (2.0 – 2.4 in)

BRAKE LIGHT SWITCHES

Adjust both brake light switches, front and rear, so that brake light will come on just before a pressure is felt when the brake lever is squeezed, or the brake pedal is depressed.

Downloaded from www.Manualslib.com manuals search engine

BLEEDING AIR FROM THE BRAKE FLUID CIRCUIT

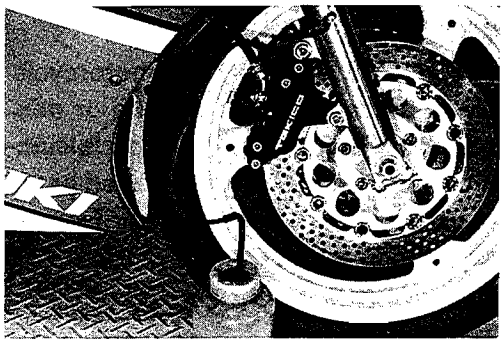

Air trapped in the fluid circuit acts like a cushion to absorb a large proportion of the pressure developed by the master cylinder and thus interferes with the full braking performance of the brake caliper. The presence of air is indicated by "sponginess" of the brake lever and also by lack of braking force. Considering the danger to which such trapped air exposes the machine and rider, it is essential that, after remounting the brake and restoring the brake system to the normal condition, the brake fluid circuit be purged of air in the following manner:

- Fill up the master cylinder reservoir to the upper end of the inspection window (for front brake) and upper line (for rear brake). Replace the reservoir cap to prevent entry of dirt.
- Attach a pipe to the caliper bleeder valve, and insert the free end of the pipe into a receptacle.

NOTE:
When bleeding the air, always start with the inboard valve, and then the outboard valve.

- Squeeze and release the brake lever several times in rapid succession, and squeeze the lever fully without releasing it. Loosen the bleeder valve by turning it a quarter of a turn so that the brake fluid runs into the receptacle; this will remove the tension of the brake lever causing it to touch the handlebar grip. Then, close the valve, pump and squeeze the lever, and open the valve. Repeat this process until the fluid flowing into the receptacle no longer contains air bubbles.

NOTE:
Replenish the brake fluid reservoir as necessary while bleeding the brake system.
Make sure that there is always some fluid visible in the reservoir.

- Close the bleeder valve, and disconnect the pipe. Fill the reservoir to the upper end of the inspection window (for front brake) and upper line (for rear brake).
- Rear brake: Differences between front and rear are that the master cylinder is actuated by a pedal.

Bleeder valve tightening torque: 6 – 9 N·m (0.6 – 0.9 kg-m)

CAUTION:
Handle the brake fluid with care: the fluid reacts chemically with paint, plastics, rubber materials, etc.

Downloaded from www.Manualslib.com manuals search engine

TIRES

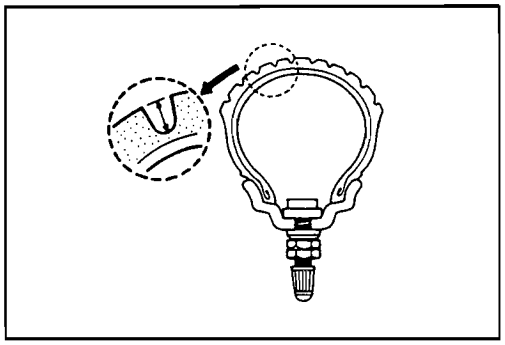

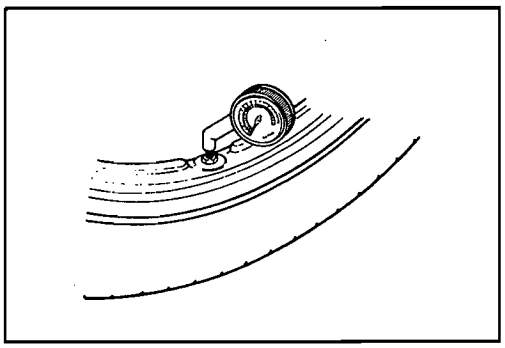

Inspect at Initially 1 000 km (2 months) and Every 6 000 km (12 months)

TIRE TREAD CONDITION

Operating the motorcycle with excessively worn tires will decrease riding stability and consequently invite a dangerous situation. It is highly recommended to replace the tire when the remaining depth of tire tread reaches the following specifications.

Tire tread depth limit

FRONT: 1.6 mm (0.063 in)
REAR: 2.0 mm (0.079 in)

TIRE PRESSURE

If the tire pressure is too high or too low, steering will be adversely affected and tire wear increased. Therefore, maintain the correct tire pressure for good roadability or shorter tire life will result. Cold inflation tire pressure is as follows.

	Solo riding		Dual riding	
	kg/cm²	kPa	kg/cm²	kPa
FRONT	2.00	200	2.00	200
REAR	2.25	225	2.50	250

CAUTION:
The standard tire fitted on this motorcycle is 110/70R17 53H for front and 140/60R18 64H for rear. The use of a tire other than the standard may cause instability. It is highly recommended to use a SUZUKI Genuine Tire.

Downloaded from www.Manualslib.com manuals search engine

STEERING

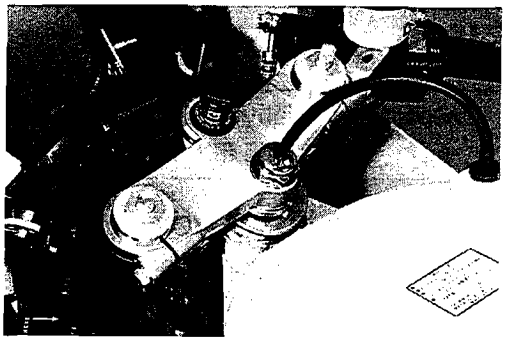

Inspect at Initially 1 000 km (2 months) and Every 6 000 km (12 months)

Bearings are applied on the steering system for better handling. Steering should be adjusted properly for smooth turning of handlebars and safe running. Too stiff steering prevents smooth turning of handlebars and too loose steering will cause poor stability.

Check that there is no play in the front fork assembly by grasping the lower fork tubes near the axle and pulling forward when the machine is supported with the front wheel off the ground and positioned straight ahead. If play is found, perform steering bearing adjustment. (Refer to page 7-21.)

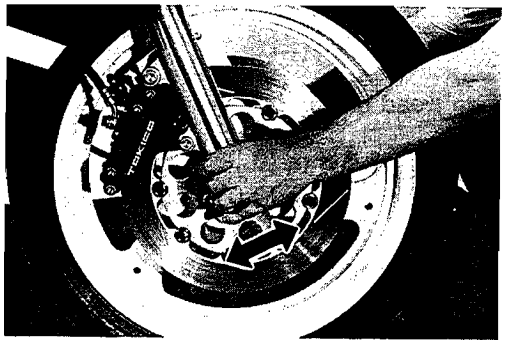

FRONT FORK

Inspect Every 12 000 km (24 months) **Inspect air pressure Every 6 months**

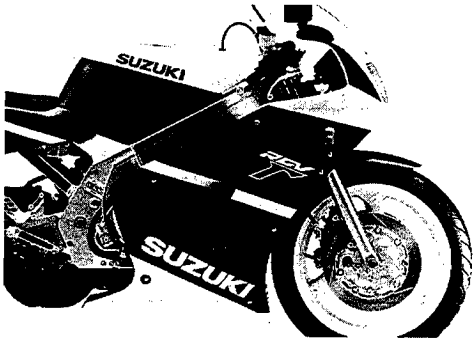

- Inspect the front forks for oil leakage, scoring and scratches on the outer surface of the inner tubes.
  Replace any defective parts, if necessary. (Refer to page 7-13.)

REAR SUSPENSION

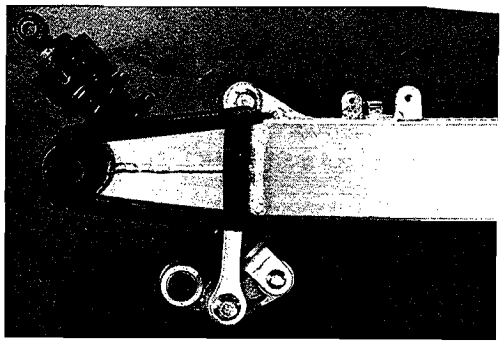

Inspect Every 12 000 km (24 months)

Inspect the rear shock absorber for oil leakage and check that there is no play in the swingarm assembly.

Downloaded from www.Manualslib.com manuals search engine

CHASSIS BOLTS AND NUTS

Tighten at Initially 1 000 km (2 months) and Every 6 000 km (12 months)

The nuts and botls listed below are important safety parts. They must be retightened when necessary to the specified torque with a torque wrench. (Refer to page 2-17 for the locations of the following nuts and bolts on the motorcycle.)

Item	N·m	kg·m
① Steering stem head nut	60 – 100	6.0 – 10.0
② Handlebars set bolt	6 – 10	0.6 – 1.0
③ Front fork upper clamp bolt	15 – 25	1.5 – 2.5
④ Front fork lower clamp bolt	15 – 25	1.5 – 2.5
⑤ Front fork cap bolt	15 – 30	1.5 – 3.0
⑥ Front axle shaft	50 – 80	5.0 – 8.0
⑦ Front axle clamp bolt	15 – 20	1.5 – 2.0
⑧ Handlebars mounting bolt	15 – 25	1.5 – 2.5
⑨ Front brake master cylinder mounting bolt	5 – 8	0.5 – 0.8
⑩ Front caliper mounting bolt	25 – 40	2.5 – 4.0
⑪ Front caliper housing bolt	18 – 23	1.8 – 2.3
⑫ Brake hose union bolt	15 – 20	1.5 – 2.0
⑬ Air bleeder valve (Front and rear)	6 – 9	0.6 – 0.9
⑭ Front and rear disc bolt	15 – 25	1.5 – 2.5
⑮ Swingarm pivot nut	85 – 110	8.5 – 11.0
⑯ Rear brake rod lock nut	15 – 25	1.5 – 2.5
⑰ Rear shock absorber mounting nut (Upper and lower)	40 – 60	4.0 – 6.0
⑱ Rear cushion lever nut	70 – 100	7.0 – 10.0
⑲ Rear cushion rod nut (Upper and lower)	70 – 100	7.0 – 10.0
⑳ Rear caliper housing bolt	18 – 23	1.8 – 2.3
㉑ Rear torque link nut (Front and rear)	22 – 34	2.2 – 3.4
㉒ Rear master cylinder mounting bolt	8 – 12	0.8 – 1.2
㉓ Rear axle nut	85 – 115	8.5 – 11.5
㉔ Rear sprocket nut	20 – 30	2.0 – 3.0
㉕ Front footrest bolt	15 – 25	1.5 – 2.5
㉖ Rear brake master cylinder hose union bolt	15 – 20	1.5 – 2.0
㉗ Rear brake caliper hose union bolt	20 – 25	2.0 – 2.5

Downloaded from www.Manualslib.com manuals search engine

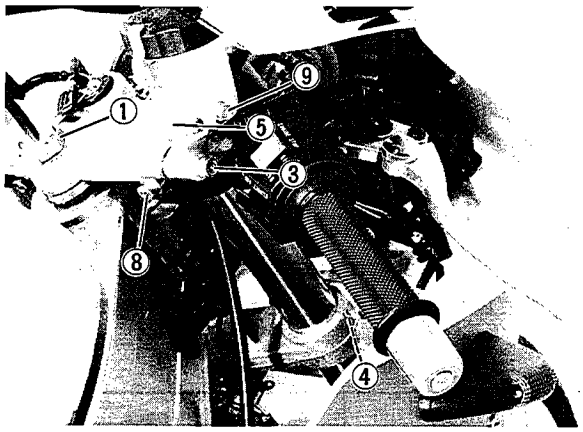

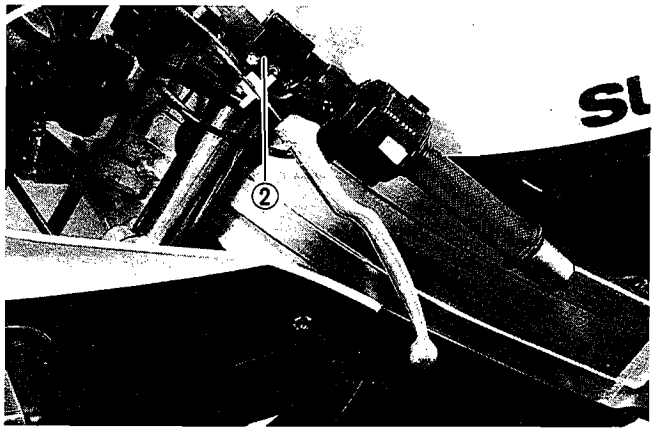

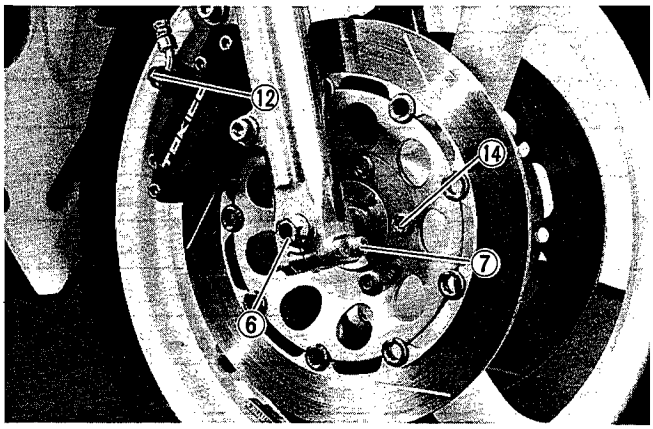

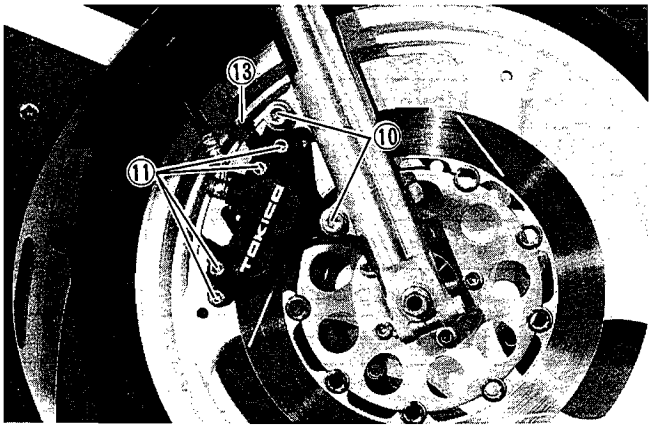

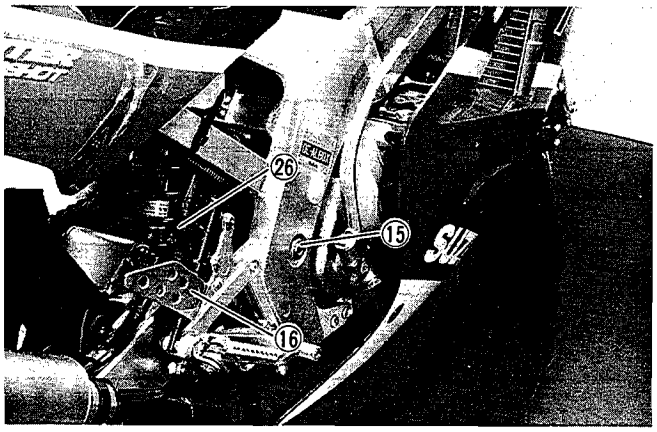

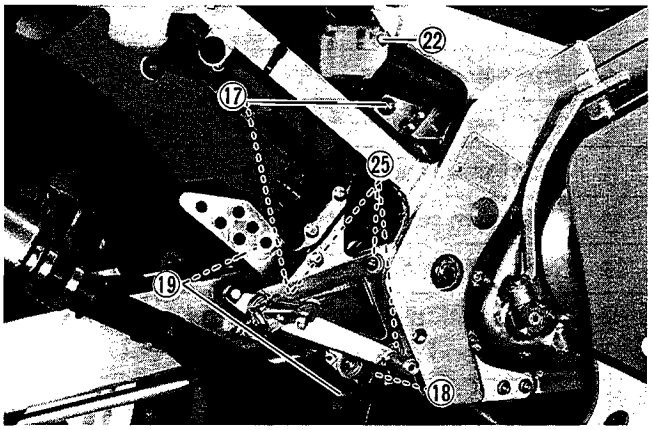

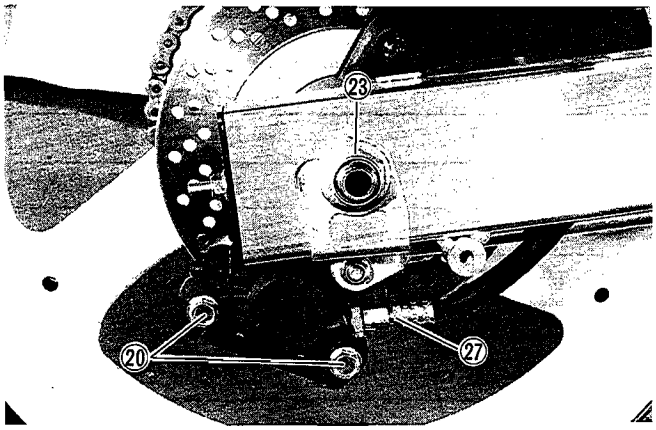

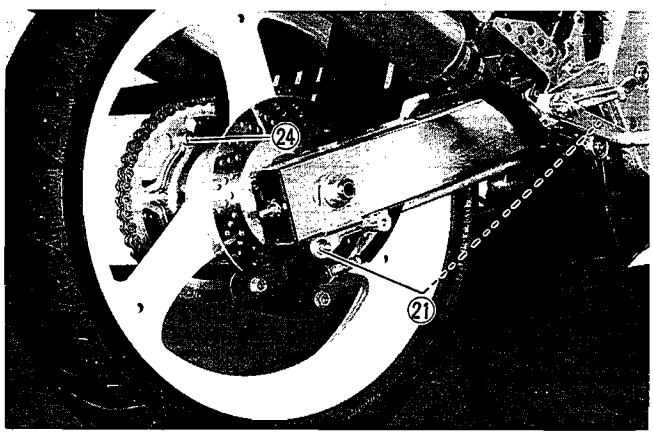

Downloaded from www.Manualslib.com manuals search engine

ENGINE

3

CONTENTS

ENGINE COMPONENTS REMOVABLE WITH ENGINE IN PLACE 3- 1

ENGINE REMOVAL AND REINSTALLATION 3- 2

ENGINE DISASSEMBLY 3-20

ENGINE COMPONENTS INSPECTION AND SERVICING 3-30

- CYLINDER HEAD 3-30
- CYLINDER AND EXHAUST VALVE 3-30
- PISTON 3-31
- PISTON PIN O. D 3-32
- PISTON RINGS 3-32
- BEARINGS 3-33
- OIL SEALS 3-33
- CRANKSHAFT 3-34
- CLUTCH PLATES 3-34
- GEARSHIFT FORK CLEARANCE 3-35

ENGINE REASSEMBLY 3-37

- TRANSMISSION GEARS AND RELATED PARTS 3-39
- COUNTER SHAFT 3-40
- DRIVE SHAFT 3-40
- KICK 3-44
- CLUTCH 3-44
- PISTON AND RINGS 3-50
- EXHAUST VALVE 3-51
- CYLINDER 3-52
- CILINDER HEAD 3-52

Downloaded from www.Manualslib.com manuals search engine

ENGINE COMPONENTS REMOVABLE WITH ENGINE IN PLACE

The parts listed below can be removed and reinstalled without removing the engine from the frame. Refer to the page listed in the section for removal and reinstallation instructions.

ENGINE LEFT SIDE

	See page
• Engine sprocket and drive chain	3- 5
• Magneto cover	3- 5
• Oil pump	3-16
• Gearshift lever	3-17
• Magneto stator	3-20
• Pick-up coil	3-20
• Neutral indicator switch	3-21

ENGINE CENTER

	See page
• Carburetors	3- 3
• Radiator	3- 4
• Muffler	3- 6
• Actuator	3- 8
• Cylinder head	3-18
• Cylinder and exhaust valve	3-18
• Piston	3-20
• Crankshafts	3-27
• Upper crankcase	3-29

ENGINE RIGHT SIDE

	See page
• Clutch cover	3-22
• Water pump	3-22
• Clutch	3-23
• Gearshift shaft	3-24
• Transmission assembly	3-24
• Primary drive and driven gears	3-25

Downloaded from www.Manualslib.com manuals search engine

ENGINE REMOVAL AND REINSTALLATION

ENGINE REMOVAL

Before taking the engine out of the frame, wash the engine with a steam cleaner, and drain transmission oil and cooling solution etc. The procedure of engine removal is sequentially explained in the following steps, and engine installation is effected by reversing the removal procedure.

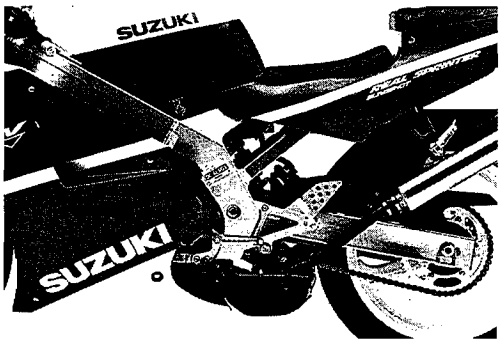

- Remove the lower fairings. (Refer to page 7-1.)
- Loosen the seat attaching bolt and remove the seat.
- Loosen the left frame cover attaching screws to detach the left frame cover.

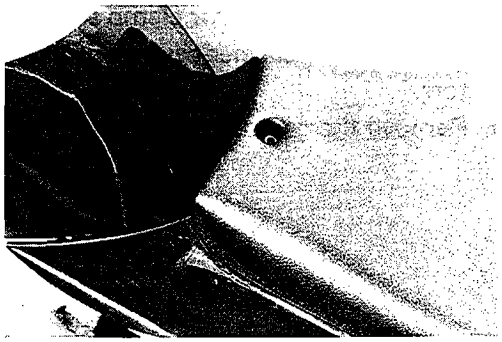

NOTE:
To prevent damage to the frame cover, the seat must be removed before frame cover is detached.

- Turn the fuel cock to the OFF position.
- Shfit the hose clip sideways and disconnect the fuel hose.
- Remove the fuel tank.

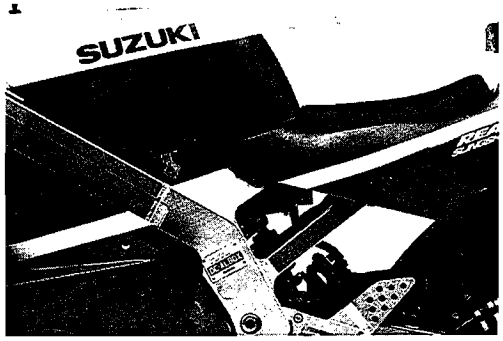

- Place an remove the oil drain plug and filler plug to drain out transmission oil.
- Remove the radiator cap and drain hose, and drain cooling solution completely.

① Transmission oil drain plug

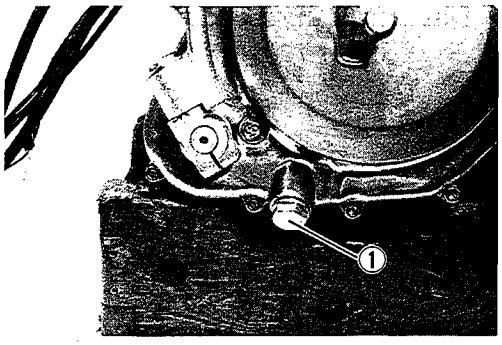

- Remove the air cleaner clamp screws.
- Remove the battery ⊖ and ⊕ lead wires.

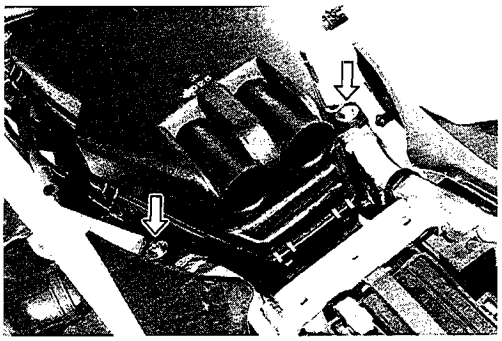

Downloaded from www.Manualslib.com manuals search engine

- Remove the idle adjustment bracket screws.
- Shift the hose clip sideways and disconnect the Suzuki Intake Pulse Control (S.I.P.C.) hoses.

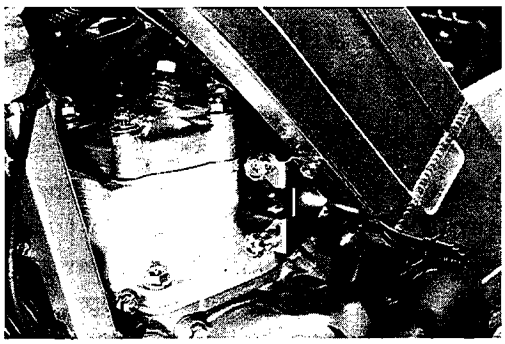

- Loosen the carburetor clamp screws.
- Move the air cleaner case rearward, and remove the carburetors.
- Remove the gearshift lever.

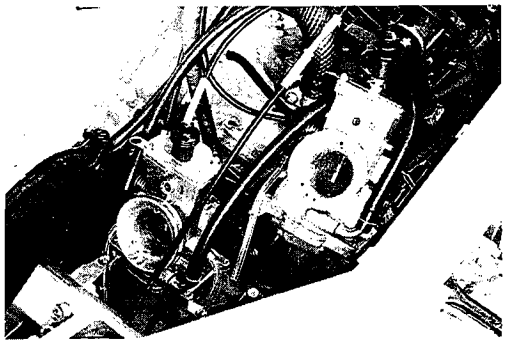

- Loosen the clamps and disconnect the following lead wires.
  - Neutral indicator switch lead.
  - Magneto lead
  - Regulator/Rectifier lead

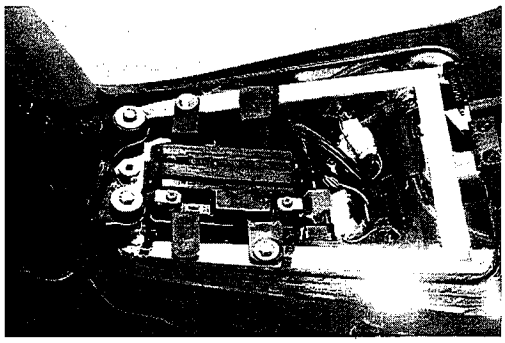

- Disconnect the spark plug caps from the spark plugs.

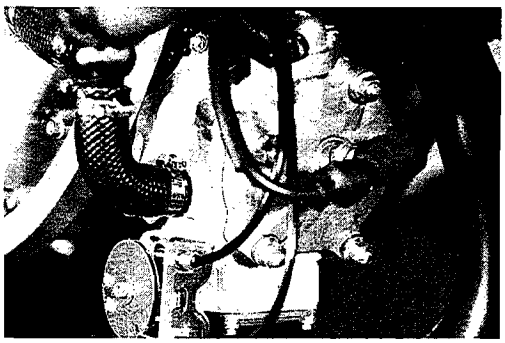

- Shift the hose clip sideways and disconnect the oil hose.

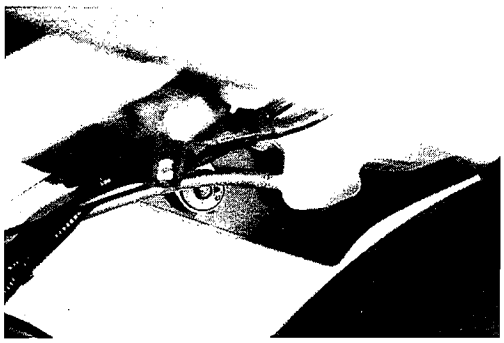

Downloaded from www.Manualslib.com manuals search engine

- Unclamp the radiator hoses at engine side and remove the radiator from the chassis.

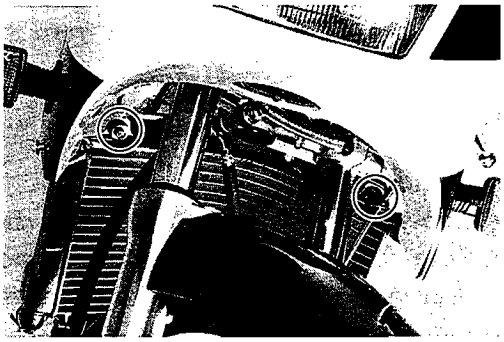

CAUTION:
When loosening the radiator mounting nuts, hold the damper with open end wrench.

Radiator mounting nut
tightening torque: 7 – 9 N·m (0.7 – 0.9 kg·m)

- Disconnect the clutch cable ①.

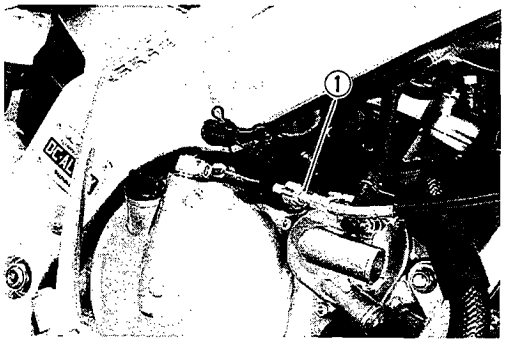

- Loosen the box bracket screws ②.

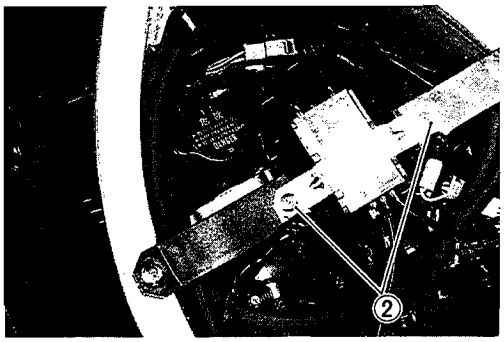

- Remove the junction box cap ③.

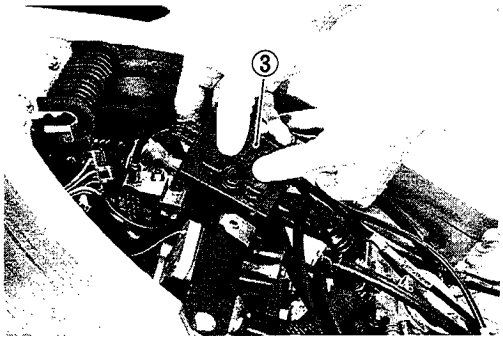

- Remove the magneto cover.

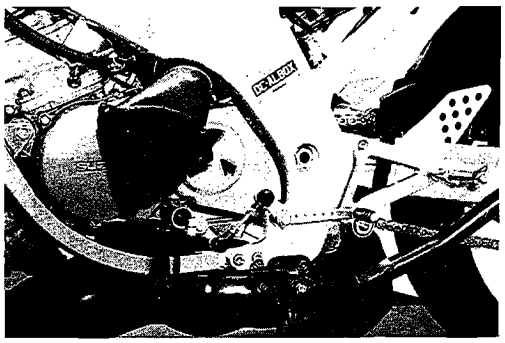

Downloaded from www.Manualslib.com manuals search engine

- Remove the engine sprocket from the drive shaft using the snap ring pliers.

09900-06107: Snap ring pliers

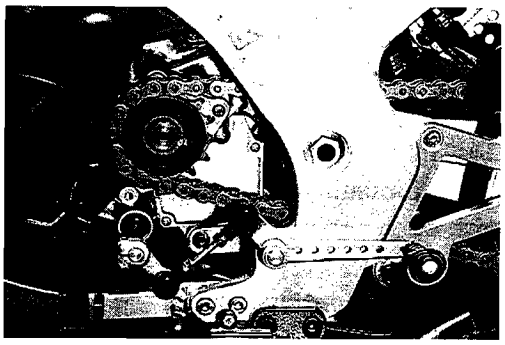

- Remove the gear shift lever.
- Loosen the rear axle nut and drive chain adjusters.
- Push the rear wheel forward or remove the rear wheel, and disengage the drive chain from the rear sprocket.
- Disengage the drive chain from the engine sprocket, and remove the engine sprocket.

- Remove the oil pump inspection cap.

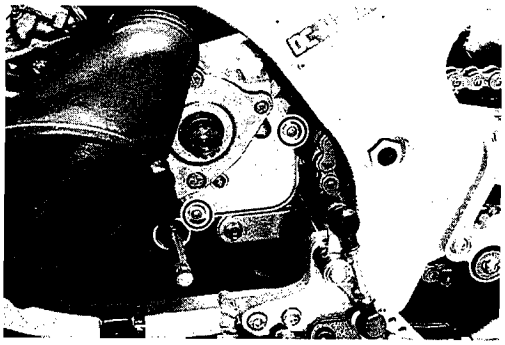

- Slightly pry the tab on the oil pump lever to remove the control cable.

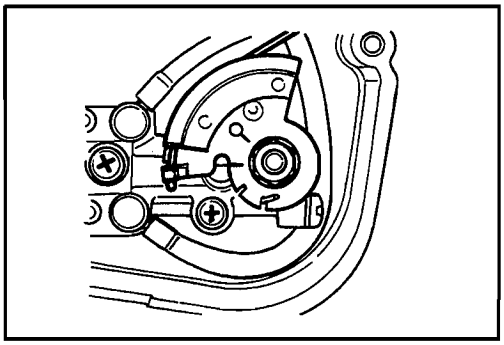

- Remove the side stand switch.

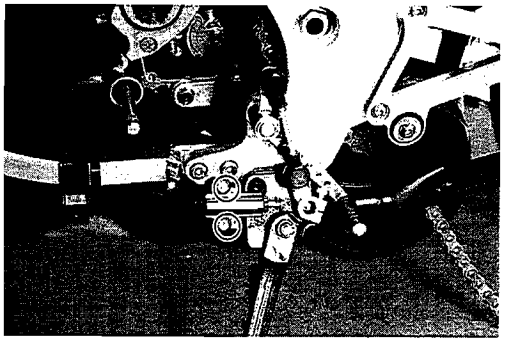

- Remove the right and left mufflers by unscrewing muffler mounting bolts and exhaust pipe clamp nuts.

NOTE:
When reinstalling the mufflers, always use a new exhaust pipe gasket.

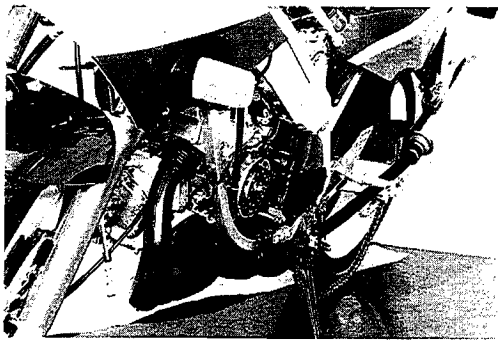

Downloaded from www.Manualslib.com manuals search engine

- Remove the three engine mounting nuts.
- Remove the engine mounting brackets.

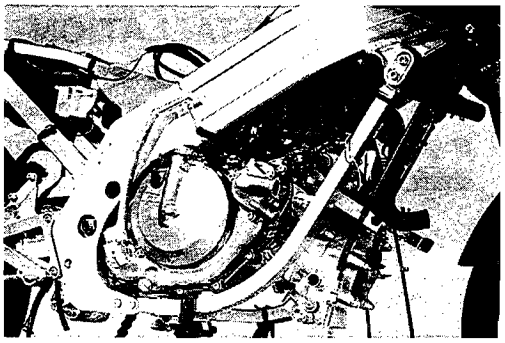

- Remove the engine mounting bolt ① and engine mounting bolt ②.

CAUTION:
Care should be taken not to drop the engine accidentally when the engine mounting bolts are removed.

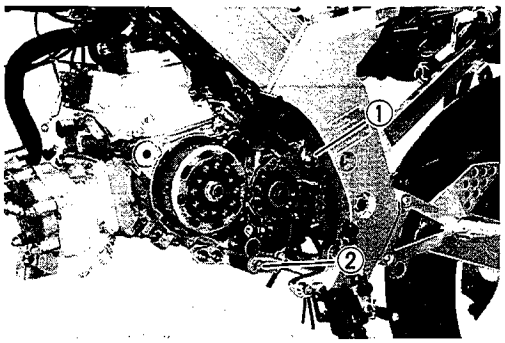

Downloaded from www.Manualslib.com manuals search engine

ENGINE REINSTALLATION

Reinstall the engine in the reverse order of engine removal.

- When remounting the engine, engage the drive chain to the engine sprocket and mount the engine sprocket to the drive shaft.

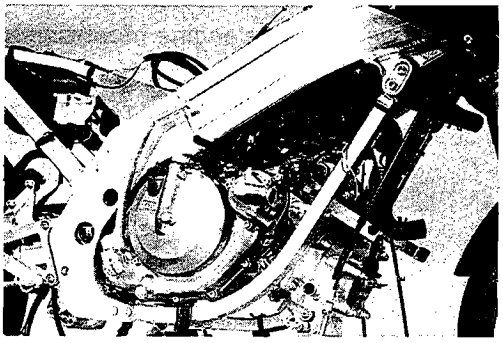

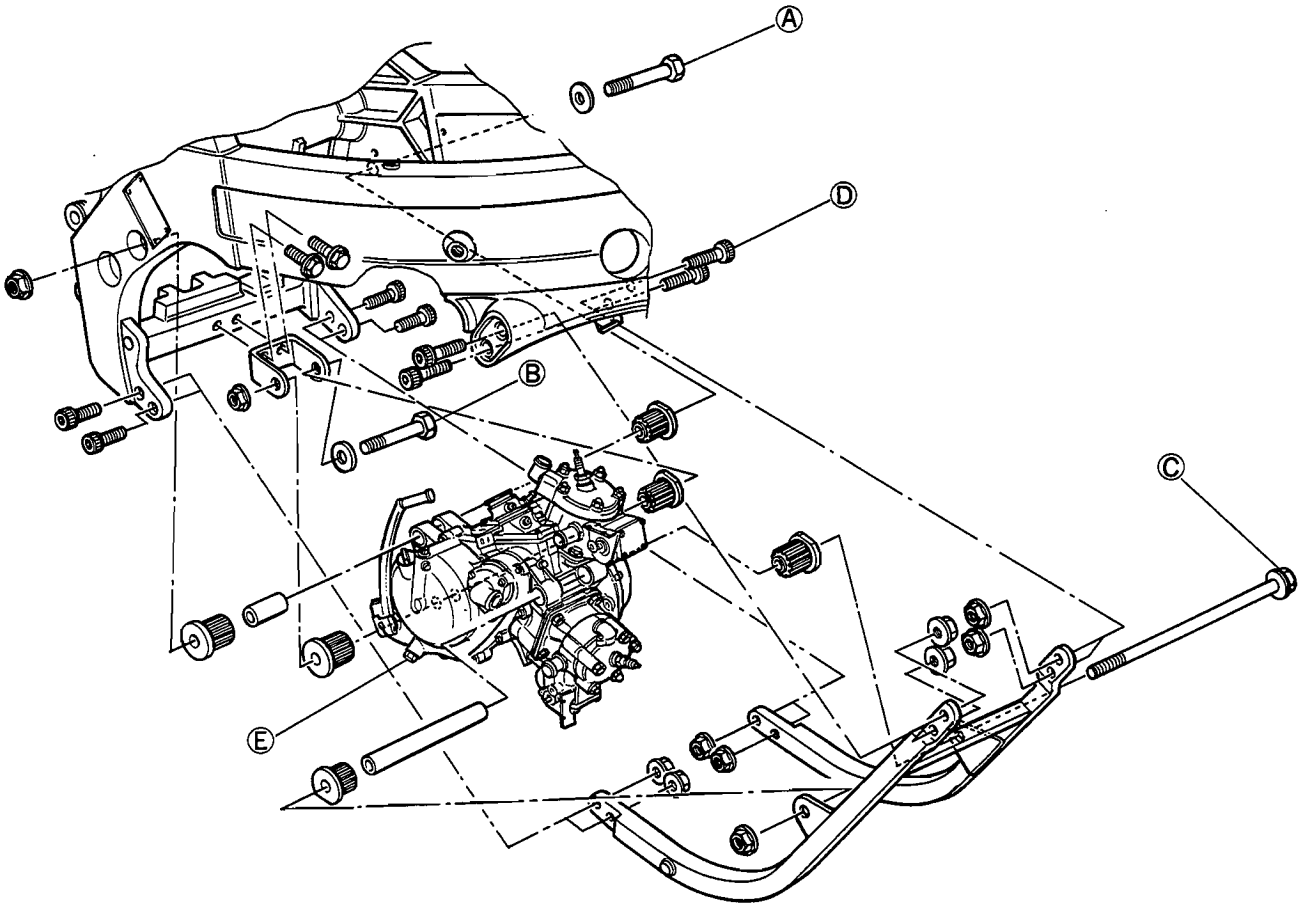

Tightening torque

Ⓔ	N·m	kg-m
Transmission oil drain plug	20 – 25	2.0 – 2.5

Tightening torque

Item	N·m	kg-m
Ⓐ	60 – 70	6 – 7
Ⓑ	28 – 34	2.8 – 2.4
Ⓒ	60 – 72	6.0 – 7.2
Ⓓ	22 – 28	2.2 – 2.8

Downloaded from www.Manualslib.com manuals search engine

- Disconnect the oil control cable ①.
- Disconnect the throttle cables ② and ③.
- Disconnect the actuator cable ④.
- Disconnect the throttle cable ⑤.

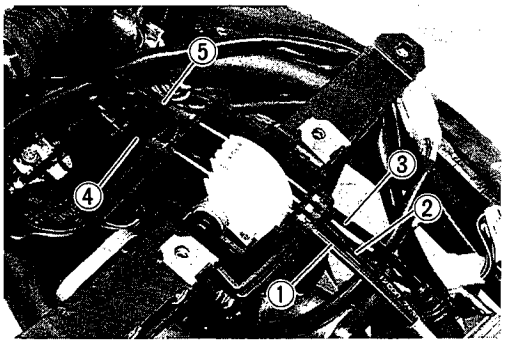

- Loosen the exhaust valve cable adjuster ⑥.
- Remove the exhaust valve cable bracket ⑦.
- Remove the exhaust valve cables ⑧ from the pulley.

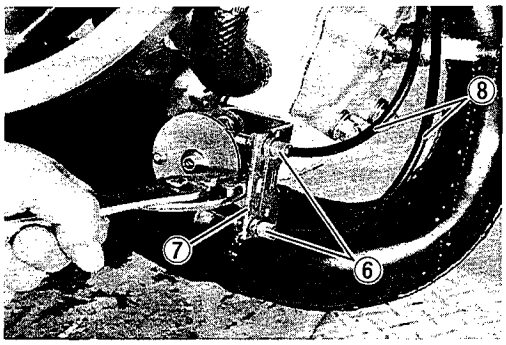

- Remove the thermostat case ⑨.
- Remove the electric parts holder ⑩ from the frame.
- Remove the actuator assembly ⑪.

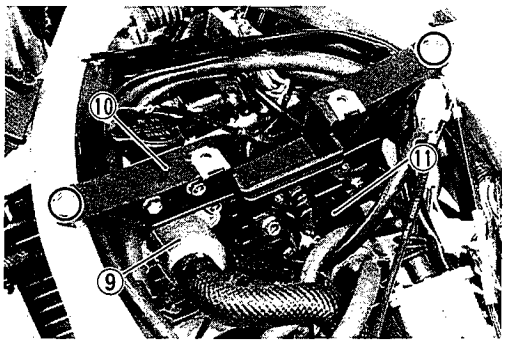

- Remove the actuator pulley ⑫ from the shaft.
- Disconnect the cables ⑬.

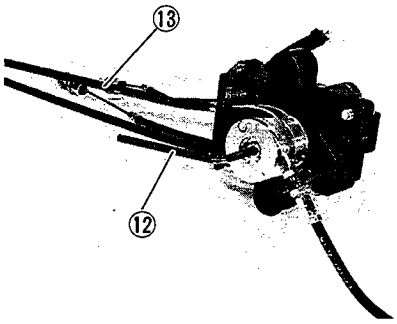

ACTUATOR AND CABLE ASSEMBLY

- Verify that the line Ⓐ on the actuator shaft is pointing the line Ⓑ on the body.

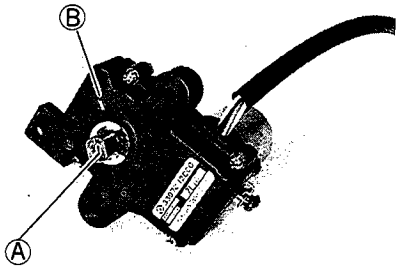

Downloaded from www.Manualslib.com manuals search engine

- Install the actuator cable bracket ① on the actuator assembly. Note that there are two lines, Ⓒ and Ⓓ, on the bracket:
  Line Ⓒ — full close position;
  Line Ⓓ — full open position.

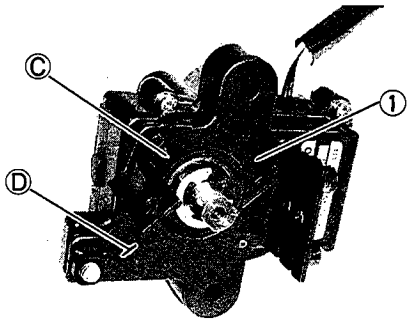

① Throttle cable adjuster (carburetor side)
② Oil pump cable adjuster
③ Actuator cable adjuster
④ Throttle cable adjuster (throttle grip side)
⑤ Left exhaust valve cable adjuster
⑥ Right exhaust valve cable adjuster

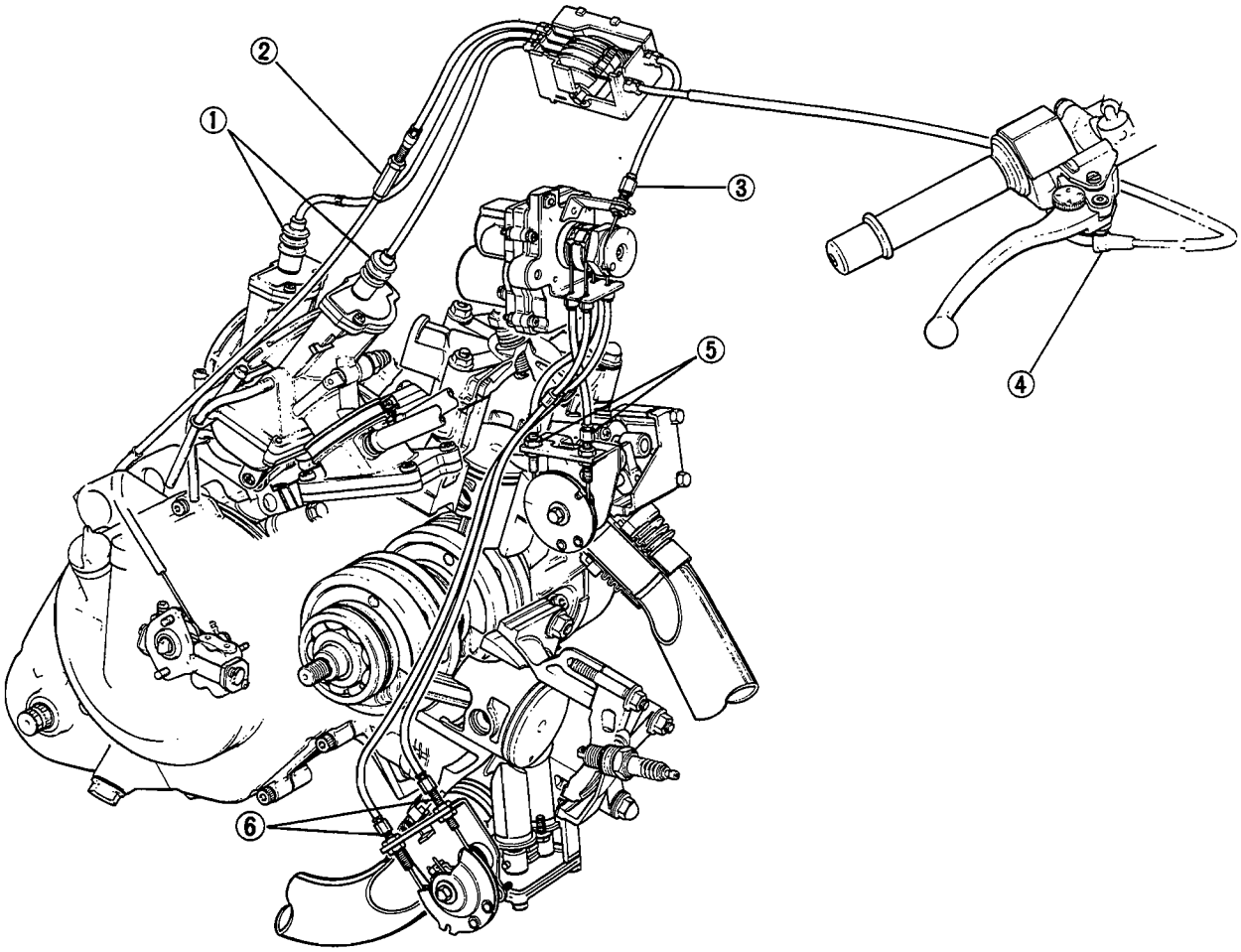

Downloaded from www.Manualslib.com manuals search engine

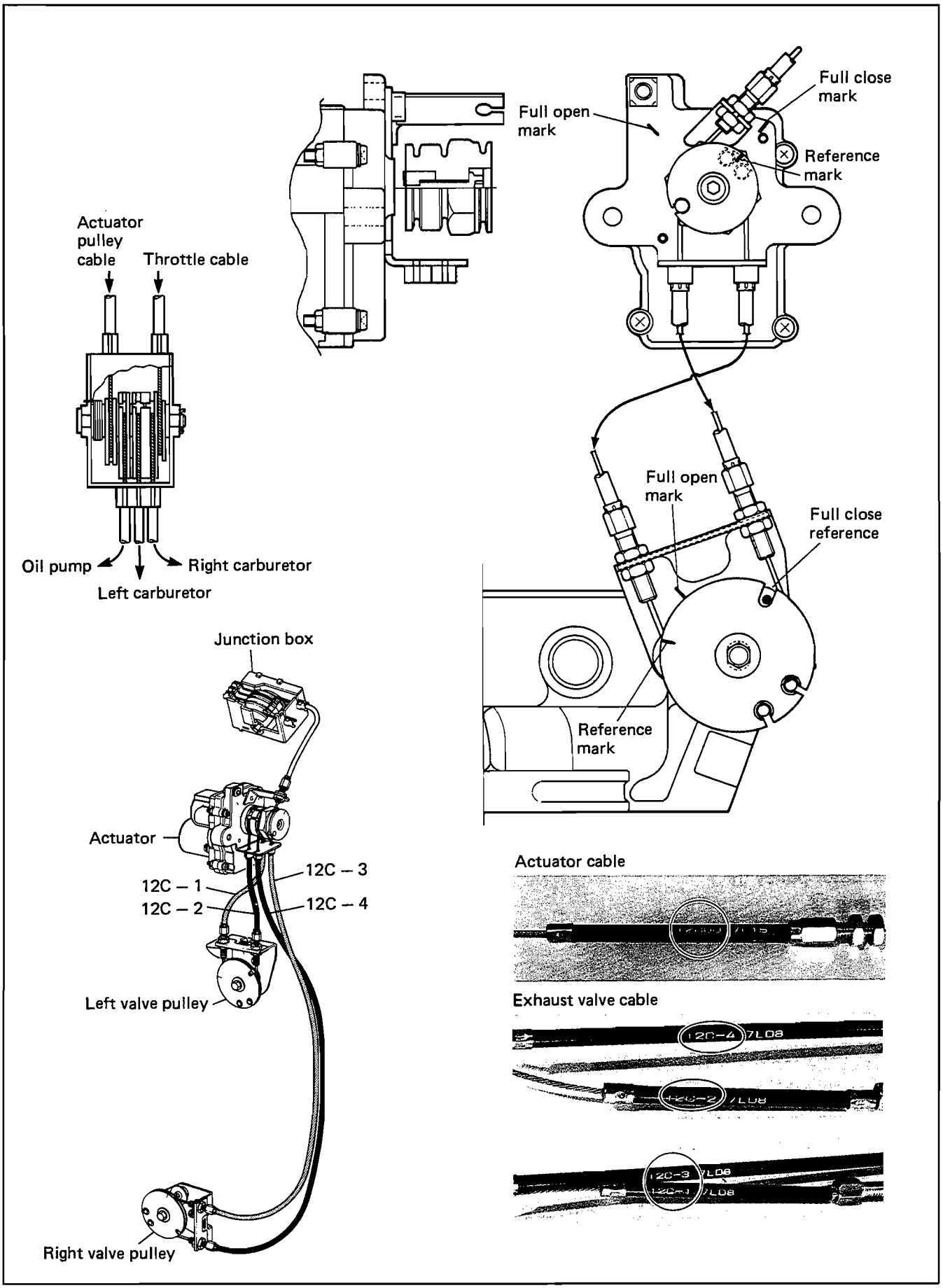

Downloaded from www.Manualslib.com manuals search engine

- Connect all the cables to the actuator pulley ⑤ properly.
  - Cable ① identification marking: (12C-1)
  - Cable ② identification marking: (12C-2)
  - Cable ③ identification marking: (12C-3)
  - Cable ④ identification marking: (12C-4)
- Mount the pulley ⑤ on the actuator.

Tightening torque: 4 – 6 N·m (0.4 – 0.6 kg-m)

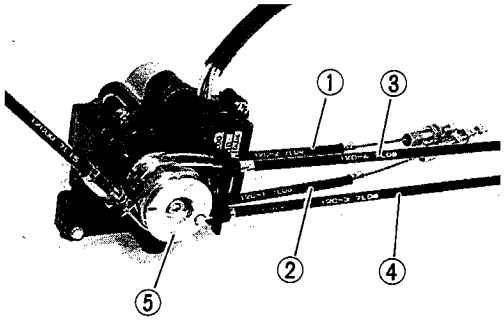

- Install the actuator assembly ⑥ to the electric parts holder.
- With the actuator mounted, install the electric part holder ⑦ on the frame.
- Install the thermostat case ⑧.

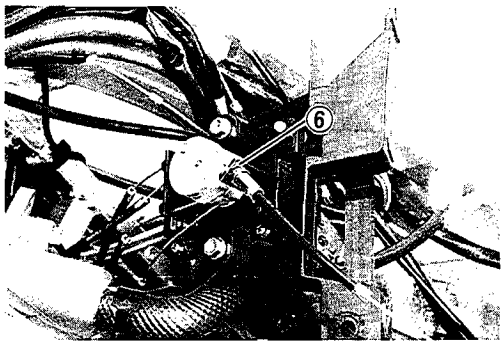

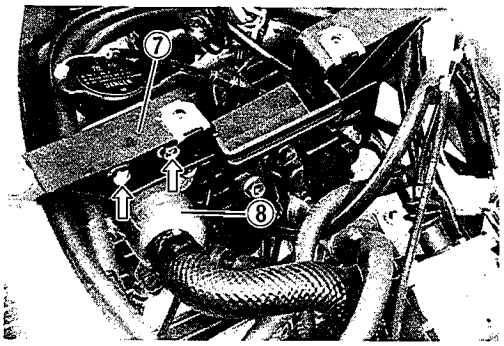

- Assemble the throttle cable pulleys.
  - Throttle cable pulley ⑨
  - Oil pump pulley ⑩
  - Actuator pulley ⑪
  - Spring ⑫
- Insert the pulley shaft in position.

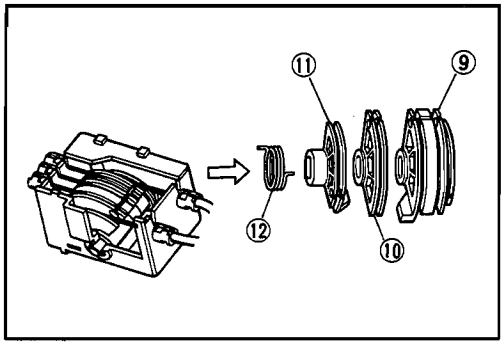

- Connect the cables.
  - Throttle cable No. 1: ⑬
  - Throttle cable No. 2: ⑭
  - Throttle cable No. 3: ⑮
  - Actuator cable ⑯
  - Oil pump cable ⑰
- Cover the junction box properly with its cap.

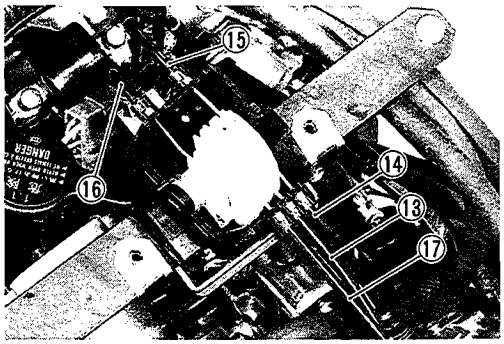

Downloaded from www.Manualslib.com manuals search engine

ENGINE REINSTALLATION

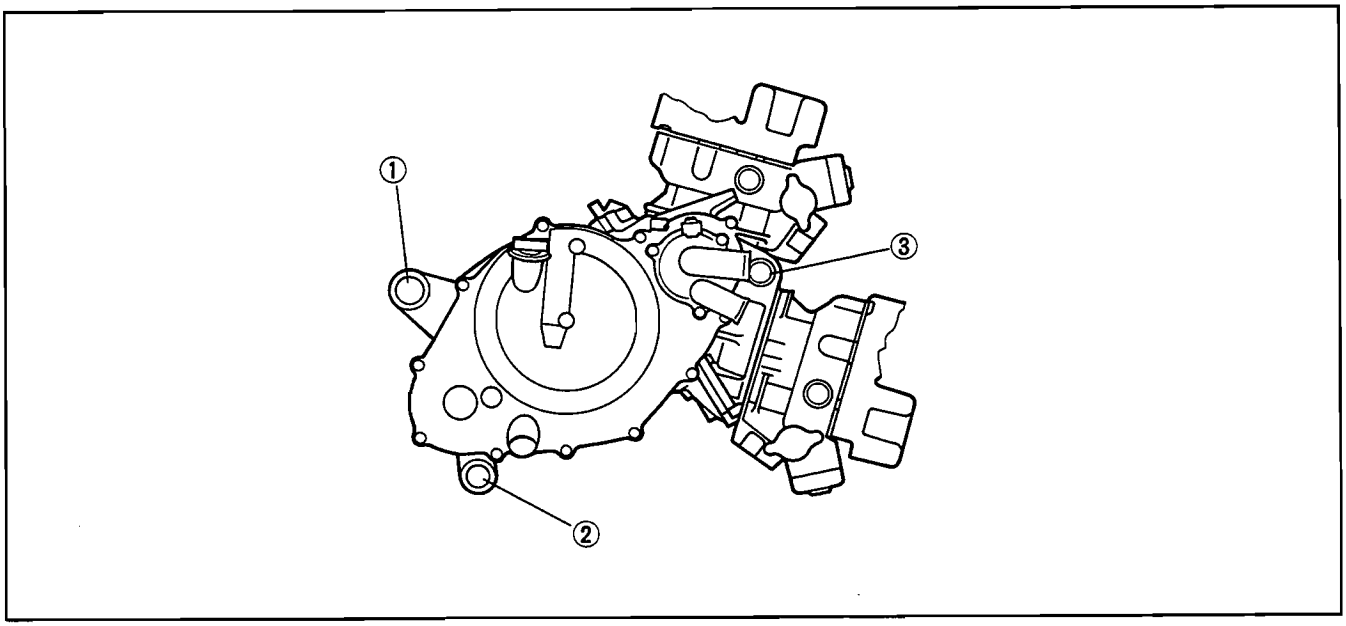

- Position the engine assembly on the frame and insert the rear mounting bolt ① then the under mounting bolt ②.

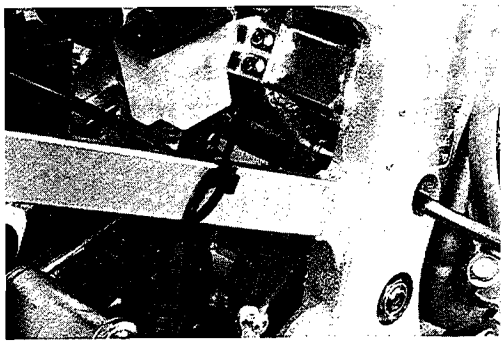

- Attach the frame down tube ④ on the frame and insert the engine front mounting bolt ③.
- Tighten the frame down tube attaching bolts and nuts ⑤, ⑥, ⑦ and ⑧ temporarily.
- When all the fasteners are positioned properly, tighten them to the specified torque:

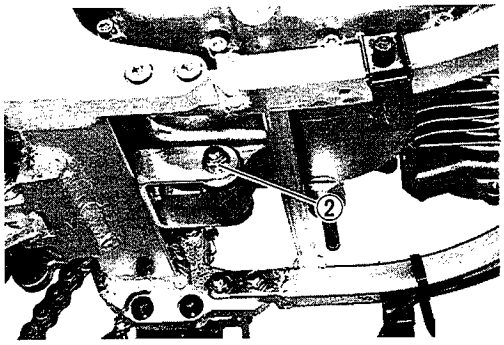

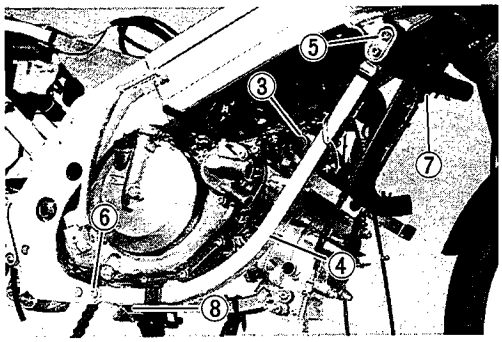

Downloaded from www.Manualslib.com manuals search engine

- Install the water hoses ⑨, ⑩ , ⑪ and ⑫.
- Secure the water hoses with clamp properly.

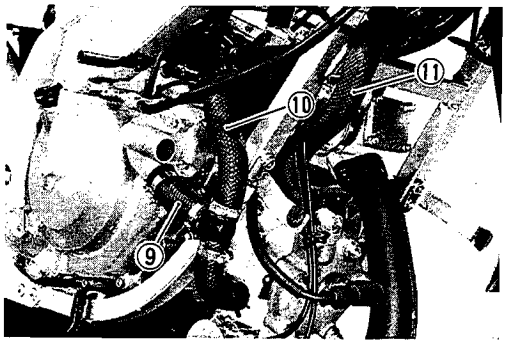

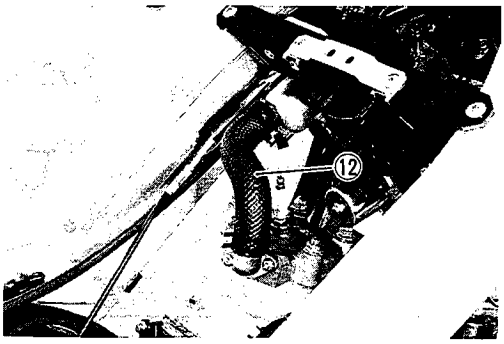

- Install the radiator assembly.
- Install the water hoses, ⑬ and ⑭ .
- Secure the water hoses with clamp properly.

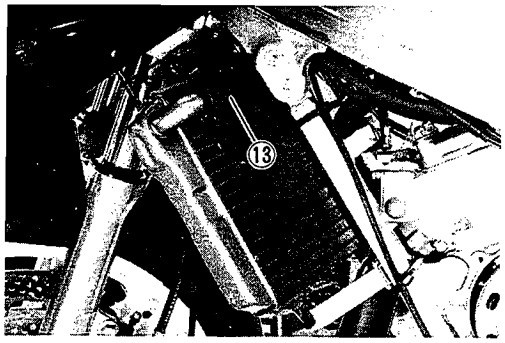

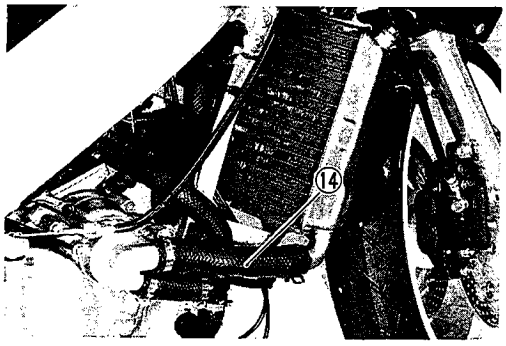

- Connect the transmission oil overflow hose ⑮.

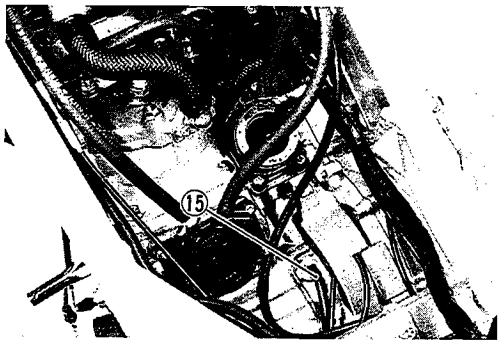

Downloaded from www.Manualslib.com manuals search engine

EXHAUST VALVE PULLEY ADJUSTMENT

- Turn on the ignition switch.

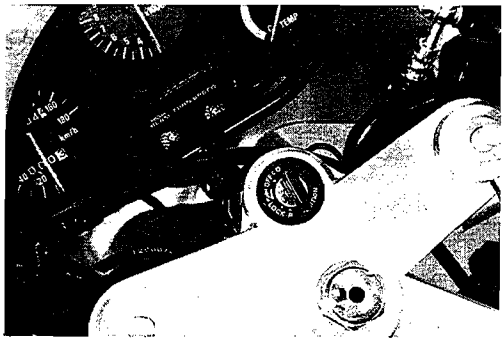

- Check that the index line ① on the actuator pulley is pointing to the line ② on the bracket.

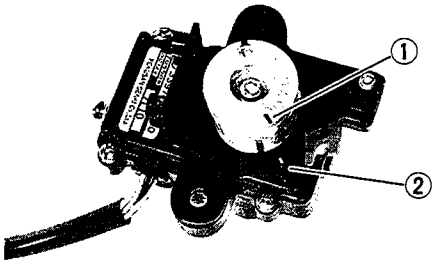

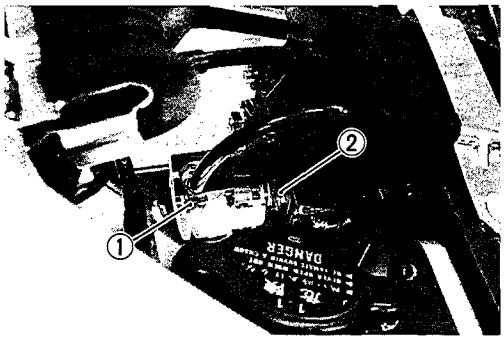

- Connect the exhaust valve control cables to the pulleys.

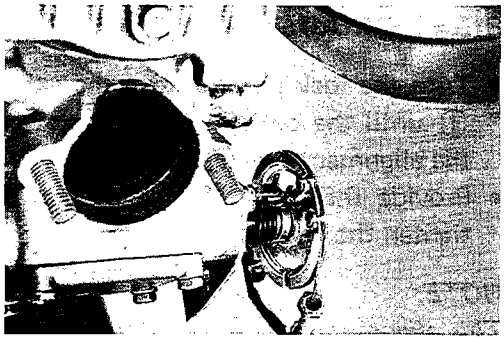

- Hitch the spring end ③ to the pulley lever ④ and tighten the pulley.

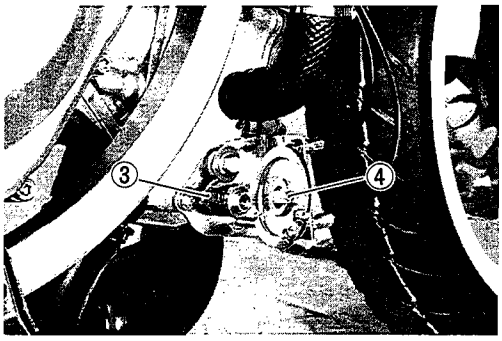

Downloaded from www.Manualslib.com manuals search engine

- Verify that the spring end ⑤ is securely hitched to the exhaust valve lever ⑥.

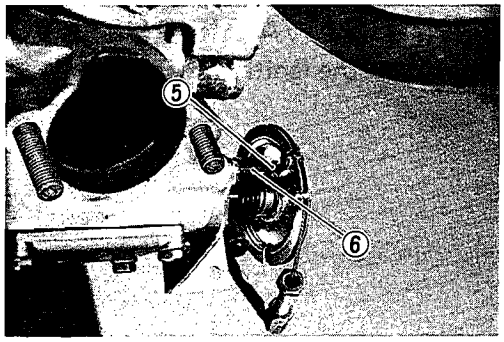

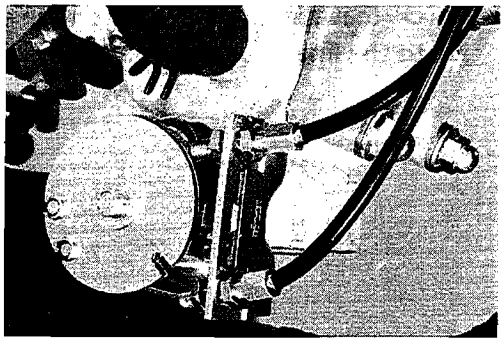

- Slacken the cable by loosening the cable adjusters ⑦. Do the same procedure also on the left exhaust valve.

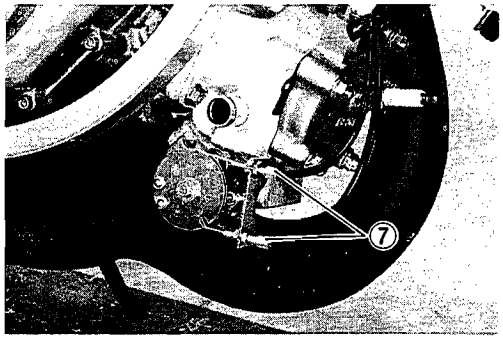

RIGHT EXHAUST VALVE CABLE ADJUSTMENT

- Turn the lock nut to move the exhaust valve cable adjuster ① until the pulley alignment slot comes in alignment with the alignment hole Ⓑ.
- Provide 0.5 mm (0.02 in) of play on the cable ② and tighten the adjuster lock nuts.

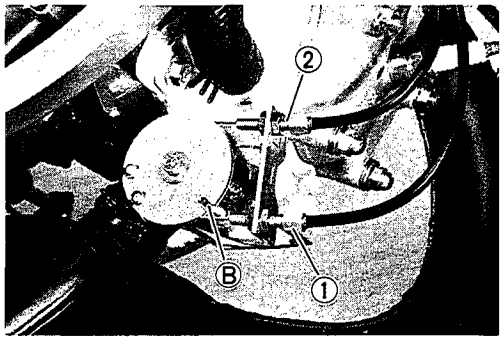

NOTE:
This alignment procedure is carried out with the pulley spring tension effective.

Downloaded from www.Manualslib.com manuals search engine

LEFT EXHAUST VALVE CABLE ADJUSTMENT

- Turn the lock nut to move the exhaust valve cable adjuster ③ until the pulley alignment slot comes in alignment with the alignment hole Ⓑ.
- Give the cable ④ 1 mm of slack as measured by deflection when the inner cable is lightly pushed sideways by finger.
- Tighten the lock nuts.

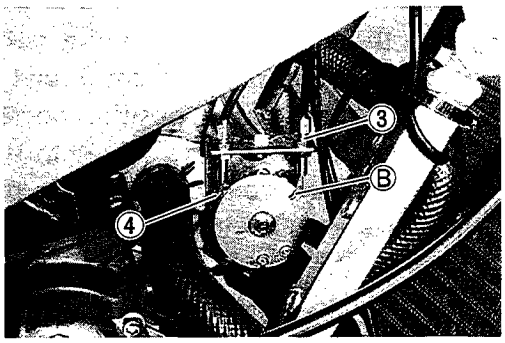

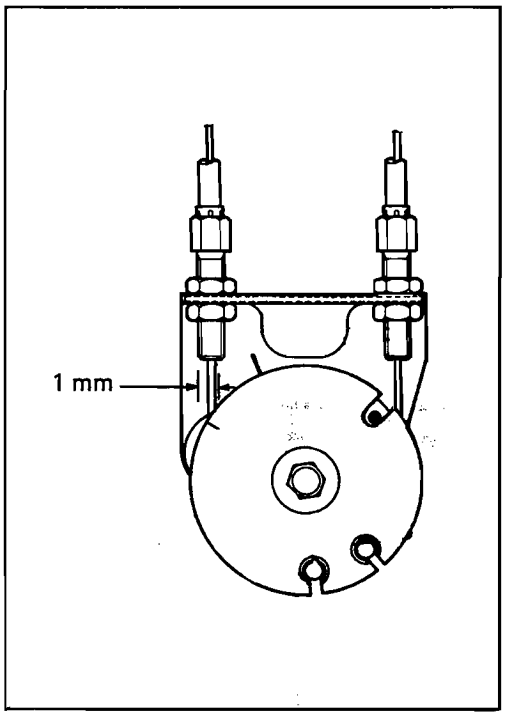

ACTUATOR AND EXHAUST VALVE FUNCTION CHECK

NOTE:
The ignitor checker can be used for this check.

- When the ignition switch is turned on, the actuator slowly turns until it reaches the full close position (from which the operation begins).
  With the pulley's index line Ⓒ aligned with line Ⓓ on the bracket, check the exhaust valve pulley position. The exhaust valve pulley should take the position where its alignment slot Ⓐ aligns with the alignment hole Ⓑ.

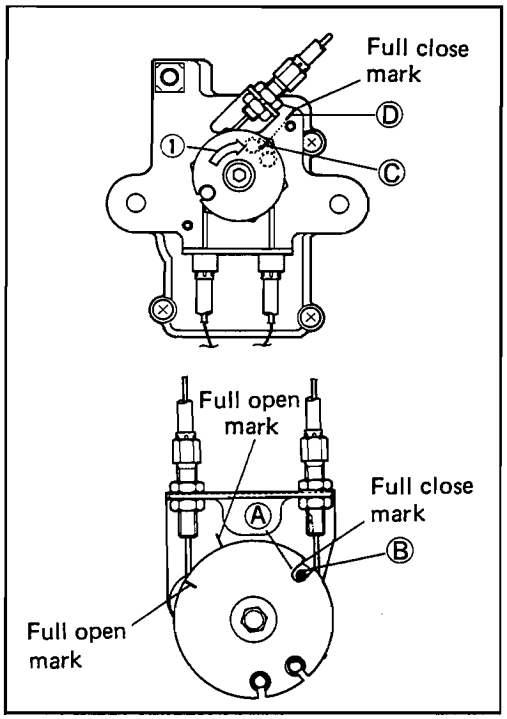

Downloaded from www.Manualslib.com manuals search engine

- Start the engine and raise the revolutions to more than 8 000 – 8 500 rpm and check that the actuator pulley returns to the full open position where the pulley's index line Ⓒ is pointing the line Ⓖ. With the actuator held in this position, check the exhaust valve pulley position. The exhaust valve pulley index line Ⓔ should be approximately at the line Ⓕ.

NOTE:
The actuator stops and holds the current pulley position the moment the ignition switch is turned off. This feature may be used for facilitating the pulley alignment inspection procedure.

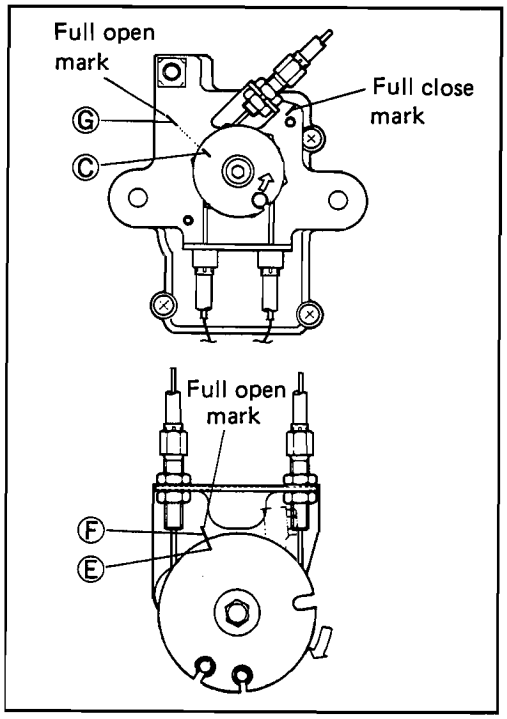

ACTUATOR CABLE ADJUSTMENT

- Verify that the actuator pulley adjustment is properly made.
- Verify that the oil pump cable is properly adjusted relative to the throttle cable (adjusted at the 1/2 opening).
- Verify that the throttle cable is not tensioned.
- Turn the actuator cable adjuster ① to pull the cable and stop it at the position where the oil pump cable pulley ② begins to move. At this position, set the actuator cable adjuster and tighten the lock nut.

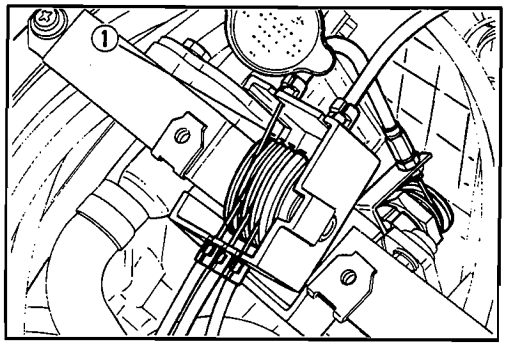

CAUTION:
This adjustment must be made when the junction box is positioned in the actual location.

NOTE:
Actuator cable play: 0 mm (0 in)

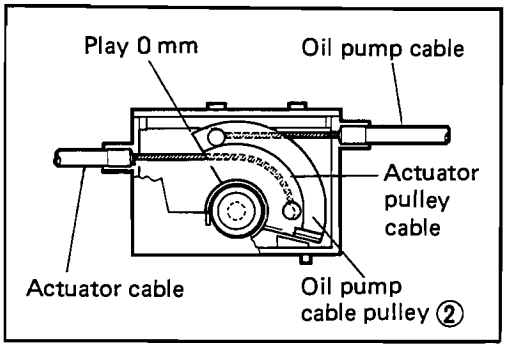

Downloaded from www.Manualslib.com manuals search engine

- The oil pump lever line ③ should come approximately to the line ④ on the body when the engine is revved over 8 500 rpm.

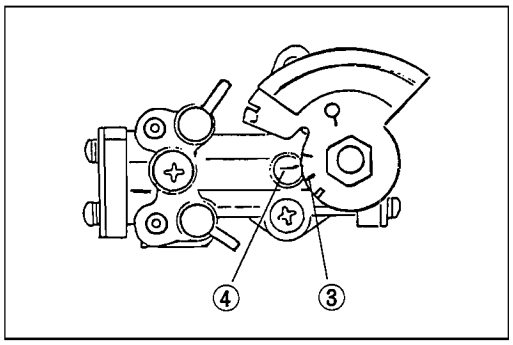

- Pour 700 ml (23.7/24.6 US/Imp oz) (when overhauling engine) of transmission oil **SAE 10W/40 MOTOR OIL** into the engine. Check the oil level by removing the transmission oil level screw ①.

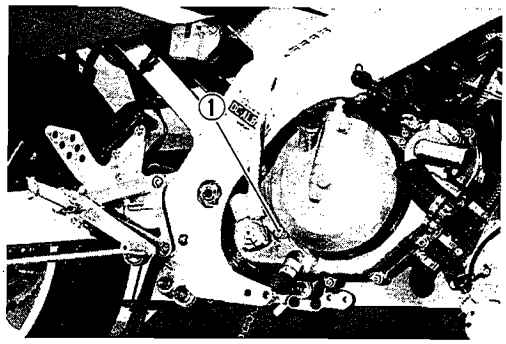

- Install the gear shift lever and adjust the height Ⓐ by turning the adjuster ②.

Gearshift pedal height: 50 – 60 mm (1.97 – 2.36 in)

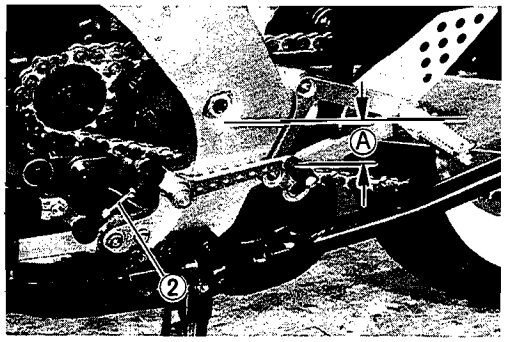

Downloaded from www.Manualslib.com manuals search engine

- After remounting the engine, route wiring harness, hoses and cables properly by referring to the sections, wire routing and cable routing, and adjust the following items to the specification.

	Page
* Rear brake pedal	2-12
* Brake light switch	2-12
* Clutch cable	2- 8
* Throttle cables	2- 6
* Choke cables	2- 6
* Idling adjustment	2- 5
* Filling cooling solution	2- 8
* Exhaust valve operation	6-11
* Oil pump control cable	2- 7
* Bleeding air from oil pump	4- 9

Downloaded from www.Manualslib.com manuals search engine

ENGINE DISASSEMBLY

- Remove the kick starter lever.

Tightening torque: 18 – 28 N·m (1.8 – 2.8 kg-m)

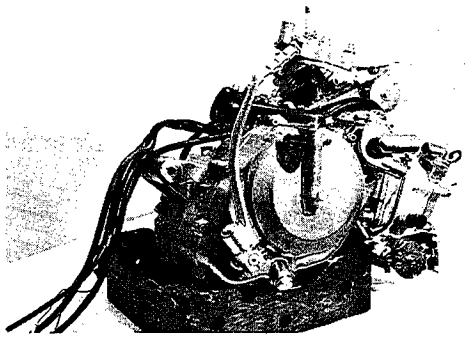

- Remove the cylinder head.

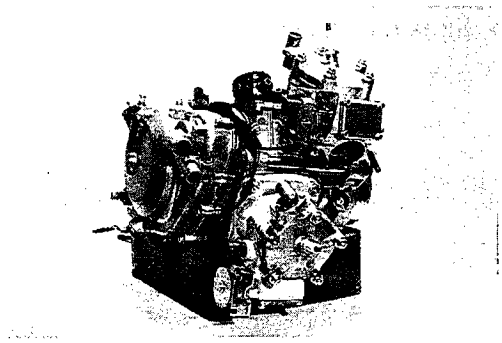

- Remove the cylinder.

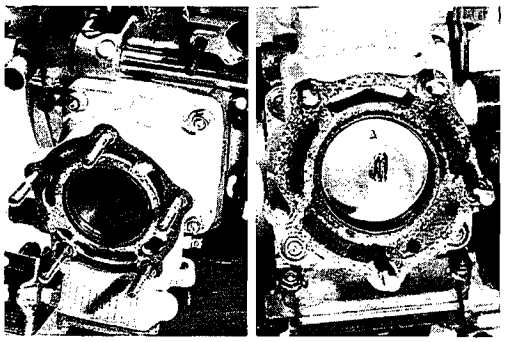

- Remove the exhaust valve pulley Ⓐ.

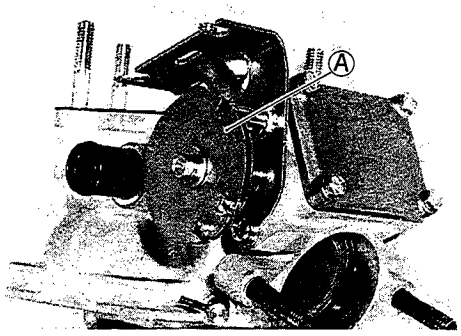

- Remove the exhaust valve pulley lever ①.
- Remove the exhaust valve lever set screw ② and washer ③.
- Remove the cylinder cover ④.

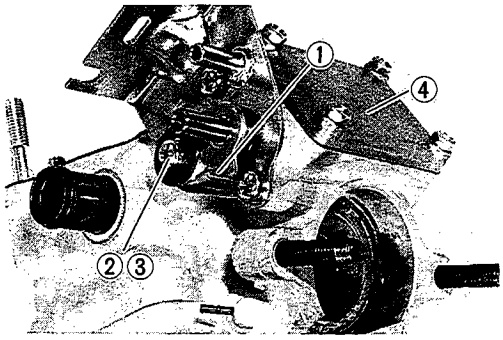

Downloaded from www.Manualslib.com manuals search engine

- Loosen the exhaust valve shaft arm bolt ⑤.
- Pull out the shaft ⑥.
- Remove the spacer ⑦.
- Remove the exhaust valve shaft arm ⑧.

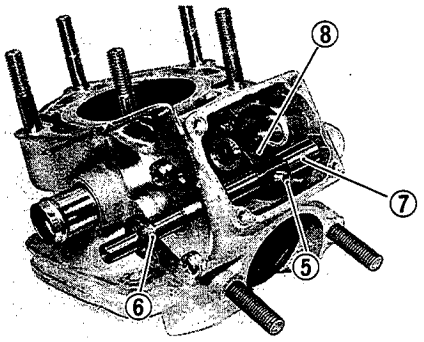

- Slide out the exhaust valve assembly ⑨.

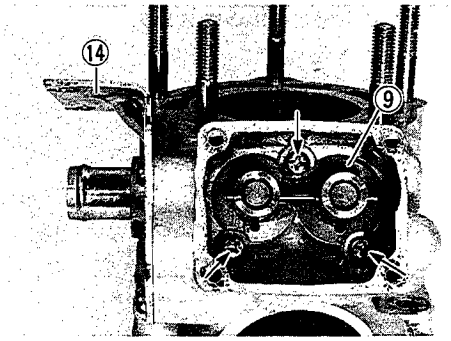

- Disassemble the spacer ⑩, pin ⑪, valve ⑫ and guide ⑬.

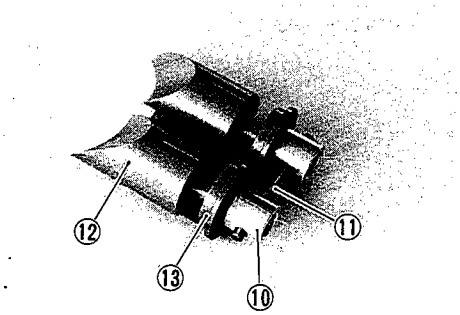

- Remove the oil seal retainer ⑭.
- Remove the oil seal ⑮.

09921-20200: Bearing remover

NOTE:
Disassemble the Right cylinder in the same way at Left.

CAUTION:
Do not confuse the disassembled parts between the Left and Right cylinders.

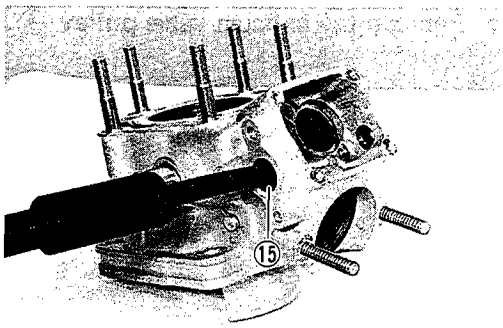

Downloaded from www.Manualslib.com manuals search engine

- Place a cloth beneath the piston so as not to drop the parts in the crankcase, and remove the circlip.

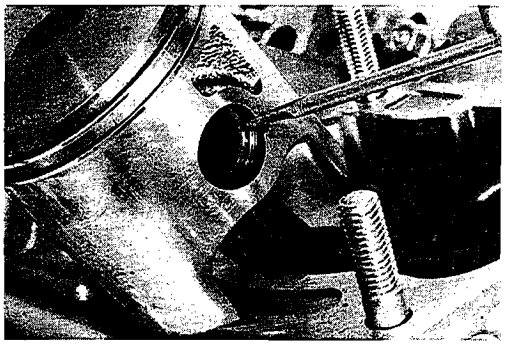

- Remove the piston, piston pin bearing and thrust washers.

09910-34510: Piston pin pulley

NOTE:
Scribe the cylinder No. on the piston crown.

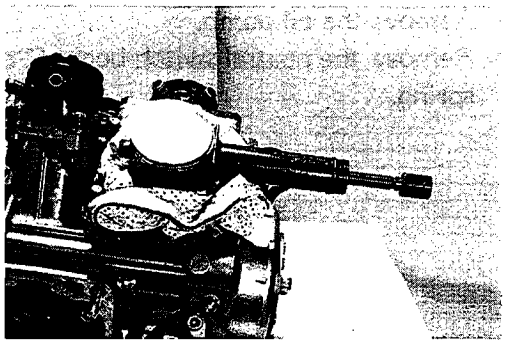

- Remove the magneto rotor nut while holding the rotor with the special tool.

09930-40113: Rotor holder

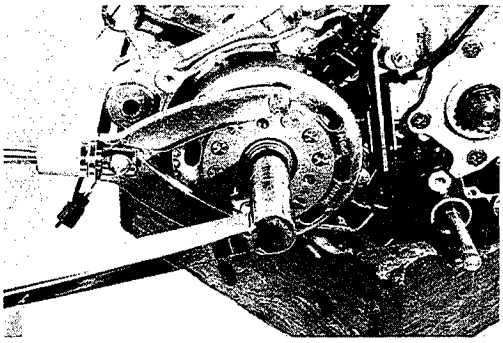

- Remove the rotor with the special tool.

09930-30190: Attachment F

- Remove the key from the crankshaft.

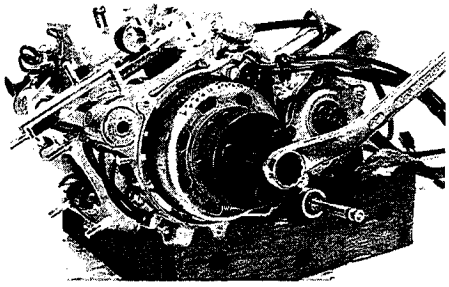

- Remove the signal generator lead wire clamp screws ① and remove the stator bolts with the impact driver.

09900-09003: Impact driver set

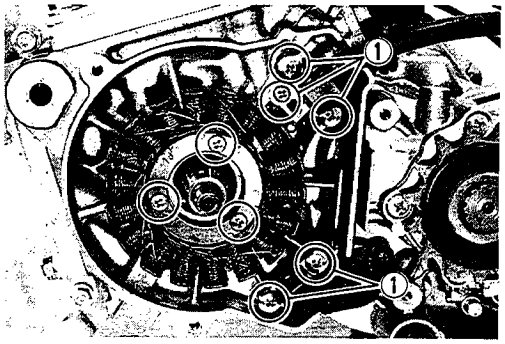

Downloaded from www.Manualslib.com manuals search engine

- Remove the circlip from the drive shaft with a snap ring pliers.

09900-06107: Snap ring pliers

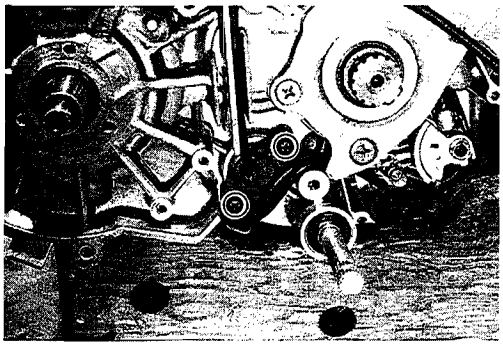

- Remove the oil pump.
- Remove the neutral switch body, O-ring, switch contact and spring.

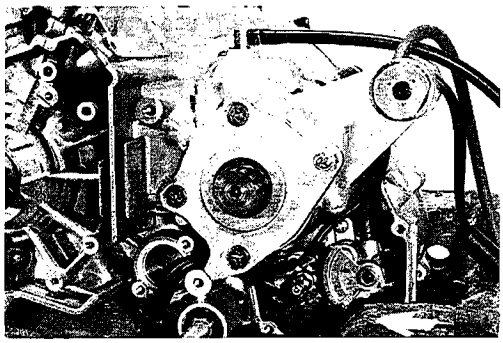

- Remove the intake pipes ① and ②.
- Remove the reed valve.

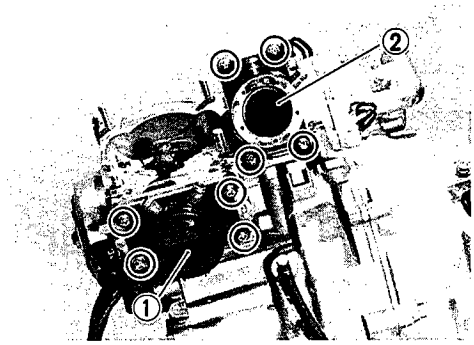

- Remove the water pump case.

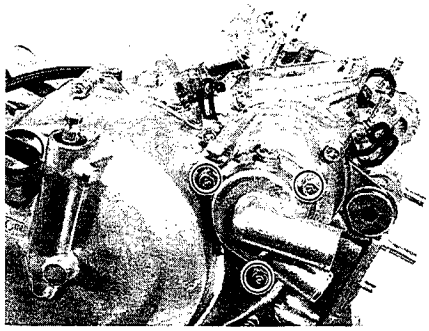

- Remove the impeller.

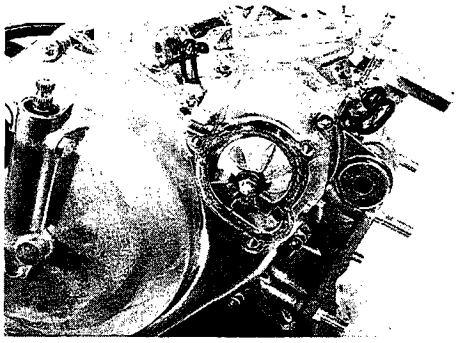

Downloaded from www.Manualslib.com manuals search engine

- Remove the clutch cover and gasket.

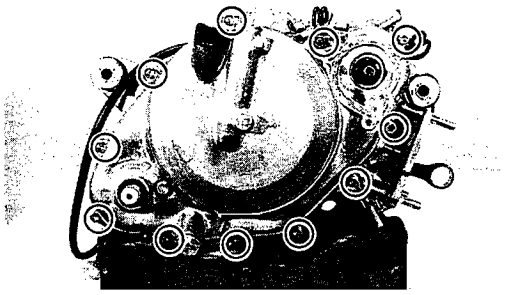

- Remove the water pump driven gear circlip ①.
- Remove the wave washer ②.
- Remove the water pump driven gear ③.
- Remove the pin and washer.

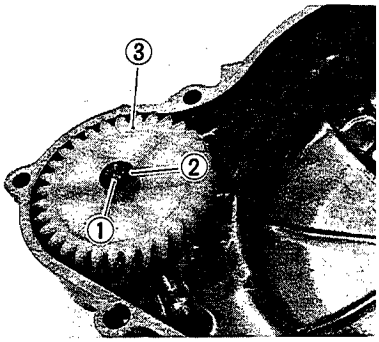

- Remove the water pump shaft ④.

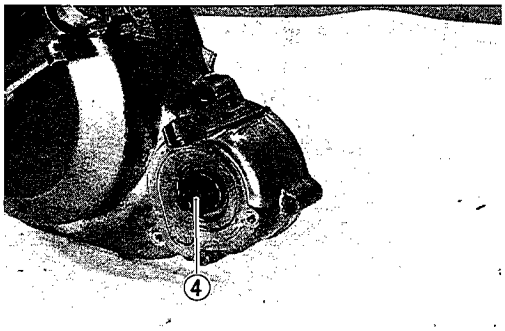

- Remove the water pump shaft oil seal ⑤.

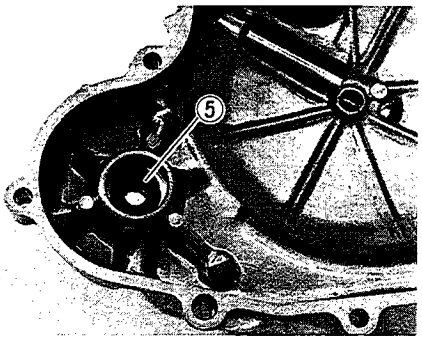

- Remove the mechanical seal.

09925-98220: Bearing installer

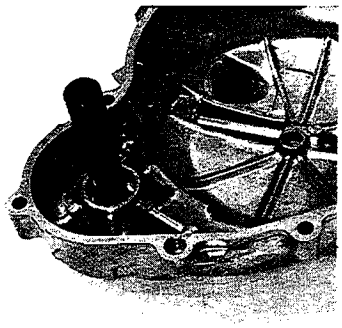

Downloaded from www.Manualslib.com manuals search engine

- Remove the clutch springs and pressure plate with clutch release rack.

09910-20115: Conrod holder

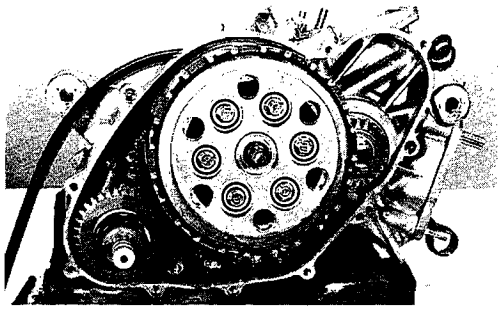

- Flatten the clutch sleeve hub nut lock washer with a chisel.
- Hold the clutch sleeve hub securely with a clutch sleeve hub holder and loosen the hub nut with a socket wrench.

09920-53710: Clutch sleeve hub holder

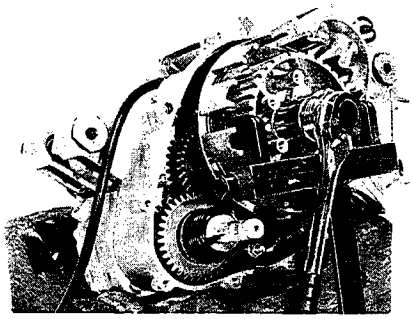

- Remove the clutch sleeve hub, thrust washer and primary driven gear.

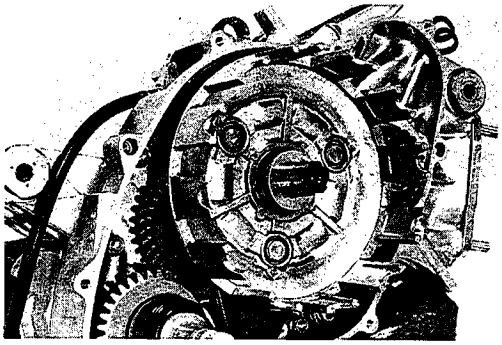

- Remove the clutch sleeve hub assembly and disassemble the following parts:
  Ring ①, Driven plate No. 2 ②, Wave washer ③ and seat ④.

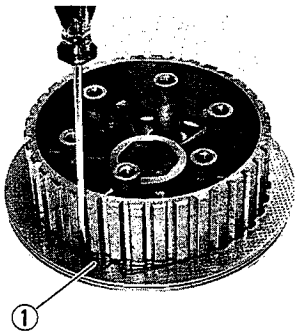

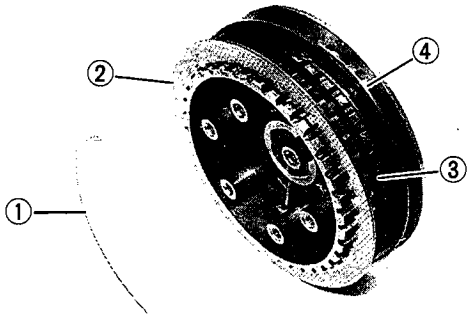

Downloaded from www.Manualslib.com manuals search engine

- Remove the kick spring stopper nut ①.
- Remove the spring hook.
- Remove the spring guide.
- Remove the spring.
- Remove the kick gear.
- Remove the kick shaft.

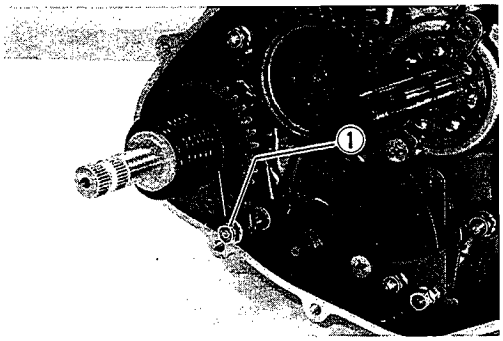

- Remove the gearshift shaft.

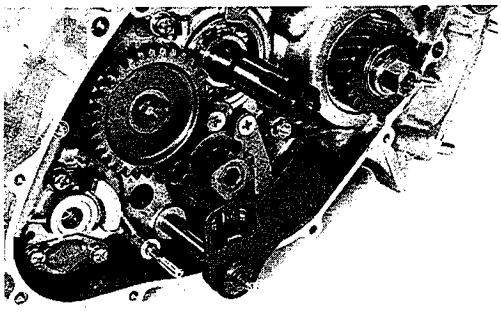

- Remove the circlip with the special tool and detach the flat washer or wave washer, whichever is fitted. Then, draw out the kick starter idle gear and washer.

09900-06107: Snap ring pliers

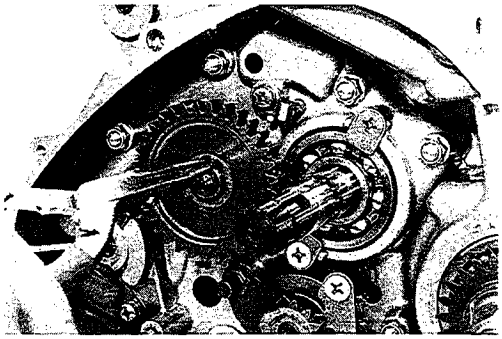

- Remove the pawl lifter ①, cam guide ②, cam stopper ③ and driven gear ④.

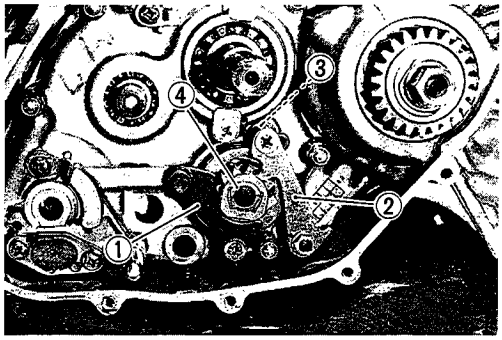

- Remove the transmission oil guide.
- Flatten the lock washers and loosen the bolt and nuts of the transmission gearcase.

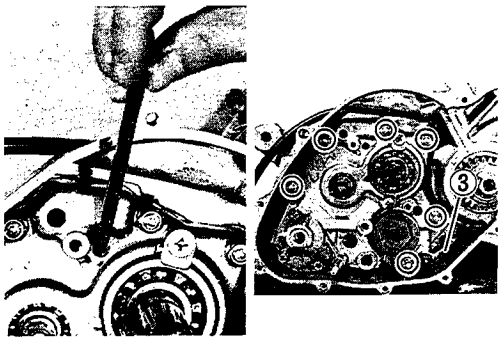

Downloaded from www.Manualslib.com manuals search engine

- Remove the oil pump driven gear ①.
- Pull out the gearshift fork shafts ② and ③, and remove the gearshift fork shafts ④ and ⑤.
- Pull out the gearshift cam shaft ⑥.
- Remove the countershaft ⑦ and drive shaft ⑧.
- Disassemble the gears following the instructions below.

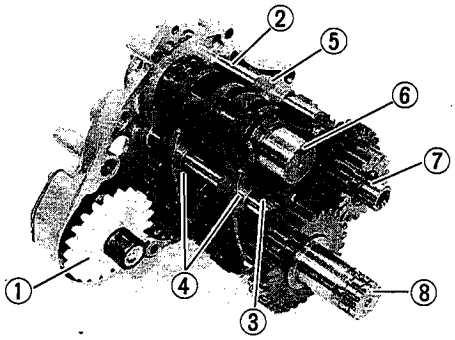

- Countershaft gears: To disassemble the 2nd drive gear, the ring Ⓑ should be removed after the circlip Ⓐ.

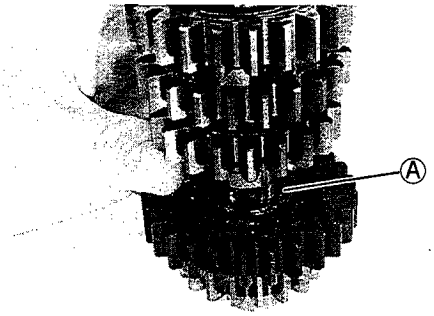

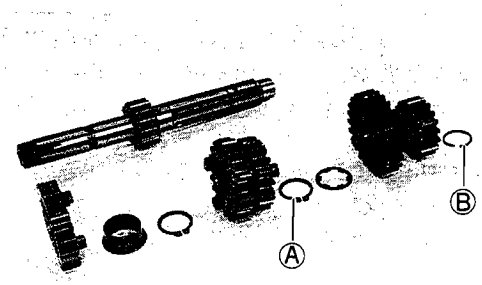

- Remove the oil pump strainer Ⓒ.

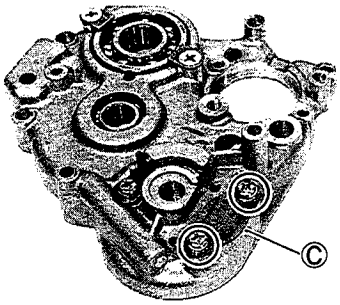

- Remove the trochoid oil pump cover Ⓓ.
- Pull off the pump shaft Ⓔ and pin Ⓕ.

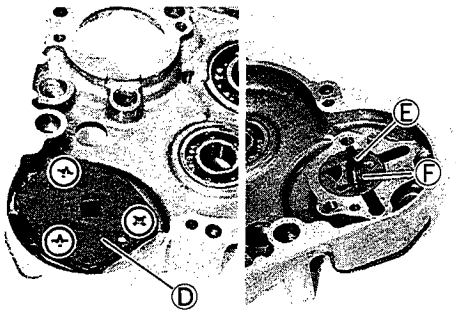

Downloaded from www.Manualslib.com manuals search engine

- Remove the drive shaft bearing retainer ①.

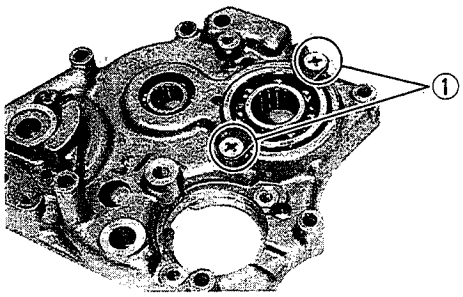

- Carefully force out the drive shaft bearing with the special tool.

09943-88211: Bearing installer

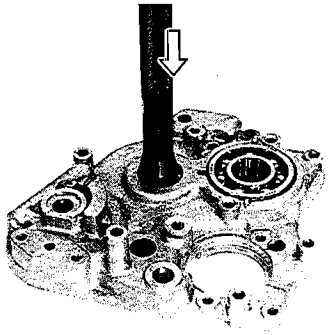

- Remove the countershaft bearing in the same manner as drive shaft bearing.

09913-80112: Bearing installer

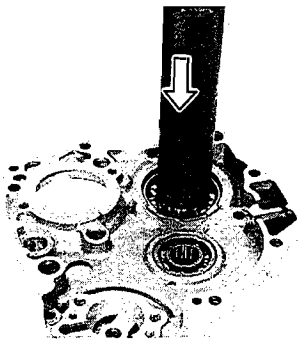

- Flatten the lock washer and remove the primary drive gear nut with the special tool.

09910-20116: Conrod holder

- Remove the primary drive gear and washer.

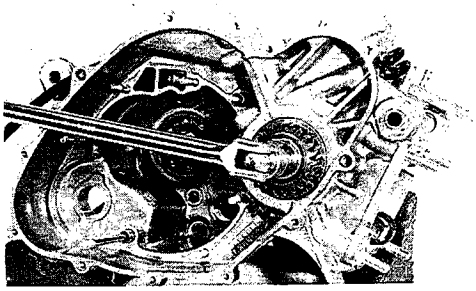

- Loosen the crankcase bolts.

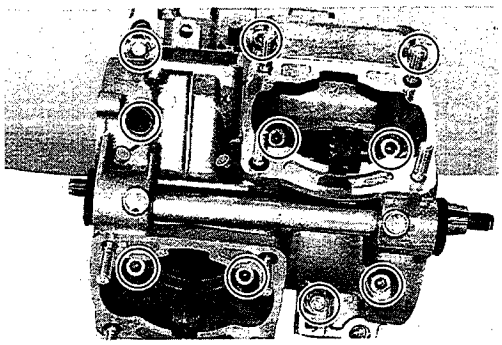

Downloaded from www.Manualslib.com manuals search engine

NOTE:
When loosening the bolts, proceed with smaller diameter bolts first. Also, loosen them evenly little by little in a diagonal fashion.

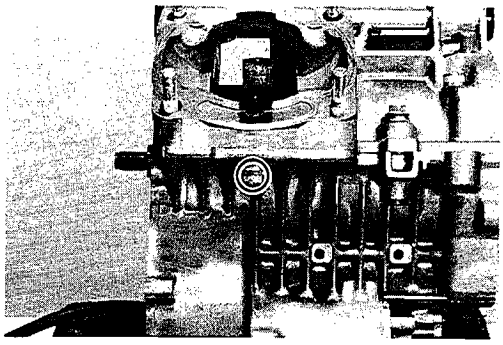

- Separate the crankcase halves evenly at front and at rear.

09912-34510: Cylinder disassembling tool

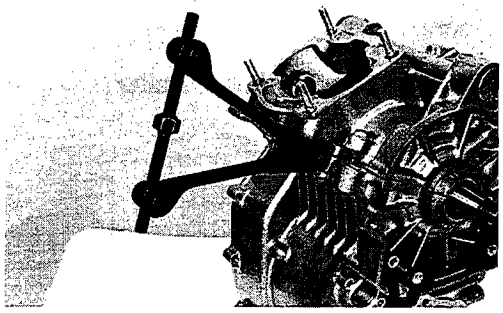

- Remove the crankshaft Ⓐ from the crankcase.

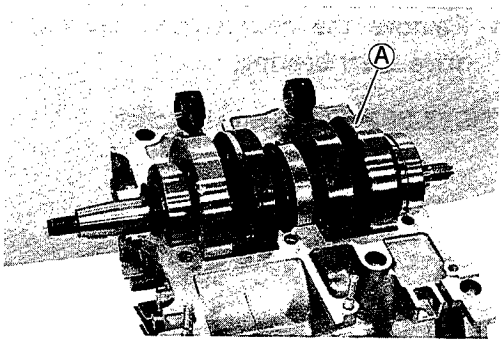

- Remove the countershaft bearing retainer ①.
- Remove the oil seal ② from the retainer.
- Carefully force out the drive shaft left bearing ③.
- Remove the countershaft left bearing ④ by slightly heating the crankcase.

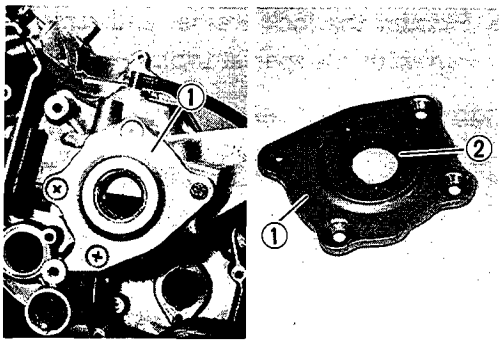

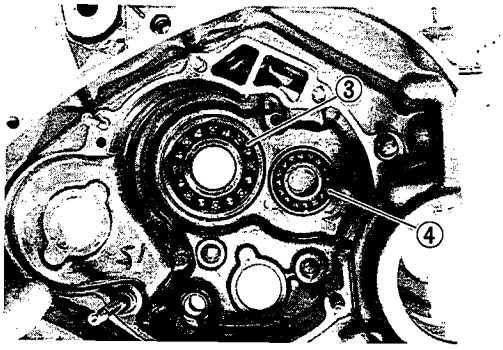

Downloaded from www.Manualslib.com manuals search engine

ENGINE COMPONENTS INSPECTION AND SERVICING

CYLINDER HEAD

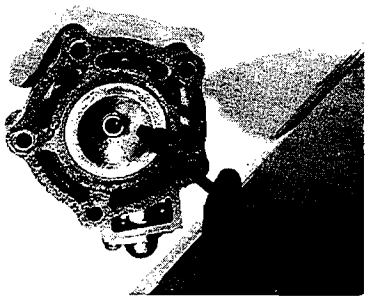

Remove the carbon and clean the cylinder head.
Check for scratches on the mating surface.
Check the gasketed surface of the cylinder head for distortion with a straightedge and thickness gauge, taking a clearance reading at several places indicated. If the largest reading at any position of the straightedge exceeds the limit, replace the cylinder head.

09900-20803: Thickness gauge

Service Limit: 0.1 mm

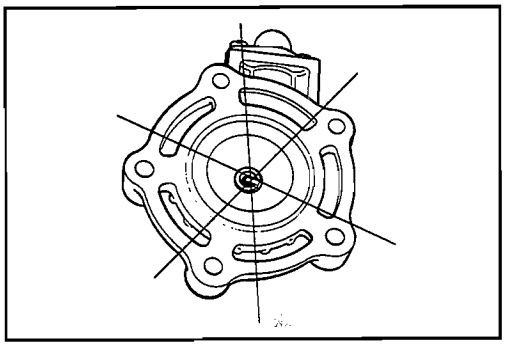

If the largest reading at any portion of the straightedge exceeds the limit, rework the surface by rubbing it against emery paper (of about # 400) laid flat on the surface plate in a lapping manner.
The gasketed surface must be smooth and perfectly flat in order to secure a tight joint. A leaky joint can be the cause of reduced power output and increased fuel consumption.

CYLINDER AND EXHAUST VALVE

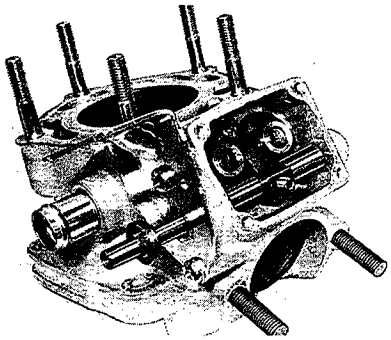

Move the exhaust valve by hand and check that the exhaust valve slides smoothly.
Remove the exhaust valves from the respective cylinders.
Decarbon the exhaust port, exhaust valves and the upper part of the cylinder, taking care not to damage the cylinder wall surface.
Inspect the exhaust valve and cylinder sliding surface for nicks, scratches, wear or other damage.

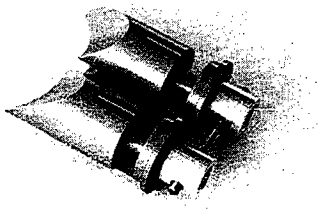

Downloaded from www.Manualslib.com manuals search engine

CYLINDER BORE

Inspect the cylinder wall for nicks, scratches or other damage.

PISTON

DECARBON

De-carbon the crown of the piston and piston ring grooves. After cleaning the grooves, fit the rings and rotate them in their respective grooves to be sure that they move smoothly.
Carbon in groove is liable to cause the piston ring to get stuck in the groove, and this condition will lead to reduced engine power output.
A piston whose sliding surface is badly grooved or scuffed due to overheating must be replaced.

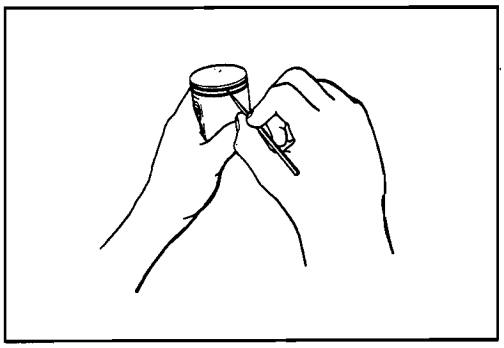

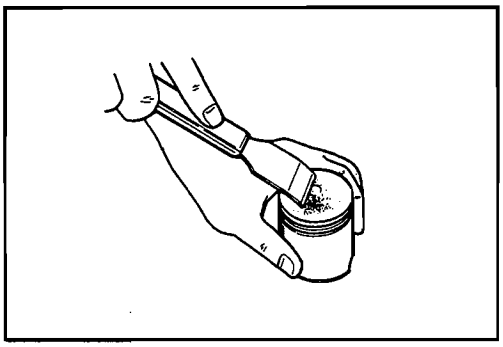

- Shallow grooves or minor scuff can be removed by grinding with emery paper of about # 400.

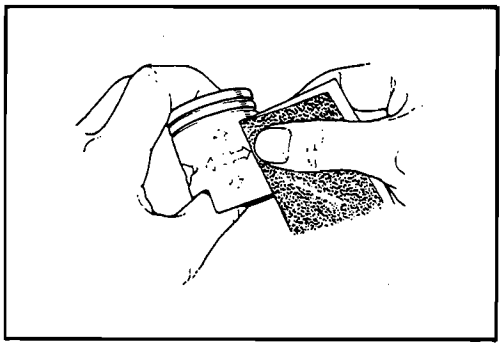

PISTON DIAMETER

Using a micrometer, measure the piston outside diameter at the place 19 mm (0.7480 in) from the skirt end as shown in the illustration.
If the measurement is less than the limit, replace the piston with a new one.

09900-20203: Micrometer (50 – 75 mm)

Service Limit: 55.815 mm (2.1974 in)

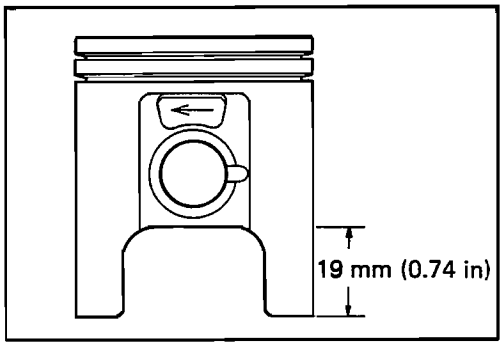

Downloaded from www.Manualslib.com manuals search engine

PISTON-CYLINDER CLEARANCE

As a result of the above measurement, if the piston to cylinder clearance exceeds the limit shown in the table below.

Service Limit: 0.120 mm (0.0047 in)

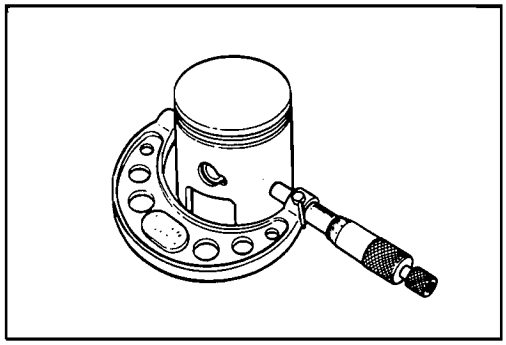

PISTON PIN BORE

Using a caliper gauge, measure the piston pin bore inside diameter.

If reading exceeds the following service limit, replace it with a new one.

Service Limit: 16.036 mm (0.6313 in)

09900-20605: Dial calipers

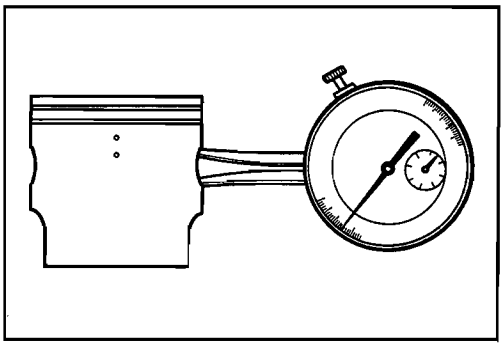

PISTON PIN O.D.

Using a micrometer, measure the piston pin outside diameter at three positions.

09900-20205: Micrometer (0 – 25 mm)

Service Limit: 15.980 mm (0.6291 in)

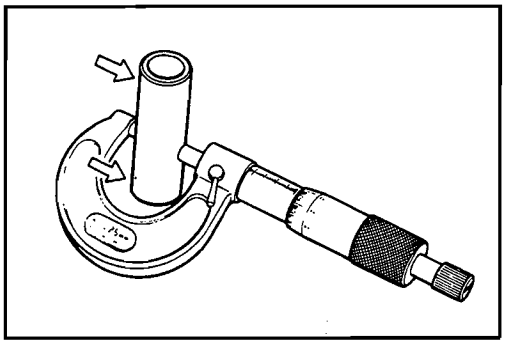

PISTON RINGS

PISTON RING END GAP

Check each ring for end gap, reading the gap with a thickness gauge as shown in the illustration. If the end gap is found to exceed the limit, indicated below, replace it with a new one.

The end gap of each ring is to be measured with the ring fitted squarely into the cylinder bore and held at the least worn part near the cylinder bottom, as shown in the illustration.

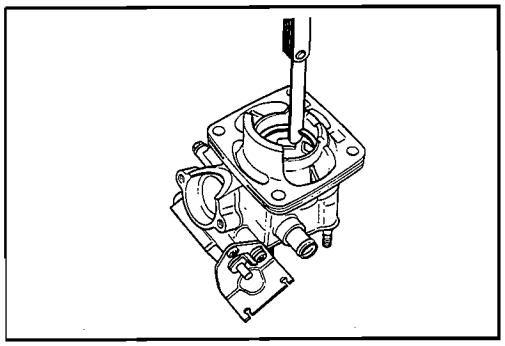

09900-20803: Thickness gauge

Service Limit: 0.80 mm (0.0314 in)

Downloaded from www.Manualslib.com manuals search engine

PISTON RING FREE END GAP

As the piston ring wears, its end gap increases reducing engine power output because of the resultant blowby through the enlarged gap. Here lies the importance of using piston rings with end gaps within the limit.
Measure the piston ring free end gap to check the spring tension.

Service Limit (Top & 2nd rings): 4.0 mm (0.16 in)

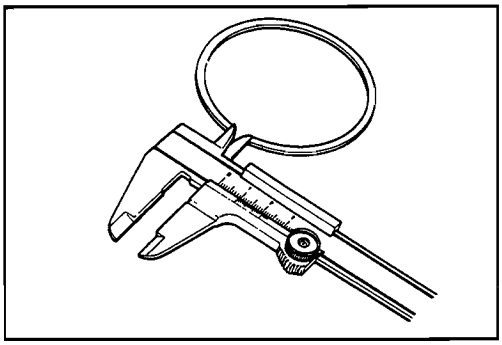

PISTON RING TO GROOVE CLEARANCE

Fix the piston ring in the piston ring groove, measure the ring side clearance with the thickness gauge while matching the sliding surface of piston and ring.

Standard clearance
1st : 0.02 – 0.06 mm (0.0008 – 0.0024 in)
2nd: 0.02 – 0.06 mm (0.0008 – 0.0024 in)

NOTE:
1st ring and 2nd ring differ in the shape. Be sure to bring the "T"-marked side to top when fitting them to the piston.

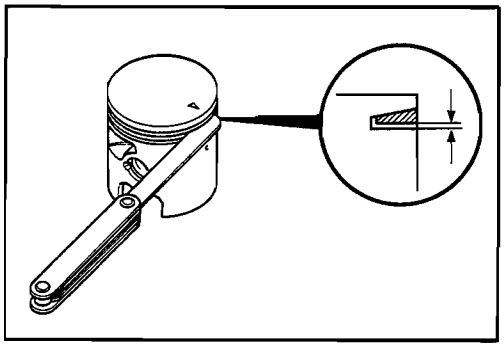

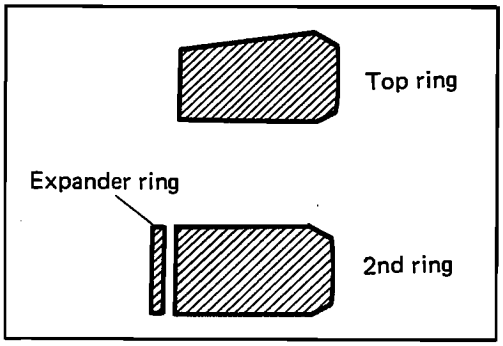

BEARINGS

Wash the bearing with cleaning solvent and lubricate with motor oil before inspecting.
Turn the inner race and check to see that the inner race turns smoothly.
If it does not turn lightly, quietly and smoothly, or if noise is heard, the bearing is defective and must be replaced with a new one.

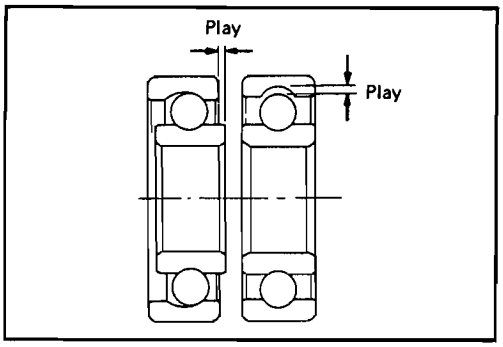

OIL SEALS

Damage to the lip ① of the oil seal may result in leakage of the fuel-air mixture or oil. Inspect for damage and be sure to replace damaged oil seals with new ones.

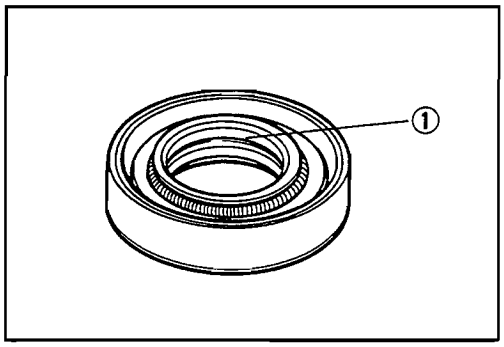

Downloaded from www.Manualslib.com manuals search engine

CRANKSHAFT

CRANKSHAFT RUNOUT

Support crankshaft by "V" blocks ①, with the dial gauge ② rigged to read the runout as shown.

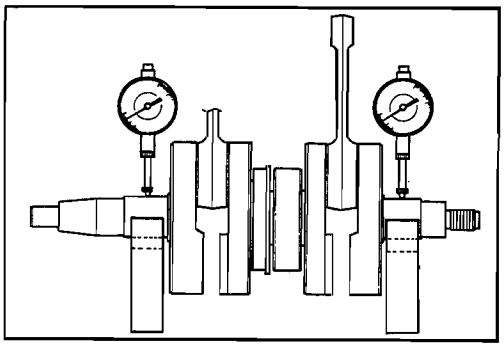

Service Limit: 0.05 mm (0.0019 in)

Excessive crankshaft runout is often responsible for abnormal engine vibration. Such vibration shortens engine life.

09900-21304: V-block

09900-20701: Magnetic stand

09900-20606: Dial gauge (1/100 mm)

CONDITION OF BIG END BEARING

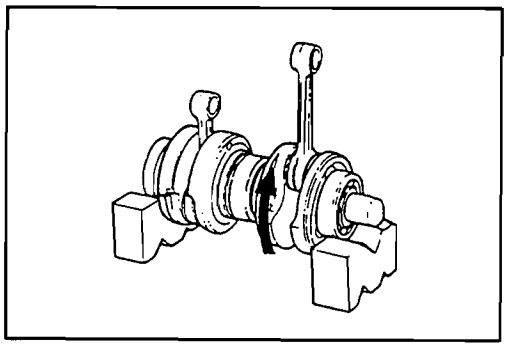

Turn the crankshaft with the conrod to feel the smoothness of rotary motion in the big end. Move the rod up and down while holding the crankshaft rigidly to be sure that there is no rattle in the big end.

Wear on the bid eng of the conrod can be estimated by checking the movement of the small end of the rod. This method can also check the extent of wear on the parts of the conrod's big end.

If wear exceeds the limit, conrod, crank pin and crank pin bearing should all be replaced.

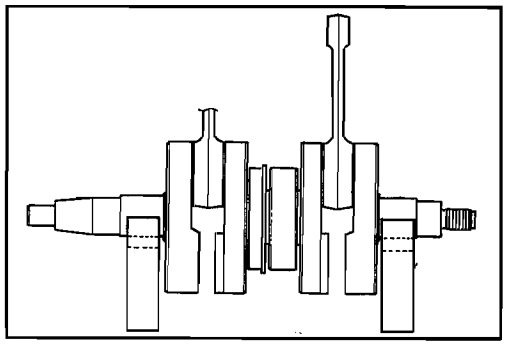

Service Limit: 3.0 mm (0.11 in)

CONROD SMALL END BORE I.D.

Using a caliper gauge, measure the conrod small end diameter.

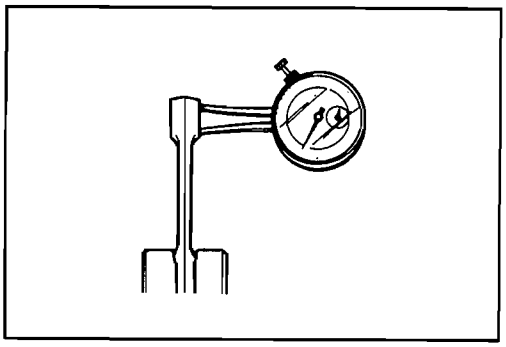

Service Limit: 20.0 mm (0.79 in)

09900-20605: Dial calipers

CLUTCH PLATES

Clutch plates in service remain in oily condition as they were lubricated with oil. Because of this condition, both drive and driven plates are subject to little wearing action and therefore last much longer. Their life depends largely on the quality of oil used in the clutch and also on the way the clutch is operated.

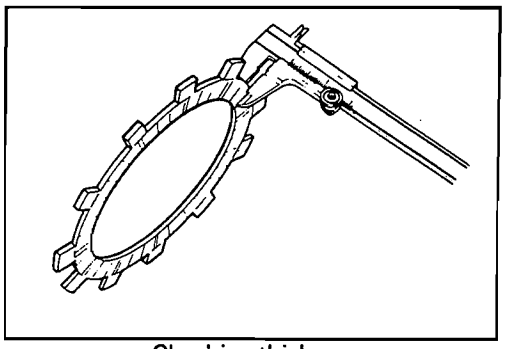

Checking thickness

Downloaded from www.Manualslib.com manuals search engine

These plates are expendable: they are meant to be replaced when found worn down or distorted to the respective limit: use a caliper to check thickness and a thickness gauge and surface plate to check distortion.

09900-20102: Vernier calipers

09900-20803: Thickness gauge

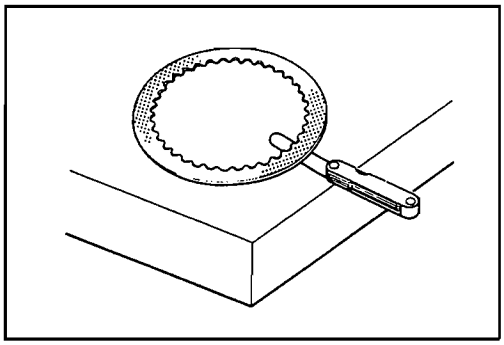

Checking distortion

Unit: mm (in)

Service Limit	Drive plate	Driven plate
Thickness	2.35 (0.09)	–
Distortion	–	0.1 (0.004)
Claw width	15.3 (0.60)	–

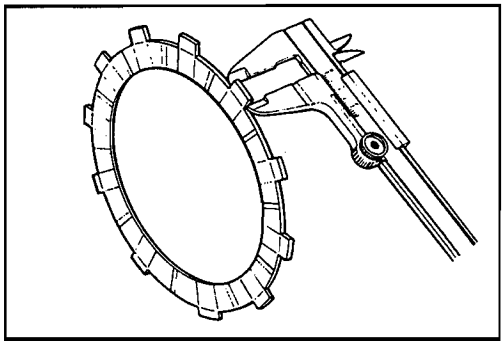

Checking claw width

CLUTCH SPRING FREE LENGTH

Measure the free length of each coil spring with vernier calipers, and compare the elastic strength of each with the specified limit. Replace all the springs if any spring is not within the limit.

Clutch spring free length
Service Limit: 34.77 mm (1.368 in)

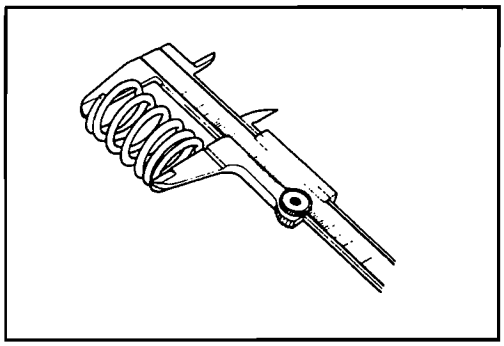

CLUTCH BEARINGS

Inspect clutch bearing for any abnormality, particularly cracks, upon removal from the clutch, to decide whether it can be reused or should be replaced.
Smooth engagement and disengagement of the clutch depends much on the condition of this bearing.

NOTE:
Thrust washer is located between the pressure plate and thrust bearing.

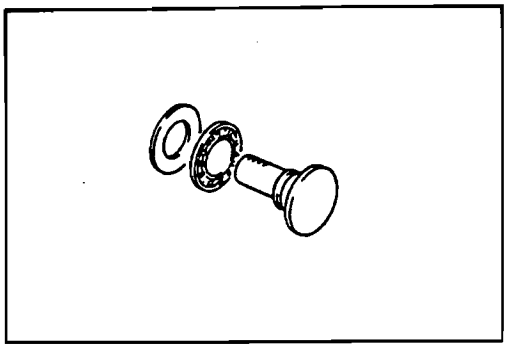

GEARSHIFT FORK CLEARANCE

Using a thickness gauge, check the shifting fork clearance in the groove of its gear.
This clearance for each of the three shifting forks plays an important role in the smoothness and positiveness of shifting action. Each fork has its prongs fitted into the annular groove provided in its gear. In operation, there is sliding contact between fork and gear and, when a shifting action is initiated, the fork pushes the gear axially. Too much a clearance is, therefore, liable to cause the meshed gears to slip apart.

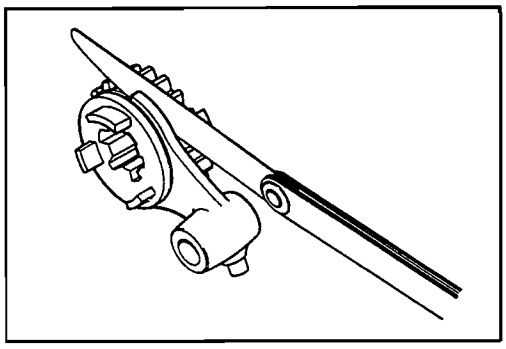

Downloaded from www.Manualslib.com manuals search engine

If the clearance checked is noted to exceed the limit specified, replace the fork or its gear, or both.

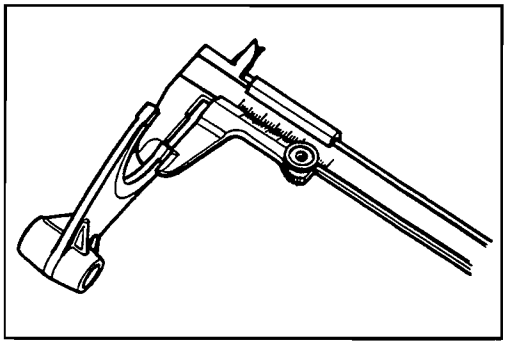

09900-20803: Thickness gauge

Shift fork–groove clearance
Service Limit: 0.5 mm (0.0196 in)

Shift fork groove width

Standard	No. 1 & No. 2	4.0 – 4.1 mm (0.157 – 0.161 in)
	No. 3	5.5 – 5.6 mm (0.216 – 0.220 in)

Shift fork thickness

Standard	No. 1 & No. 2	3.8 – 3.9 mm (0.149 – 0.153 in)
	No. 3	5.3 – 5.4 mm (0.208 – 0.212 in)

Downloaded from www.Manualslib.com manuals search engine

ENGINE REASSEMBLY

This engine is reassembled by carrying out the steps of disassembly in the reverse order, but there are a number of steps which demand special descriptions or precautionary measures.

NOTE:
Apply engine oil to each running and sliding part before reassembling.

- Apply a little grease to the oil seal lip.

99000-25010: SUZUKI SUPER GREASE "A"

- Install the drive shaft bearing retainer together with the gasket.
- When tightening the screws, apply SUZUKI BOND No. 1215 to threads of them.

99000-31110: SUZUKI BOND No. 1215

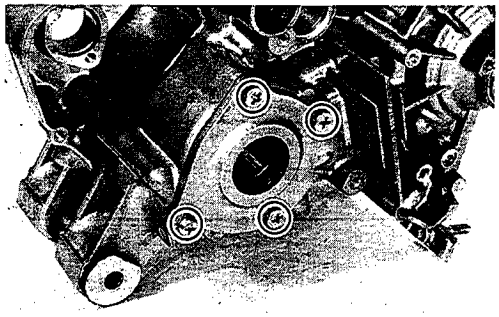

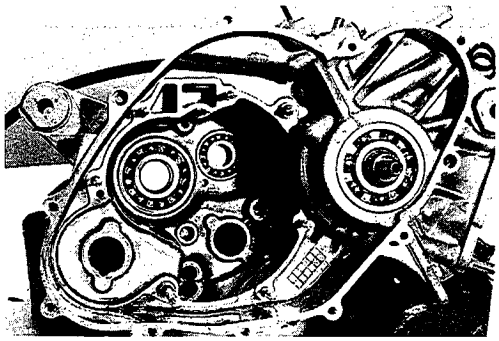

- Position the crankshaft ② in the crankcase lower half ①. This time, position the bearing locating pins Ⓐ, Ⓑ and Ⓒ at the mating face as shown. Also, insert the C-ring ③ into the crankcase groove properly.

CAUTION:
Position the oil seal squarely to the crankshaft.

- Apply oil to the bearings.

NOTE:
Use Suzuki CCI Oil or equivalent. Keep the crankcase mating surface clean, free from oil.

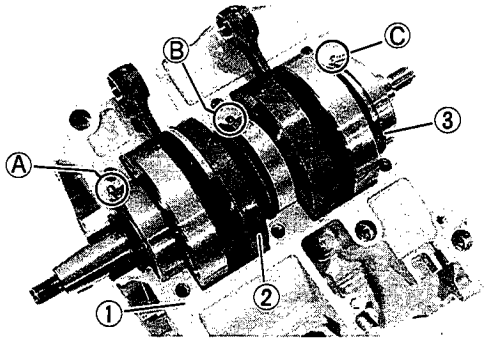

Downloaded from www.Manualslib.com manuals search engine

- Coat the crankcase upper half mating surface ④ with SUZUKI BOND No. 1215.

NOTE:
* *SUZUKI BOND No. 1215 should be coated evenly and continuously.*
* *Care should be taken not to apply SUZUKI BOND No. 1215 so thick as to block the oil passage Ⓐ.*
* *Do not coat SUZUKI BOND No. 1215 in the area shown as Ⓑ.*

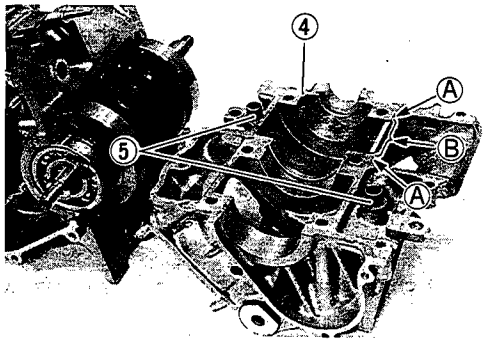

- Press in the dowel pin ⑤ by hand.

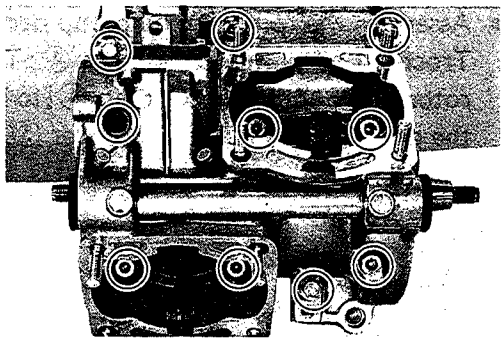

- Position the upper crankcase half properly and tighten the bolts. When tightening, proceed with larger diameter bolts, then smaller bolts. With the same diameter bolts in one group, tighten them evenly in a diagonal fashion.

Crankcase bolt tightening torque	8 mm	Initial tightening	12 – 16 N·m (1.2 – 1.6 kg-m)
		Final tightening	20 – 24 N·m (2.0 – 2.4 kg-m)
	6 mm		0.9 – 1.3 N·m (0.9 – 1.3 kg-m)

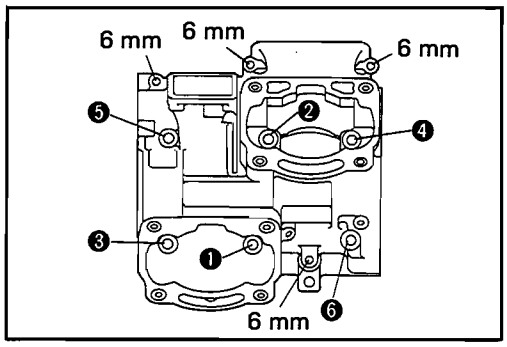

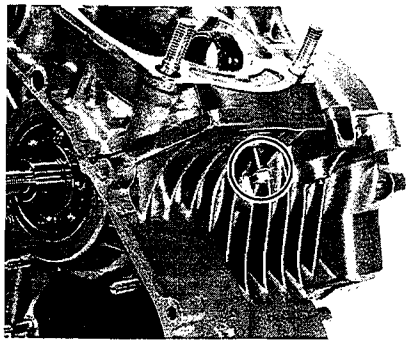

- Assemble the following parts:
  Primary drive gear washer ⑥; Key ⑦; Primary drive gear ⑧; Lock washer ⑨ and Primary drive gear nut ⑩.

Tightening torque: 60 – 80 N·m (6 – 8 kg-m)

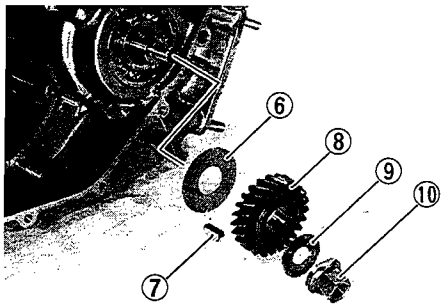

Downloaded from www.Manualslib.com manuals search engine

- Tighten the nut ⑩ with the crankshaft locked with the special tool.

09910-20115: Conrod holder

- Bend the washer ⑨ to prevent the nut from loosening.

NOTE:
Check that the crankshaft rotates smoothly by hand.

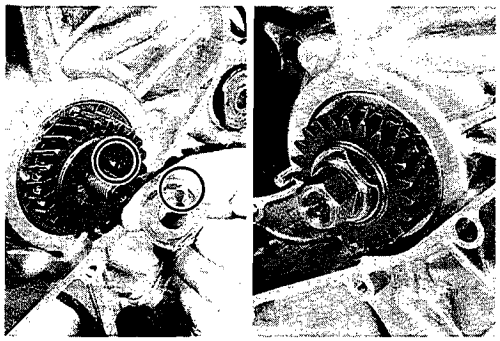

- Assemble the following oil pump parts:
  Trochoid oil pump outer rotor ①; Trochoid oil pump inner rotor ② ; Pump shaft ③ ; Pin ④ [to be installed as shown in the photograph] ; Oil pump cover ⑤ and Oil strainer ⑥.

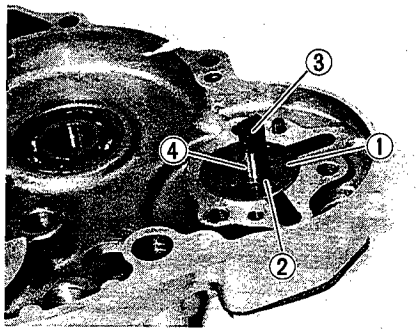

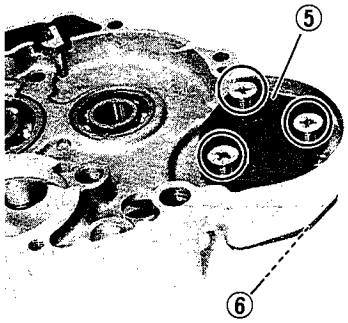

TRANSMISSION GEARS AND RELATED PARTS

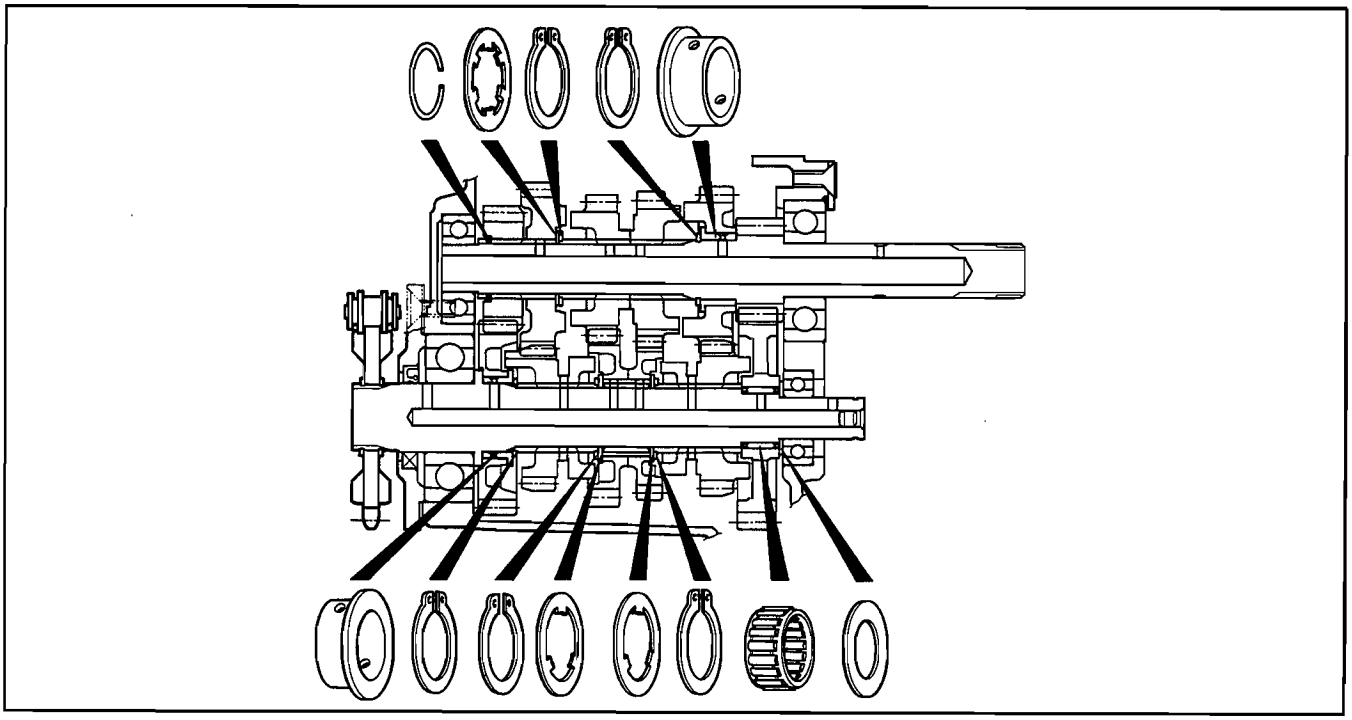

Downloaded from www.Manualslib.com manuals search engine

COUNTERSHAFT

- Assemble the countershaft gears. The circlip Ⓑ locating the 2nd drive gear Ⓐ in position should be fitted before the circlip Ⓒ is fitted in the shaft groove.
- When mounting circlip, pay attention to the direction of the circlip. Fit it to the side where the thrust is as shown in the figure with the rounded side against the gear surface.

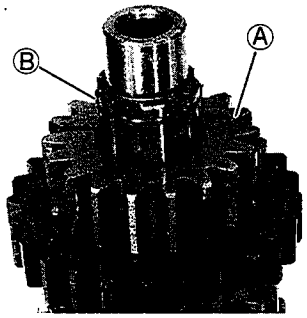

NOTE:
Always use a new circlip.

CAUTION:
Never reuse a circlip after a circlip has been removed from a shaft. A used circlip should be discarded and a new circlip must be installed.
When installing a new circlip, care must be taken not to expand the end gap larger than required to slip the circlip over the shaft.
After installing a circlip, always insure that it is completely seated in its groove and securely fitted.

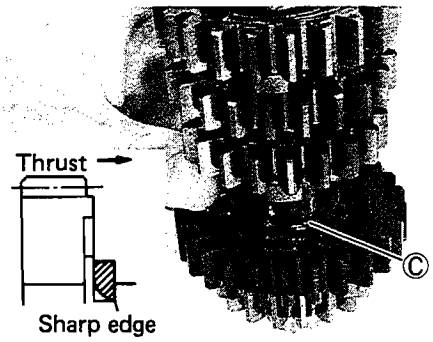

DRIVE SHAFT

- Slide the bushing Ⓓ over the shaft with its oil holes aligned with the drive shaft oil holes.
- Assemble the drive shaft gears, countershaft gears and the following shifter parts on the transmission case:
  Shifting cam shaft ①; Shifting forks ② & ③; Shifting fork ④ and Shifting fork shafts ⑤ & ⑥.

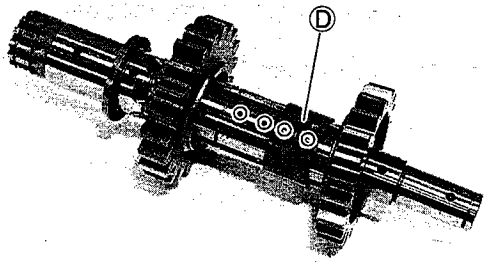

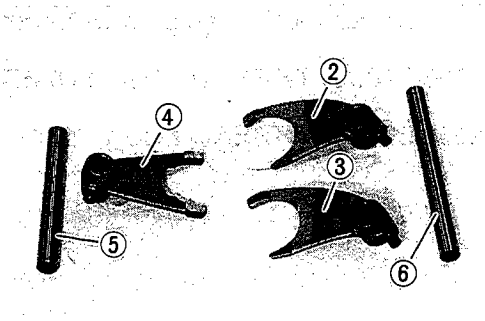

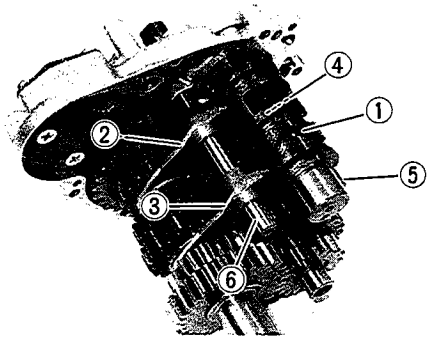

Downloaded from www.Manualslib.com manuals search engine

- Fit the springs ②, pins ③ and pawls ④ on the shifting cam driven gear ①.
- The pawl shape is not symmetrical. Install the wider width side facing the gear as shown.

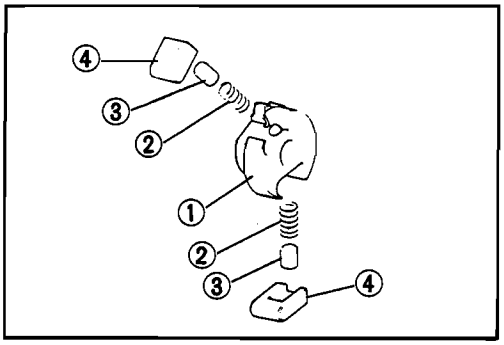

- Insert the counter shaft bearing retainer ⑤ and shifting cam driven gear subassembly into the shifting cam shaft ⑥.

99000-32050: THREAD LOCK "1342"

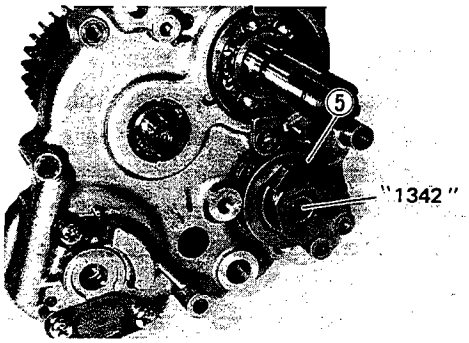

- Install the gearshift pawl lifter ⑥.
- Install the gearshift cam stopper ⑦ and spring ⑧.

Tightening torque: 15 – 23 N·m (1.5 – 2.3 kg-m)

- With the spring hook Ⓐ hitched on the shifting cam guide ⑨, install the guide by first tightening the nut ⑩ lightly and then tighten the screw ⑪.

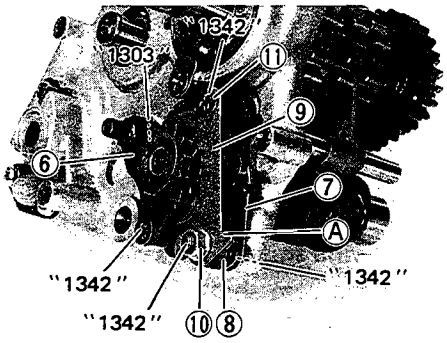

- All threads must be secured with thread lock cement.

99000-32030: THREAD LOCK SUPER "1303"

99000-32050: THREAD LOCK "1342"

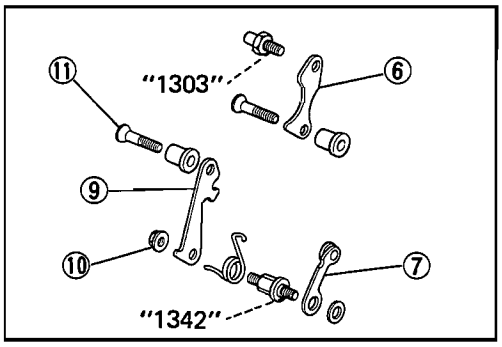

NOTE:
Verify that all gears and shifting parts function smoothly as designed by manually operating the mechanism.

- Install the oil pump gear ⑫.

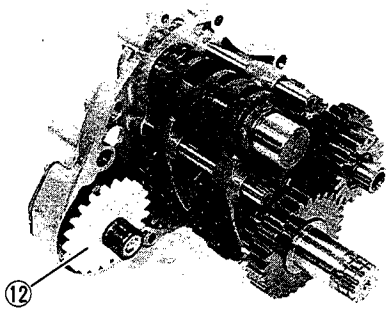

Downloaded from www.Manualslib.com manuals search engine

- Install the transmission subassembly into the crankcse.
- Care must be taken at this time not to cause damage on the oil seal lip by the drive shaft being inserted ⑬.

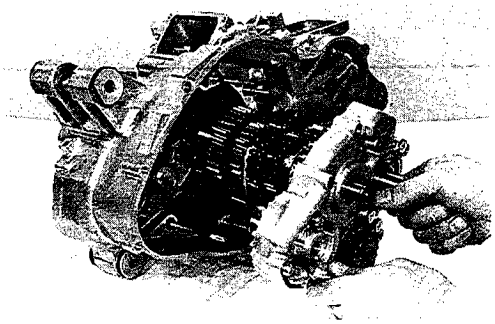

- Insert the oil pump spacer ⑭.
- Apply oil to the spacer.

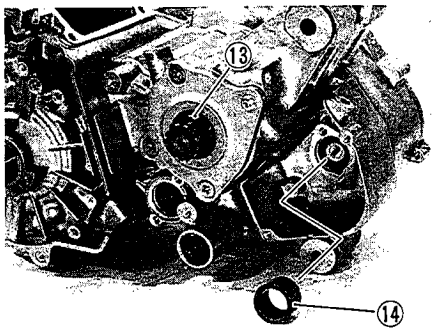

- Tighten all the nuts Ⓐ through Ⓑ except for Ⓒ which is tightened after the kick starter shaft is installed.

Tightening torque: 8 – 12 N·m (0.8 – 1.2 kg-m)

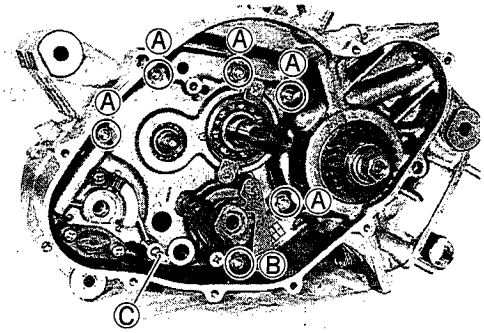

- Insert the oil guide ⑮.
- Install the oil guide stopper ⑯.

NOTE:
When inserting the oil guide, be sure that the open end faces inside.

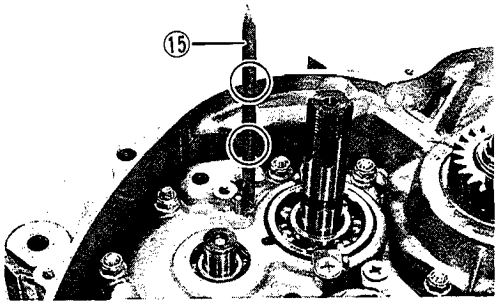

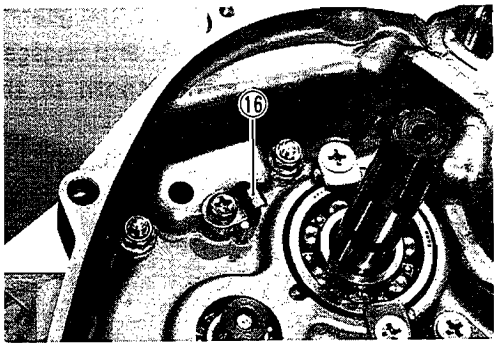

Downloaded from www.Manualslib.com manuals search engine

KICK

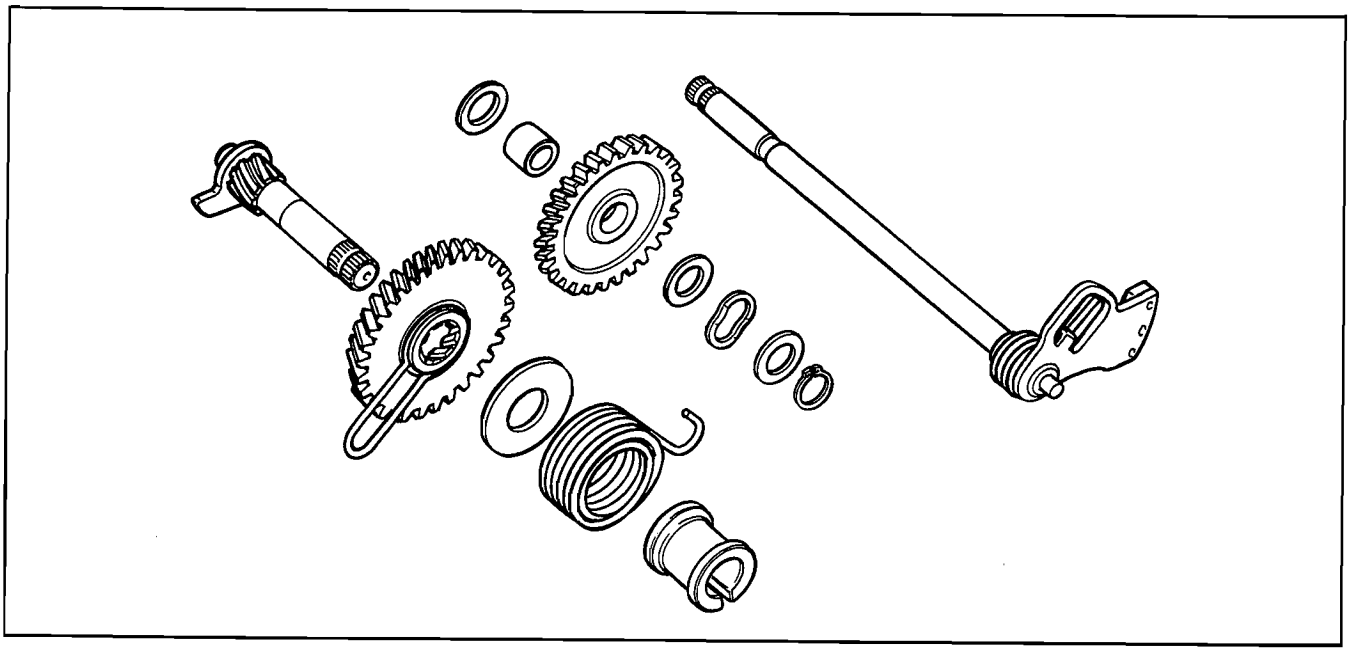

- Install the kick starter idler gear together with washers, bushing, spring washer, washer ① and circlip ② as shown.
- Install the kick starter shaft stopper ③. Thread lock should be applied to the screw threads.

99000-32030: THREAD LOCK SUPER "1303"

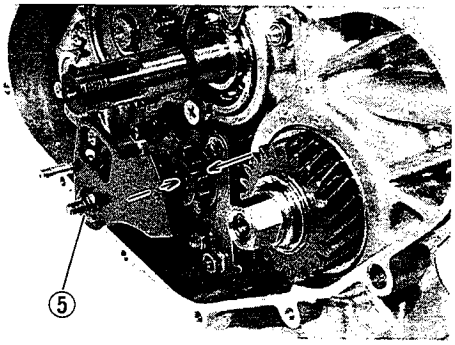

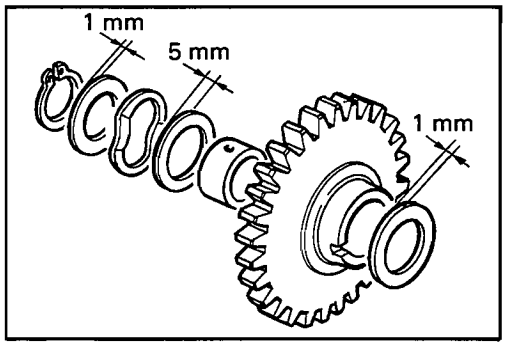

- Fit the return spring ④ on the gearshift shaft ⑤.
- Insert the gearshift shaft and engage its gear with the driven gear so that the center tooth of these two gears mesh as shown.

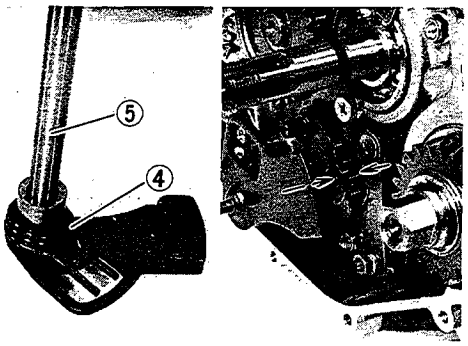

Downloaded from www.Manualslib.com manuals search engine

- Install the following parts:
  Kick starter shaft ⑥ ; Kick starter gear ⑦ ; Washer ⑧ ; Spring ⑨ ; Spring guide ⑩ and Spacer ⑪.
- Fit the kick starter gear spring hook Ⓐ to the spacer ⑪.
- Also fit the kick starter gear spring hook Ⓑ to the spacer ⑪ .
- Tighten the kick starter spring stopper nut ⑫.

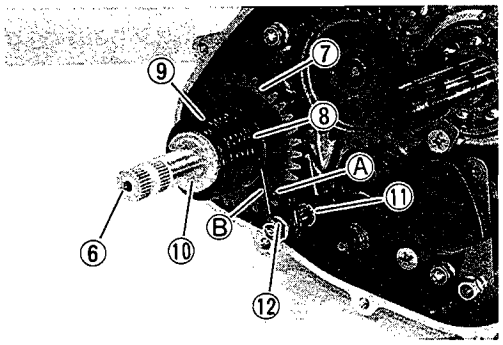

CLUTCH

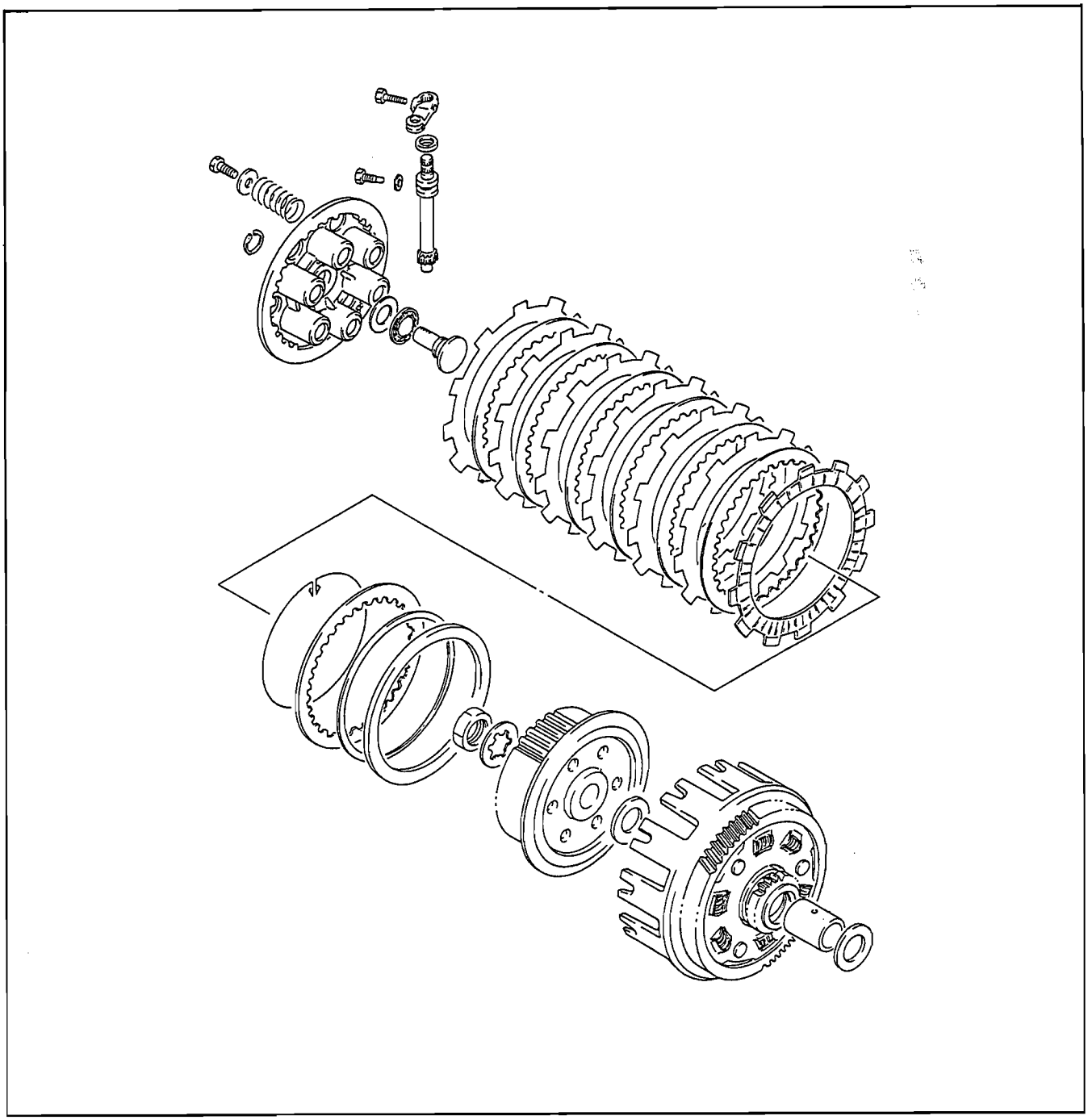

Downloaded from www.Manualslib.com manuals search engine

- Install the following clutch housing parts:
  Washer ①; Clutch housing ②; Spacer ③ and Washer ④.

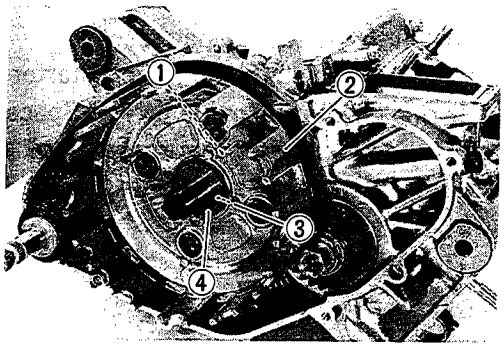

- Prepare the clutch sleeve hub subassembly ⑤ using the following parts:
  Wave washer seat ⑥; Wave washer ⑦; Clutch driven plate No. 2 ⑧ and Ring ⑨.

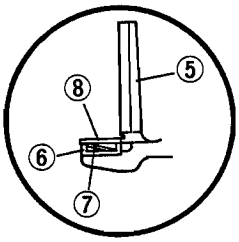

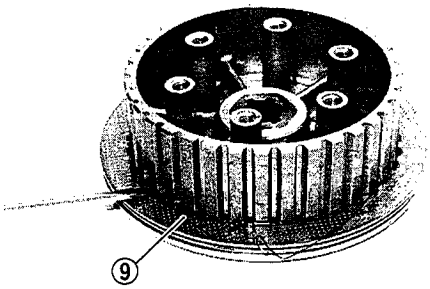

- Install the clutch sleeve hub subassembly ⑤ using lock washer ⑩ and nut ⑪.

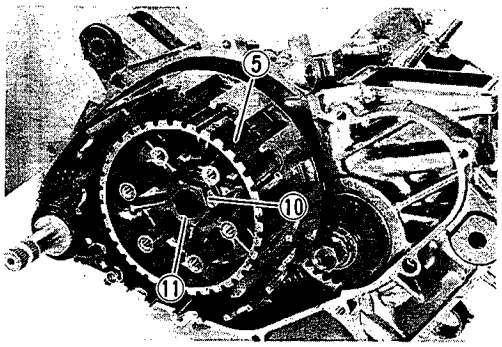

- When tightening the nut ⑪, lock the sleeve hub rotation with special tool.

Tightening torque: 40 – 60 N·m (4.0 – 6.0 kg-m)

09920-53710: Clutch sleeve hub holder

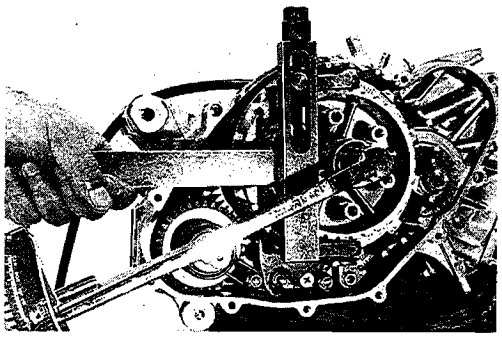

- Bend the washer to prevent the nut from loosening.
- Install the clutch drive plate ⑫ and driven plate ⑬ alternately in the clutch housing. Oil all the plates.

- Prepare the pressure plate subassembly ⑭ using the following parts:
  Washer ⑮; Bearing ⑯; Release rack ⑰ and circlip ⑱.

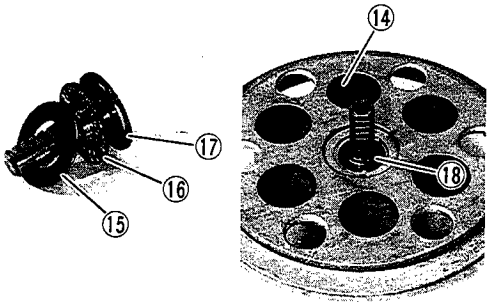

Downloaded from www.Manualslib.com manuals search engine

- Position the pressure plate subassembly ⑭ and springs ⑲, and tighten the bolts to specification.

Tightening torque: 8 – 12 N·m (0.8 – 1.2 kg-m)

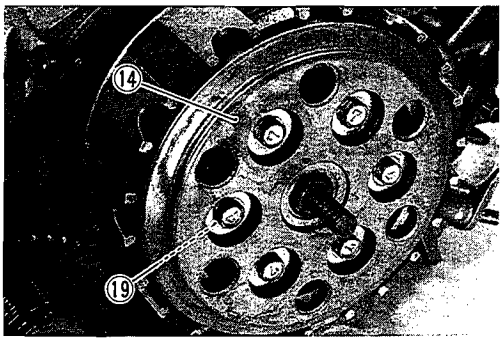

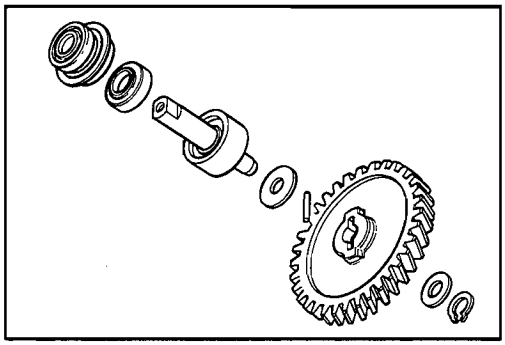

- Apply SUZUKI BOND No. 1215 to the water pump mechanical seal housing ① and press in the clutch cover with the special tool.

99000-31110: SUZUKI BOND No. 1215

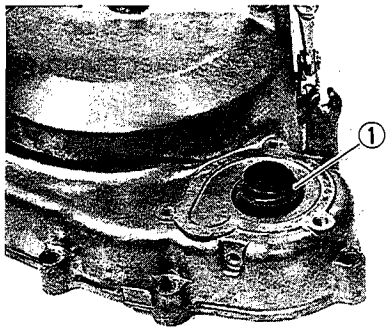

09913-80112: Bearing installer

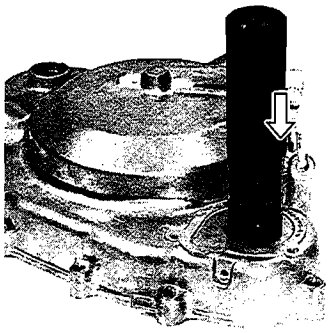

- Install the oil seal ②.

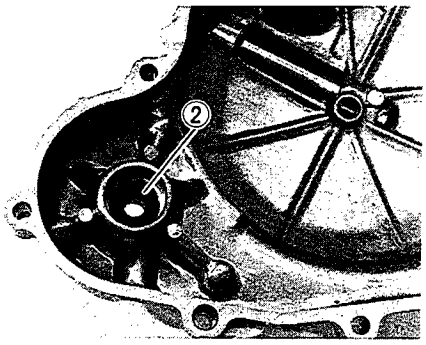

Downloaded from www.Manualslib.com manuals search engine

- Insert the water pump shaft assembly ③.
- At this time, use care not to bend the oil seal lip.

09925-98220: Bearing installer

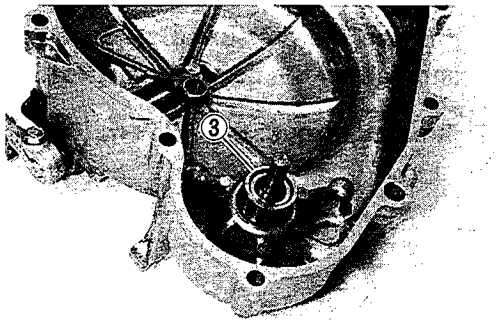

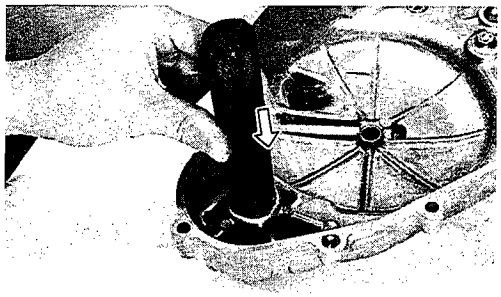

- Assemble the following parts on the pump shaft: Washer ④ ; Pin ⑤ ; Water pump gear ⑥ ; Spring washer ⑦ and Circlip ⑧.

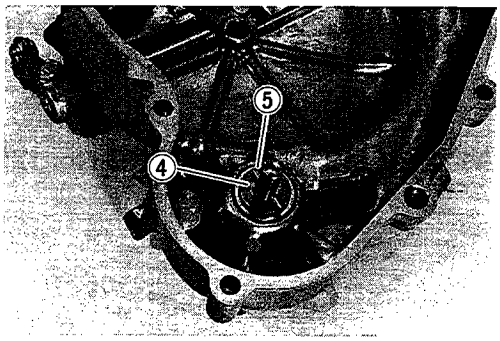

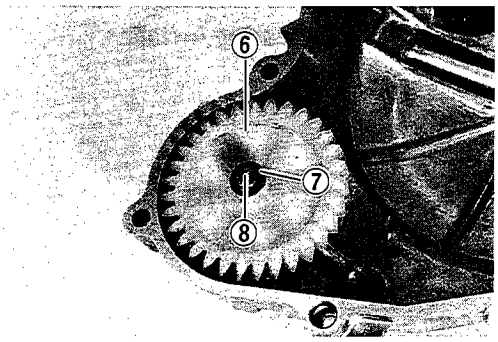

- Insert the clutch release pinion ⑨ into the clutch cover and tighten the stopper bolt ⑩.

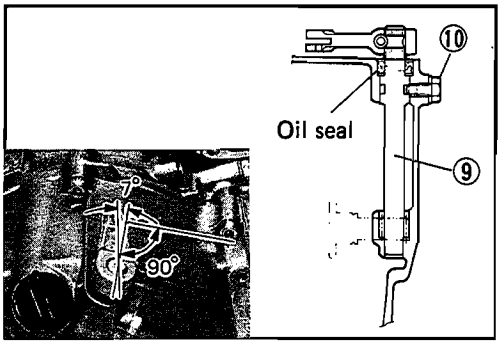

Downloaded from www.Manualslib.com manuals search engine

- Apply SUZUKI BOND No. 1215 to the crankcase mating surface at the areas Ⓐ, each 20 – 30 mm in length.

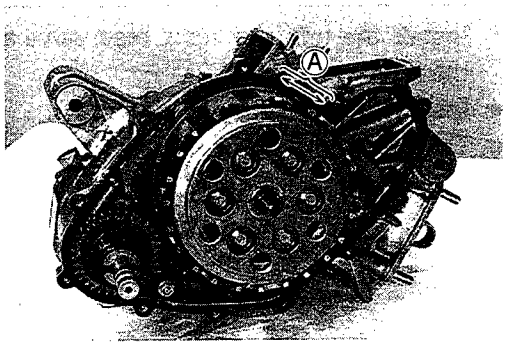

NOTE:

* *Position the clutch release rack so that the teeth face the release pinion when assembled.*
* *Fit the clutch cover subassembly to the crankcase so that the water pump gear and clutch release rack engage properly with the respective gears on crankcase side.*

Tightening torque: 6 – 10 N·m (0.6 – 1.0 kg-m)

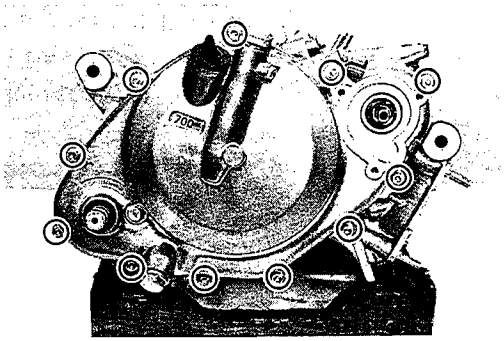

- Position the impeller ⑪ on the shaft.
- When installing the seal, make sure that the painted mark faces inside. Also, apply soapsuds for initial lubrication.
- Using the bolt, wave washer ⑫ and gasket ⑬, tighten the impeller.

Tightening torque: 7 – 9 N·m (0.7 – 0.9 kg-m)

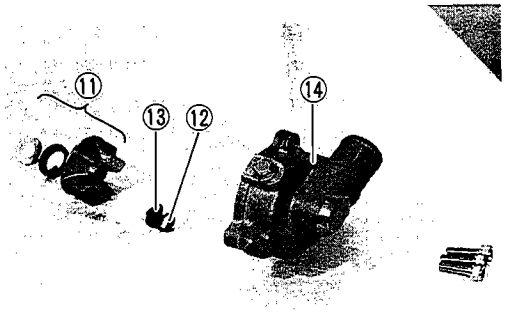

- The gasket should be positioned with its sealing face contacting the impeller.

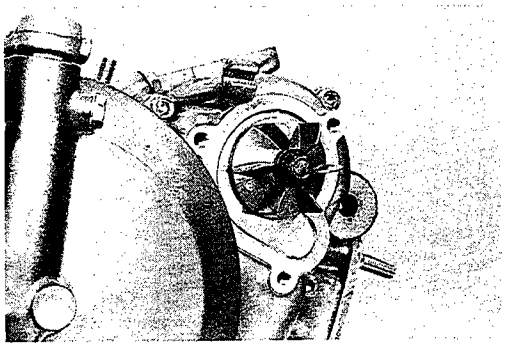

- Install the water pump case ⑭.

Tightening torque: 6 – 10 N·m (0.6 – 1.0 kg-m)

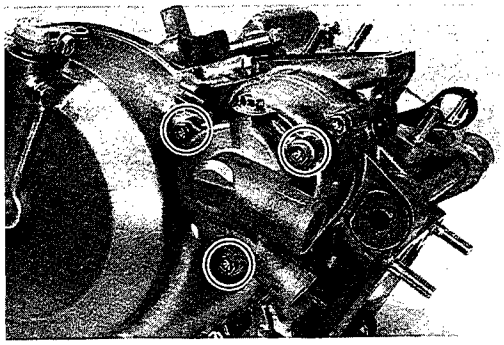

Downloaded from www.Manualslib.com manuals search engine

- Install the left and right reed valve assemblies ① and ② on the crankcase.
- Install the intake pipes ③ and ④.
- The clamp should be installed together with the screw.

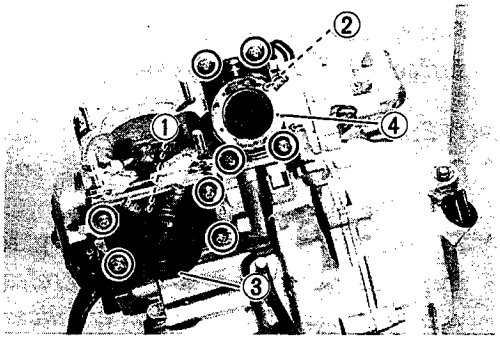

- Assemble the following parts on the case:
  Spring ⑤; Contact piece ⑥; O ring ⑦ and Switch body ⑧.
- After the switch body is tightened, route the lead wire through the clearance.
- Secure the lead wire with the clamp located on the intake pipe.

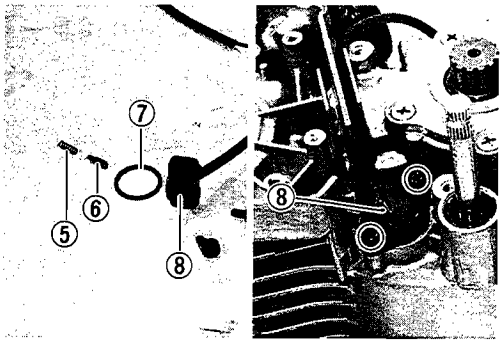

- Install the oil pump ⑨ on the engine.
- Connect the oil hoses ⑩ and ⑪ to cylinders as shown.
- Secure the hose with clamp at the connection.
- Connect the oil hoses ⑫ and ⑬ to crankcase as shown.

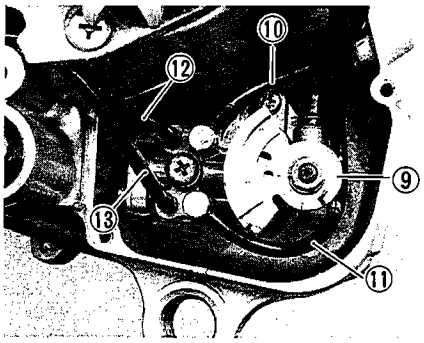

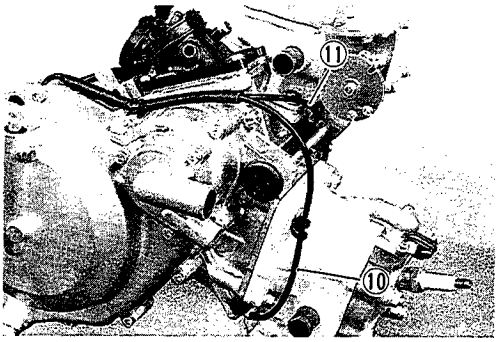

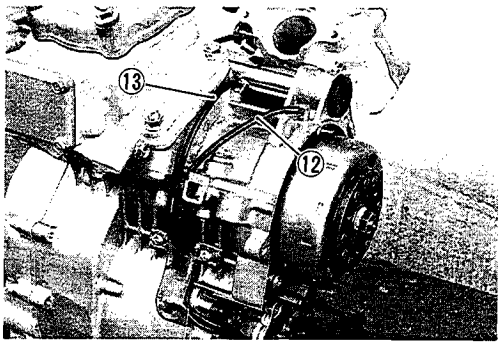

- Fit the circlip ⑭ on the drive shaft.
- Mount the sprocket ⑮.
- Secure the sprocket with the circlip ⑯.

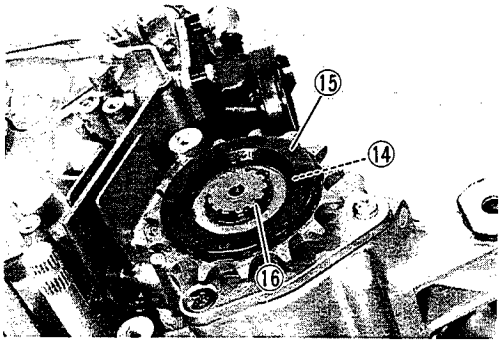

Downloaded from www.Manualslib.com manuals search engine

- Mount the stator ① and the signal generators ②.
- Install the lead wire guide and screw ③.
- Apply THREAD LOCK "1342" to the stator screws and tighten them.

99000-32050: THREAD LOCK "1342"

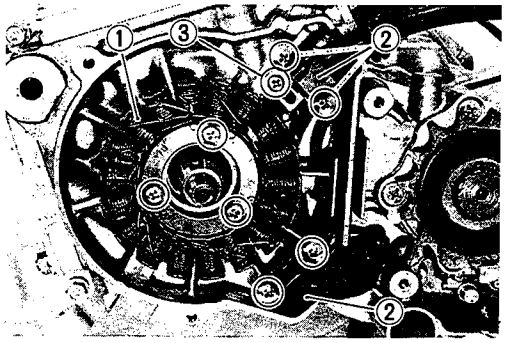

- Degrease the tapered portion of the rotor and also the crankshaft. Use nonflammable cleaning solvent to wipe off the oily matter to make these surfaces completely dry.

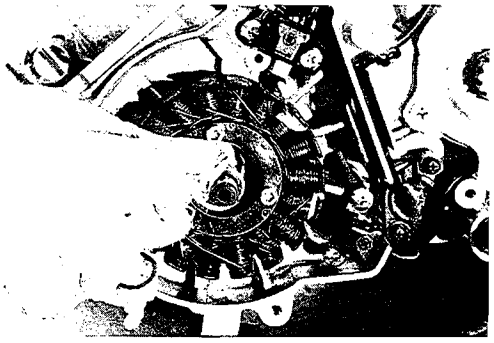

- Apply THREAD LOCK SUPER "1324" to the nut and tighten it to the specified torque with the special too.

99000-32120: THREAD LOCK SUPER "1324"

09930-40113: Rotor holder

Tightening torque: 85 – 105 N·m (8.5 – 10.5 kg-m)

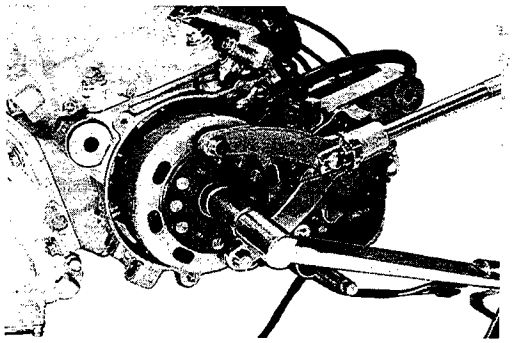

- Mount the piston rings in the order of expander ring, 2nd ring and top ring.

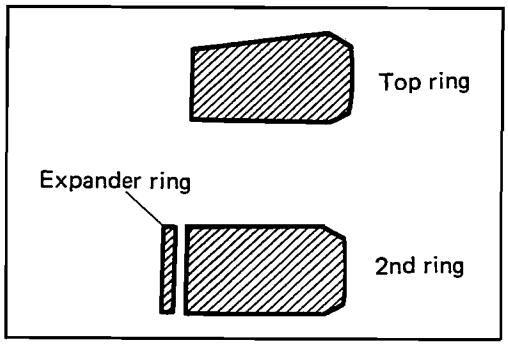

- Top and 2nd rings have letter "T" marked on the side. Be sure to bring the marked side to top when fitting them to the piston.

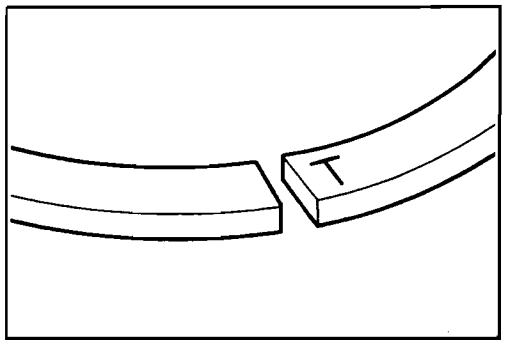

Downloaded from www.Manualslib.com manuals search engine

- Install the bearing ① and two thrust washers ② to the conrod.
- Be sure to install the pistons in the cylinders from which they were taken out in disassembly, refer to the letter mark, "1" and "2", scribed on the piston.
- Apply engine oil to the conrod and crankshaft bearings.

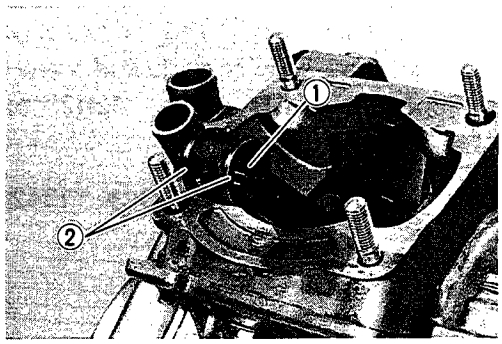

- The arrow mark on the piston crown points to the exhaust port side.

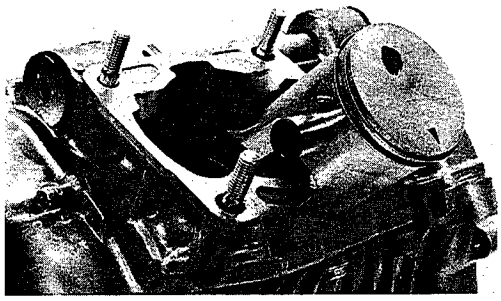

- The circlip should be mounted in such a position that the mating ends of the circlip do not coincide with the groove portion ③ of the piston.
- Before inserting the piston in the cylinder, be sure to apply oil to the outer surface of the piston ring grooves.

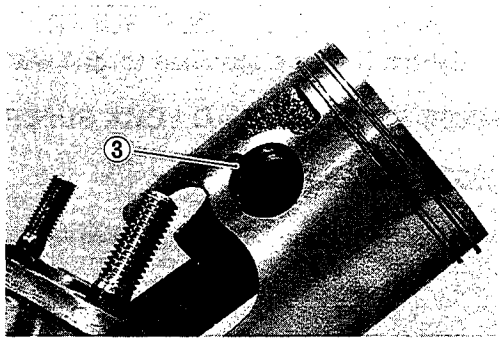

- It is extremely important that, when the piston is fed into the cylinder, each ring in place should be so positioned as to hug the locating pin.
- Install new gaskets and positioning pins properly.

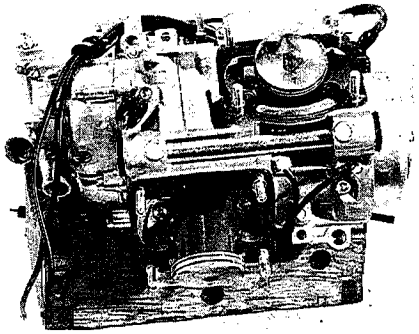

- Press in the oil seal ①. Apply oil to the lip part of oil seal.

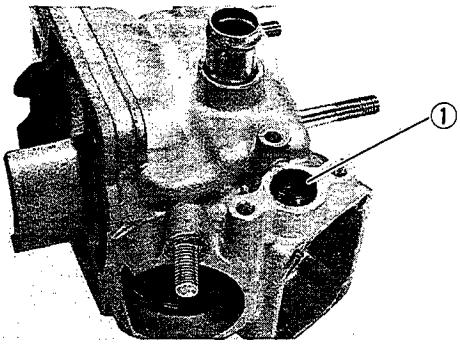

Downloaded from www.Manualslib.com manuals search engine

- Install the oil seal retainer ②.

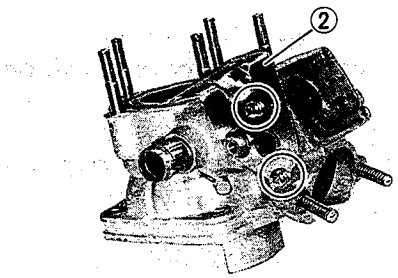

- Assemble the exhaust valve ③ and valve guide ④ properly referring to the markings:
  Mark "17" on valve to match with mark "18" on guide.
  Mark "19" on valve to match with mark "20" on guide.
- Install the spacer ⑤ with its chamfer side facing top.
- Install the valve pin ⑥ with the flange Ⓐ side facing the markings "19" and "20".

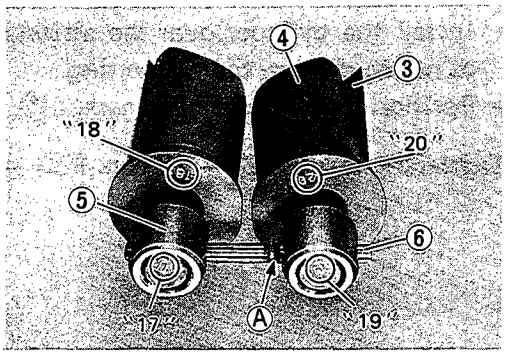

- Insert the exhaust valve assembly into the cylinder.

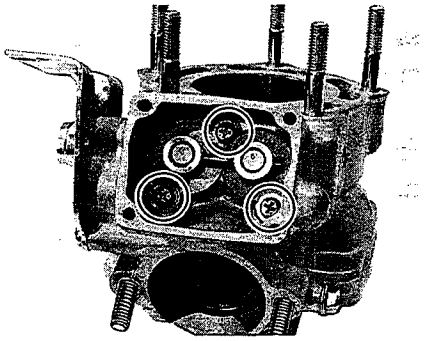

- Assemble the valve shaft ⑧, shaft arm ⑦ and spacer ⑨ on the cylinder.
- Tighten the lock bolt ⑩ on the arm so that the screw point engages with a hole drilled in the shaft. Apply THREAD LOCK "1342" to the lock bolt.

99000-32050: THREAD LOCK "1342"

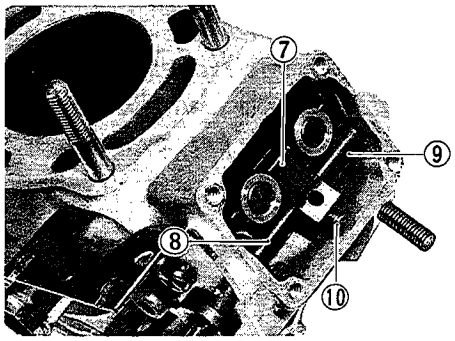

- Install the valve pulley lever ⑪ and washer ⑫.

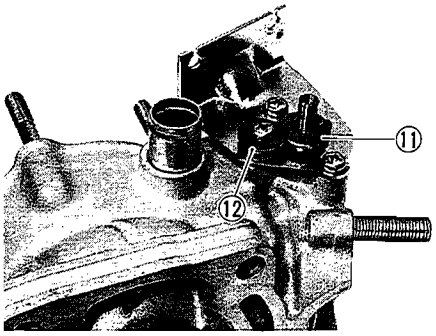

Downloaded from www.Manualslib.com manuals search engine

- Install the cylinder cover.
- Position the cylinder gasket ① on the crankcase.
- Apply oil to the piston and cylinder sliding surfaces.

NOTE:
Make sure that each piston ring end gap position is properly matching the locating pin.

- Push in the cylinder dowel pin ② by hand.

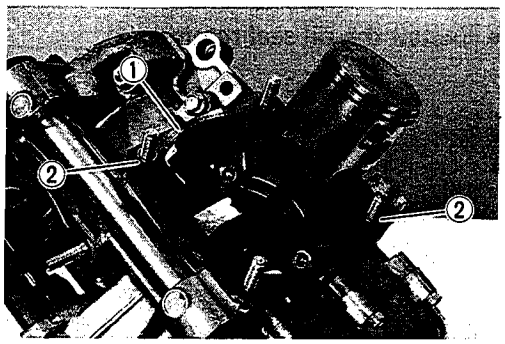

- Install the cylinder over the piston slowly and carefully so as not to damage the piston ring.
- Position the cylinder head gasket ③.

Tightening torque: 23 – 27 N·m (2.3 – 2.7 kg-m)

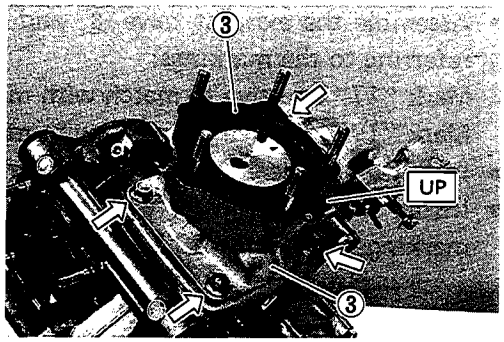

- Install the cylinder head ④. On the two stud bolts out of total five, a copper washer and cap nut ⑤ should be fitted.
- Install the water pipe elbow connector ⑥ together with the clamp ⑦.

Tightening torque: 23 – 27 N·m (2.3 – 2.7 kg-m)

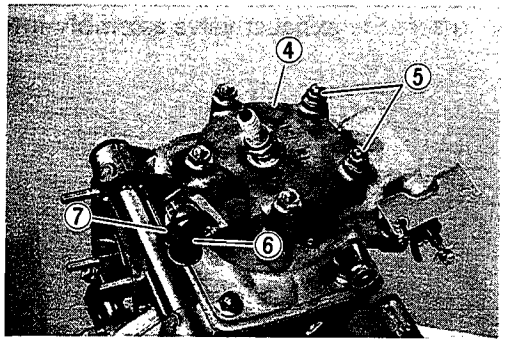

NOTE:
Carry out the same procedures to assemble the Left cylinder parts. Note that the clamp is not needed on the hose elbow connector ⑦ for the Left cylinder.

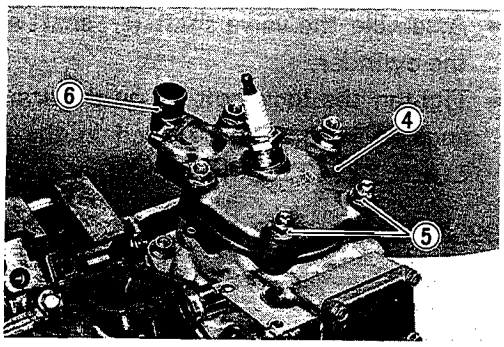

Downloaded from www.Manualslib.com manuals search engine

FUEL AND LUBRICATION SYSTEM

CONTENTS

FUEL TANK AND FUEL COCK 4-1
CARBURETOR 4-2
CONSTRUCTION 4-2
SPECIFICATIONS 4-2
I.D. NO. LOCATION 4-3
REMOVAL AND DISASSEMBLY 4-3
NEEDLE VALVE INSPECTION 4-6
FLOAT HEIGHT ADJUSTMENT 4-6
CARBURETOR IDLE ANGLE ADJUSTMENT 4-7
FUEL LEVEL INSPECTION 4-7
REASSEMBLY AND REMOUNTING 4-7
THROTTLE CABLE ADJUSTMENT 4-8
OIL PUMP 4-9
BLEEDING AIR FROM THE OIL PUMP CIRCUIT 4-9
CHECKING OIL PUMP 4-9

Downloaded from www.Manualslib.com manuals search engine

FUEL TANK AND FUEL COCK

The fuel tank is equipped with a tank cap, fuel cock and fuel filter. The tank cap has an air vent which allows gasoline to flow to the carburetor smoothly. The fuel cock construction is as shown in the illustrations. The fuel cock has three positions, OFF, ON and RES, each of which can be selected by operating the cock lever. With the lever in ON position (normal), the main passage opens. With the lever in RES position, an auxiliary passage opens for supplying reserve fuel. With the lever in OFF position, both of the passages are closed.

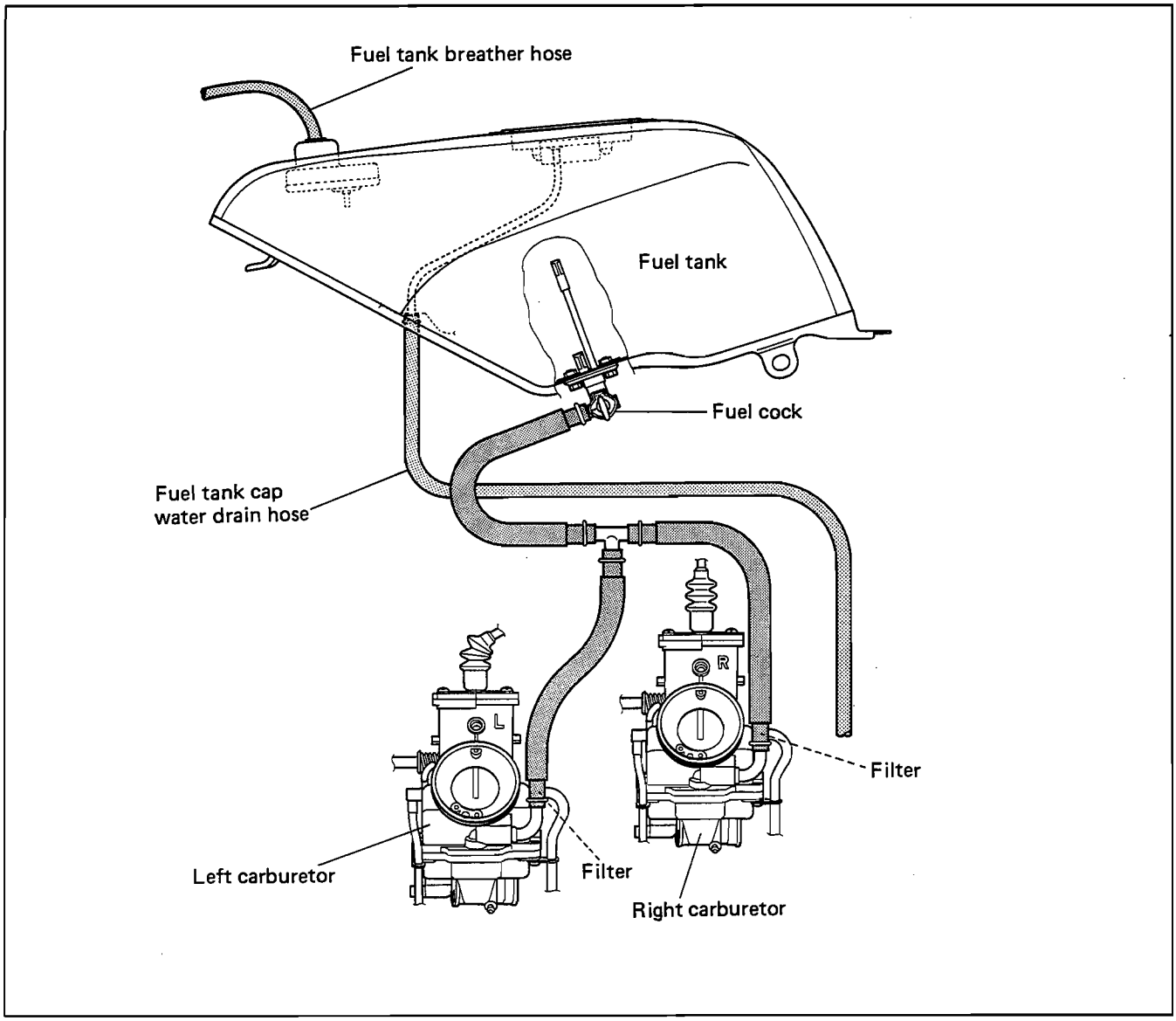

MAINTENANCE

The fuel filter will collect foreign particles, and therefore must be periodically checked and cleaned. The fuel tank should be cleaned at the same time the fuel filter is being cleaned.

INSPECTION

If the fuel leaks from around the fuel cock, gasket may be damaged. Visually inspect the gasket, and replace it if necessary. Examine the air vent in the fuel tank tap to see if it is obstructed. Use compressed air to clean an obstructed vent.

Downloaded from www.Manualslib.com manuals search engine

CARBURETOR
CONSTRUCTION

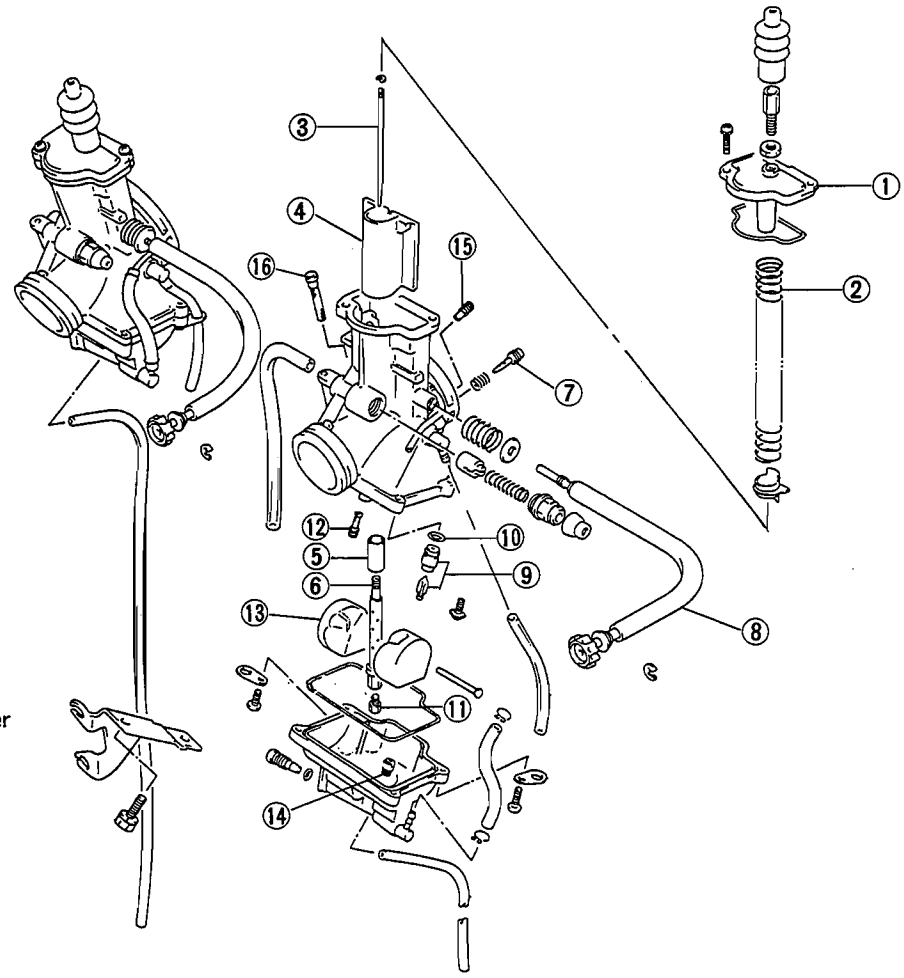

ITEM			SPECIFICATION
Carburetor type			MIKUNI VM32SS
I.D. Number			12C00
Idle r/min			1300 ± 150 r/min
Fuel level			7.1 ± 0.5 mm (0.28 ± 0.02 in)
Float height			8 ± 1.0 mm (0.31 ± 0.04 in)
Main jet		(M.J.)	# 200
Jet Needle		(J.N.)	6FL65-54-4
Needle jet		(N.J.)	O-6
Pilot jet		(P.J.)	# 25
Air screw	(A.S.)	Right	2 turns back
		Left	
Starter jet		(G.S.)	# 50

Downloaded from www.Manualslib.com manuals search engine

I.D. NO. LOCATION

Each carburetor has I.D. Number ① stamped on the carburetor body according to its specifications.

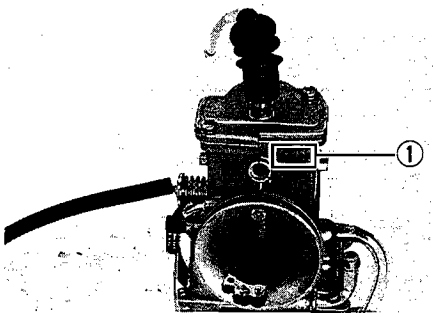

REMOVAL AND DISASSEMBLY

- Remove the lower fairings. (Refer to page 7-1.)
- Remove the fuel tank.
- Remove the air cleaner.

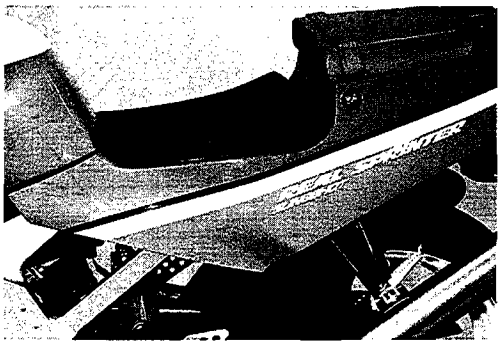

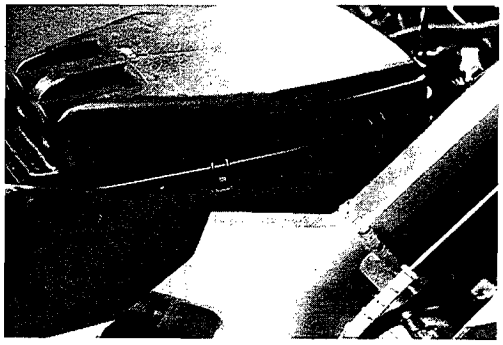

- Remove the screws and junction box cap ①.

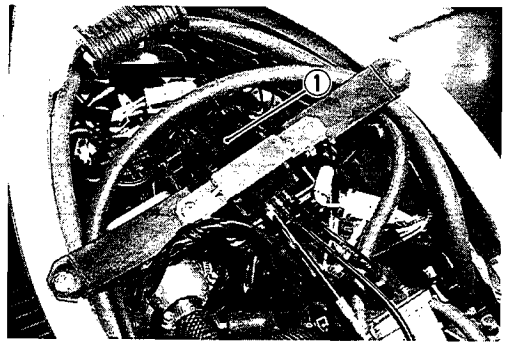

- Remove the throttle cable ② and oil pump cable ③.

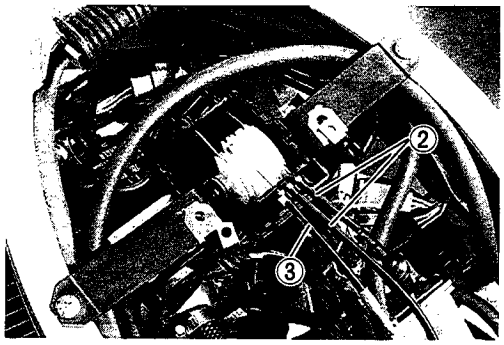

Downloaded from www.Manualslib.com manuals search engine

- Remove the carburetor ①, ② and overflow hoses ③ .

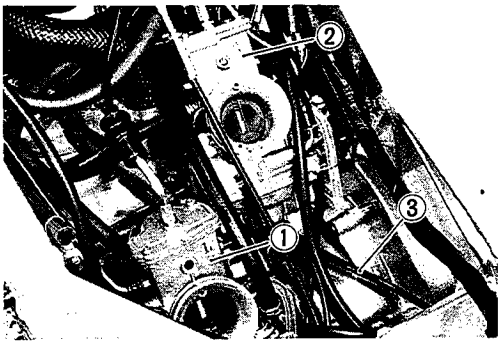

- Remove the starter cable ④ .

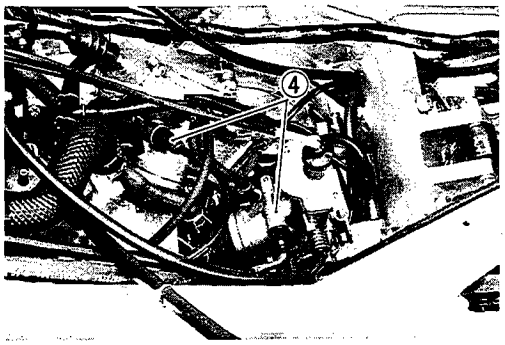

- Remove the idle adjustment bracket bolts.

- Remove the hose .

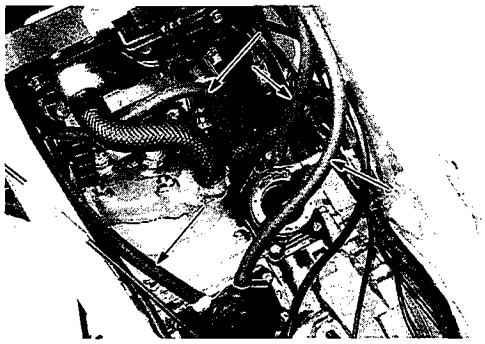

- Remove the E ring Ⓑ from the throttle stop screw knob Ⓐ .

NOTE:
When disconnecting the throttle cables and choke cable, it is necessary to remove the carburetor top caps and starter plunger.

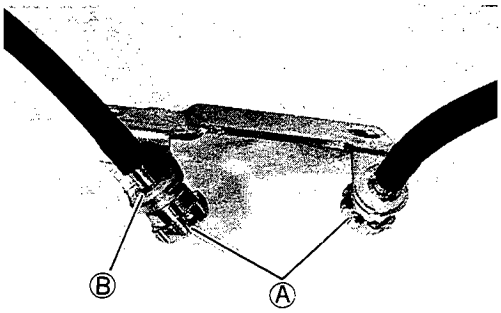

Downloaded from www.Manualslib.com manuals search engine

- Remove the carburetor cap and take out the throttle valve ① and return spring ② .

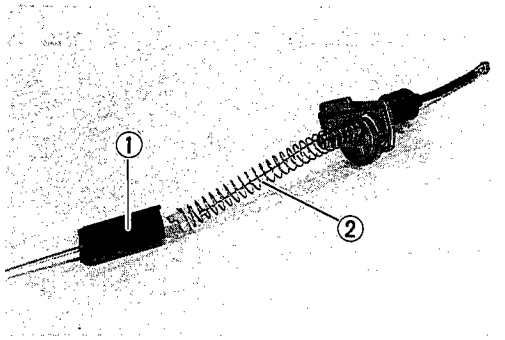

- Remove the throttle cable ③ .

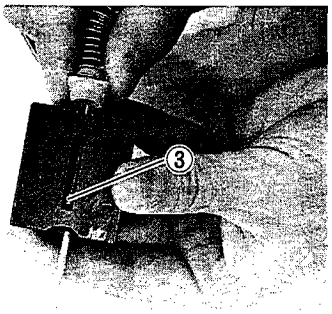

① Throttle valve
② Jet needle
③ E-ring
④ Ring
⑤ Spring
⑥ O-ring
⑦ Top cap

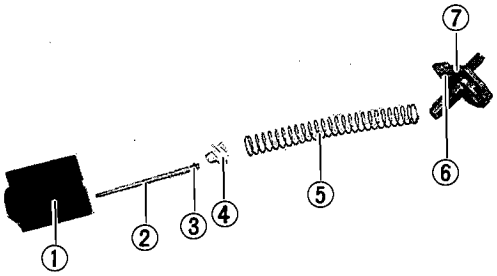

- Remove the float chamber screws.

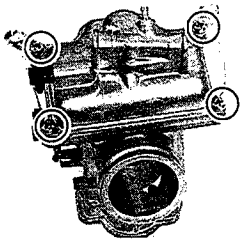

- Remove the float pin ⑧ and float.

CAUTION:
When removing the float pin, be careful not to damage the carburetor body.

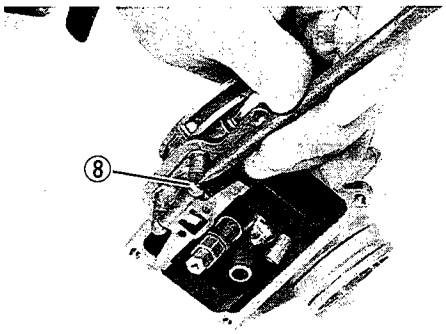

Downloaded from www.Manualslib.com manuals search engine

- Remove the main jet ① and take out the needle jet from the bore side.
- Remove the pilot jet ② .
- Remove the needle valve retainer screw ③ and take out the needle valve ④ .

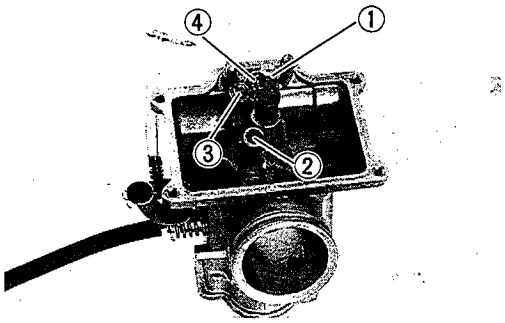

INSPECTION

Check following items for any damage or clogging.

* Pilot jet
* Main jet
* Main air jet
* Needle jet air bleeding holes
* Float
* Needle valve O-ring
* Gasket and O-ring
* Pilot outlet and by-pass hole
* Fuel pipe O-rings
* Power jet
* Air jet

NEEDLE VALVE INSPECTION

If foreign matter is caught between the valve seat and the needle, gasoline will continue flowing and cause it to overflow. If the seat and needle are worn beyond the permissible limits, similar trouble will occur. Conversely, if the needle sticks, gasoline will not flow into the float chamber. Clean the float chamber and float parts with gasoline. If the needle is worn as shown in the illustration, replace it together with a valve seat. Clean the fuel passage of the mixing chamber with compressed air.

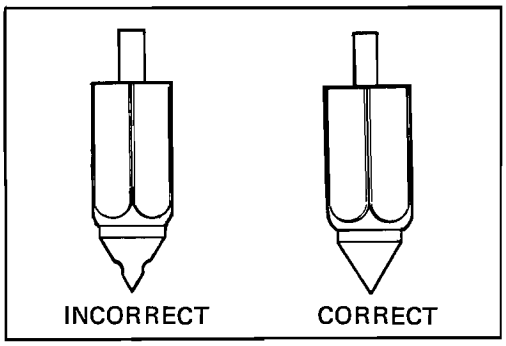

FLOAT HEIGHT ADJUSTMENT

- Place the carburetor body upside down and lift up the float by hand.
- Gradually lower the float and observe the clearance between the float tongue and the end of the needle valve.
- Stop lowering the float and hold it when the tongue just begins to contact the end of needle valve.
- Measure the float height Ⓐ from the float chamber body mating surface.

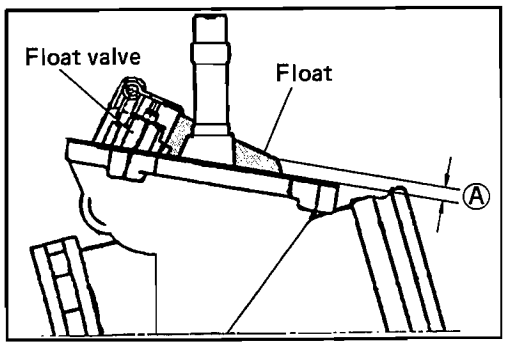

Float height Ⓐ : 8 ± 1.0 mm (0.31 ± 0.04 in)

Downloaded from www.Manualslib.com manuals search engine

CARBURETOR IDLE ANGLE ADJUSTMENT

- Loosen the lock nut and turn in the cable adjuster ① .
- Turn back the throttle stop screw ② to lower the throttle valve ③ to the full close position.

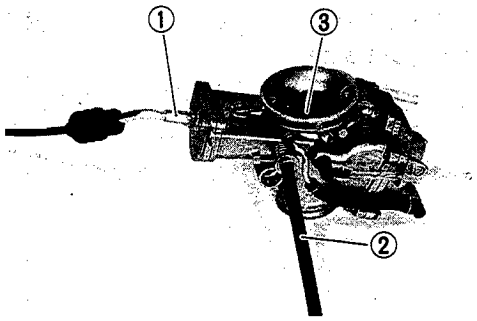

- Adjust the throttle valve idle position by turning the throttle stop screw so that the minimum clearance between the throttle valve ④ and the bore comes to the specification. Use a piece of 0.7 mm wire or a drill bit for checking the clearance.

Clearance: 0.7 mm

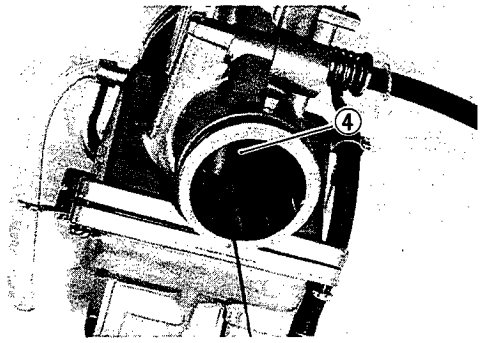

FUEL LEVEL INSPECTION

- Remove carburetor drain plug and install the fuel level gauge.

09913-10730: Fuel level gauge

- Incline the carburetor forward at an angle of 30° from vertical line when measured at the bore end face.
- Set the fuel level gauge vertically and measure the fuel level from the reference point (protrusion).

Distance Ⓐ : 7.1 ± 1.0 mm (0.28 ± 0.02 in)

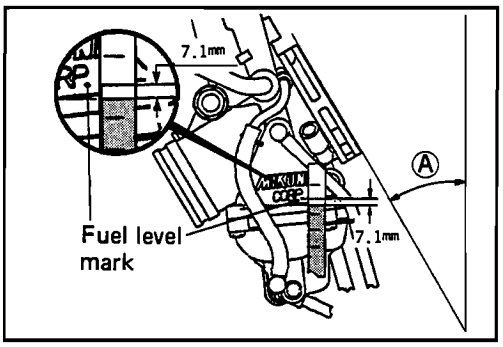

REASSEMBLY AND REMOUNTING

- Pass the interference hose ⑤ between the carburetor throttle screw ⑥ and the cable.

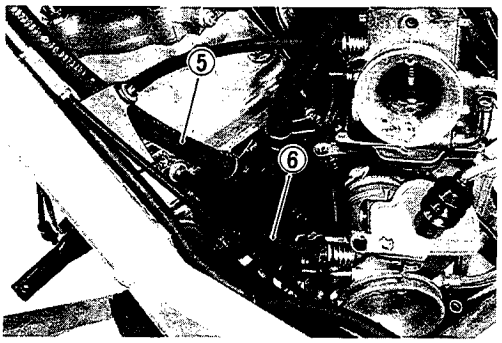

Downloaded from www.Manualslib.com manuals search engine

- Install the choke plungers ① and ② .

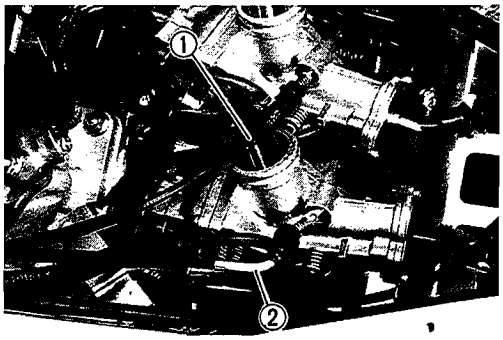

- Position the right and left carburetors properly and tighten their clamp screws.
- Connect the fuel hose ③ .
- Connect the drain hoses ④ .

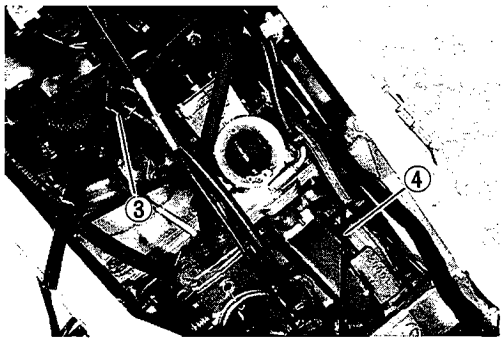

- Install the throttle stop screw knob bracket on the frame. The rear bolt should be tightened together with the fairing stay ⑤ .

THROTTLE CABLE ADJUSTMENT

- Refer to page 2-6.

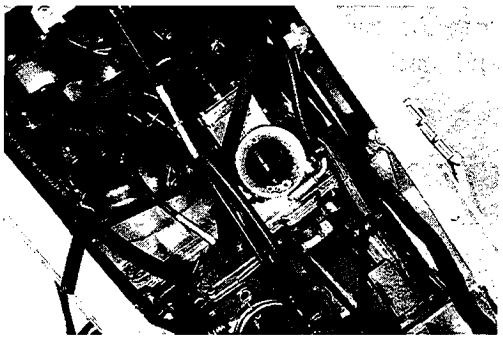

- Adjust the cable slack of right and left carburetors to 0.5 mm.
- Loosen the lock nut ⑥ of carburetor and turn in or out the adjuster ⑦ of the carburetor until the specified value is obtained.

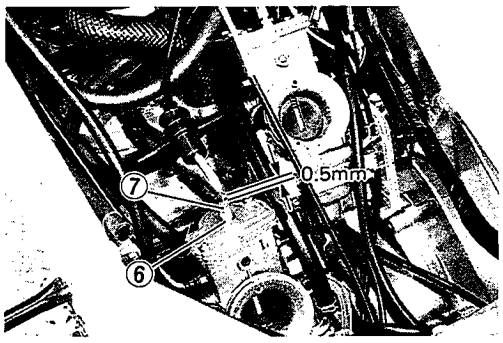

Downloaded from www.Manualslib.com manuals search engine

CHOKE CABLE

- Refer to page 2-6.

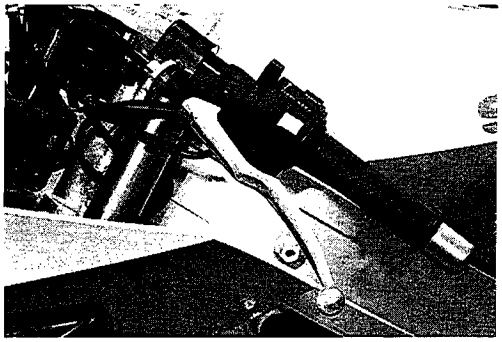

- Actuator, throttle and oil pump cable adjustment.
- Refer to page 3-11.

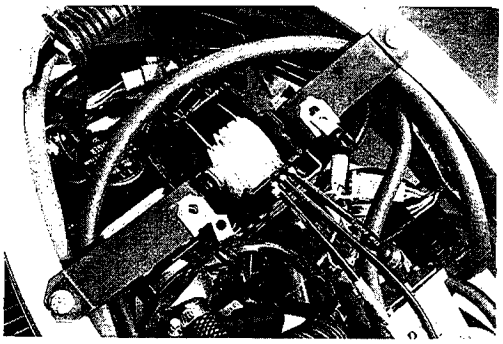

OIL PUMP

BLEEDING AIR FROM THE OIL PUMP CIRCUIT

Whenever evidence is noted of some air having leaked into the oil pipe from the oil tank in a machine brought in for servicing, or if the oil pump has to be removed for servicing, be sure to carry out an air bleeding operation with the oil pump in place before returning the machine to the user.

To bleed the air, hold the machine in standstill condition. Loosen the screw ① to let out the air and after making sure that the trapped air has all been bled, tighten the screw good and hard.

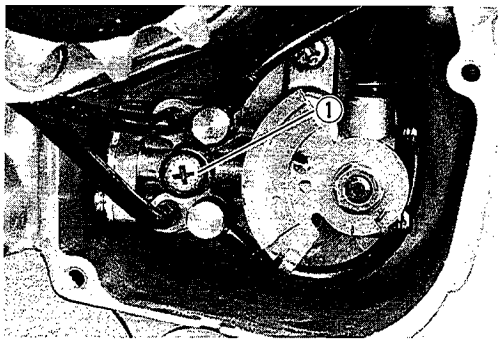

CHECKING OIL PUMP

Use the special tool, and check the pump for capacity by measuring the amount of oil the pump draws during the specified interval.

- Have the tool filled with SUZUKI CCI or CCI SUPER OIL and connect it to the suction side of the pump.
- Run the engine at 2 000 r/min.

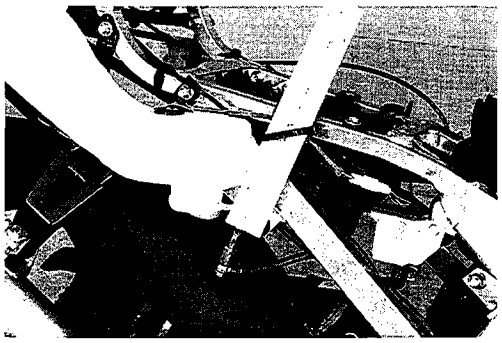

Downloaded from www.Manualslib.com manuals search engine

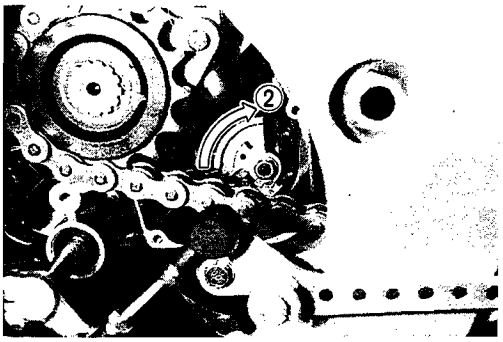

- Holding engine speed at the same 2 000 r/min., move the lever up to the fully open position ② and let the pump draw for 2 minutes. For this operation, the reading taken on the device should be 4.1 — 5.3 ml.

09900-21602: CCI oil gauge

Oil discharge amount: 4.1 — 5.3 ml at 2 000 r/min for 2 minutes

NOTE:
Adjust both throttle and oil pump control cables' play after replacing the oil pump. (Refer to page 2-7.)

Downloaded from www.Manualslib.com manuals search engine

Downloaded from www.Manualslib.com manuals search engine

COOLING SYSTEM

CONTENTS

COOLING SYSTEM 5-1
COOLING SOLUTION 5-2
REMOVAL, INSPECTION 5-3
THERMOSTAT 5-4
WATER TEMPERATURE AND TEMPERATURE GAUGE 5-5

5

Downloaded from www.Manualslib.com manuals search engine

COOLING SYSTEM

DESCRIPTION

The engine is cooled by coolant set in forced recirculation through jackets formed in the cylinder and head, and through the radiator. For the water pump, a high-capacity centrifugal pump is used. For the radiator, a tube-and-fin type aluminum in material, and is characterized by lightness in weight and good heat dissipation.

The thermostat is of wax pellet type, complete with a valve as the means of temperature-dependent control over the flow of water through the radiator. The valve is actuated by the temperature-sensitive wax contained in the pellet.

Referring to the following illustration, the thermostat is in closed condition, so that water recirculates through the route comprising pump, engine, by-pass holes of the thermostat and radiator in the regulated condition.

As the coolant temperature rises to 50°C and the thermostat valve unseats, the normal water flow is established. At about 65°C of rising coolant temperature, the thermostat becomes completely open and the most of heat is released to the atmosphere through the radiator core.

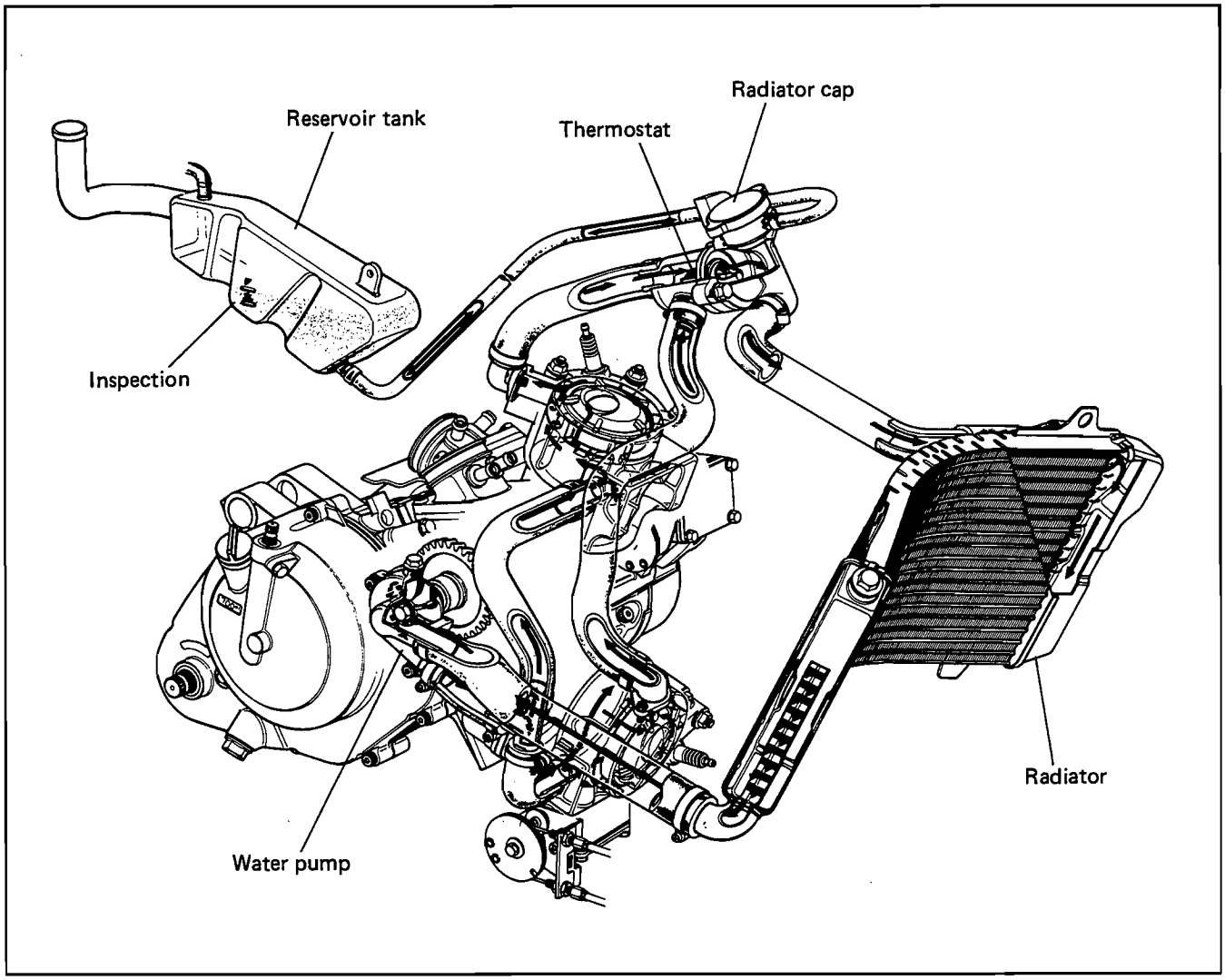

Downloaded from www.Manualslib.com manuals search engine

COOLING SOLUTION

At the time of manufacture, the cooling system is filled with a 50 : 50 solution of distilled water and anti-freeze/summer coolant. This 50 : 50 mixture will provide excellent heat protection, and will protect the cooling system from freezing at temperatures above –31°C.

If the motorcycle is to be exposed to temperatures below –31°C, this mixing ratio should be increased up to 55% or 60% according to the Fig. 2.

NOTE:

The characteristics of different anti-freezes vary. Read the label to know the protection you will have.

CAUTION:

Do not put in more than 60% anti-freeze or less than 50%. Do not mix different brands of anti-freeze.

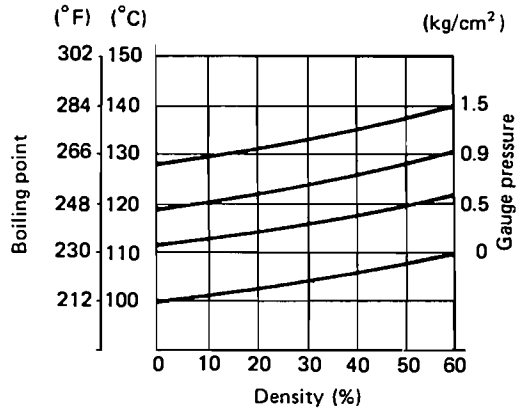

Fig. 1 Coolant density-boiling point curve.

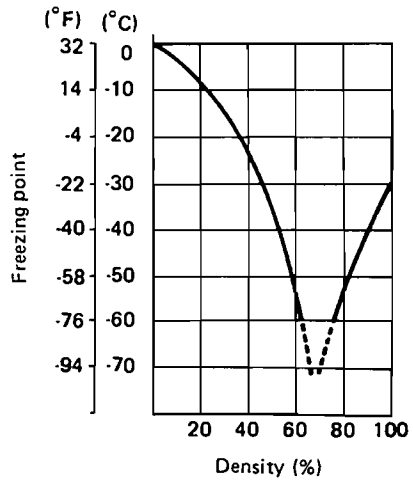

Fig. 2 Coolant density-freezing point curve.

Downloaded from www.Manualslib.com manuals search engine

REMOVAL

- Remove the fairing. (Refer to page 7-1.)
- Drain the cooling solution by removing drain plug. (Refer to page 3-1.)
- Disconnect water hoses. (Refer to page 3-4.)
- Remove the radiator.

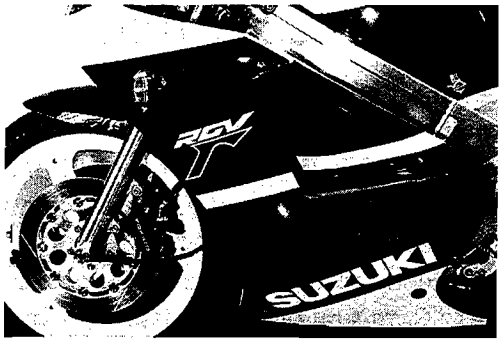

INSPECTION

Before removing the radiator and draining coolant, inspect the following two items.

1. Test the cooling system for tightness by using the radiator tester as follows:
   Remove the radiator cap, and connect the tester to the filler. Give a pressure of about 100 kPa (1.0 kg/cm^2) and see if the system holds this pressure for 10 seconds. If the pressure should fall during this 10 second-interval, it means that there is a leaking point in the system; in such a case, inspect the entire system and replace the leaking component or part.
2. Test the radiator cap for relieving pressure by using the radiator tester in the following manner: Fit the cap to the tester, as shown, and build up pressure slowly by operating the tester. Make sure that the pressure build-up stops at 110 ± 10 kPa (1.1 ± 0.1 kg/cm^2) and that, with the tester held standstill, the cap is capable of that pressure for at least 10 seconds. Replace the cap if it is found not to satisfy either of these two requirements.

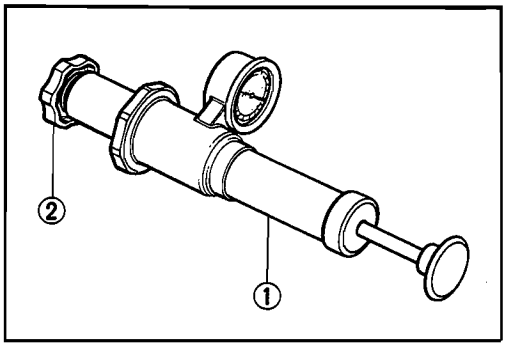

① Radiator cap tester
② Radiator cap

Radiator cap valve release pressure: 110 ± 10 kPa (1.1 ± 0.1 kg/cm^2)

3. Road dirt or trashes stuck to the fins must be removed. Use of compressed air is recommended for this cleaning. Fins bent down or dented can be repaired by straightening them with the blade of a small screwdriver.
4. Any water hose found in cracked condition or flattened must be replaced.

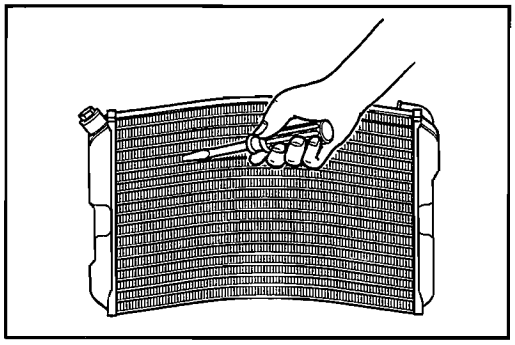

INSTALLATION

The radiator is reinstalled in the reverse order of the removal procedure. After installing the radiator, be sure to add cooling water: refer to page 2-8 for refilling information.

Downloaded from www.Manualslib.com manuals search engine

THERMOSTAT

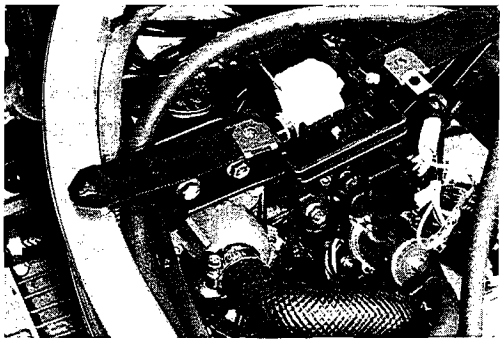

REMOVAL

- Remove the seat and fuel tank. (Refer to page 2-4.)
- Drain the coolant.
- Remove the water hose and thermostat cover ①.

INSPECTION

Inspect the thermostat pellet for signs of cracking.

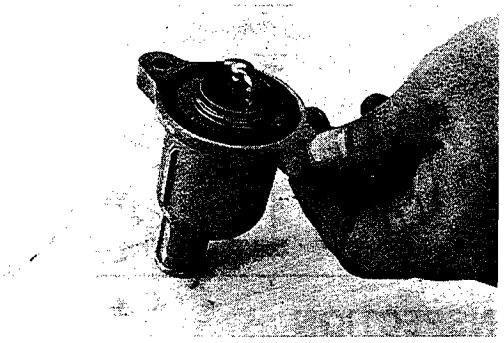

Test the thermostat at the bench for control action, in the following manner:

- Pass a string between flange, as shown in the figure.
- Immerse the thermostat in the water contained in the jar, as shown in the figure. Note that the immersed thermostat is in suspension. Heat the water by placing the jar on a stove and observe the rising temperature on the thermometer.
- Read the thermometer just when the thermostat drops to the bottom of the jar. This reading, which is the temperature level at which the thermostat valve begins to open, should be anywhere between 48° and 52°C.

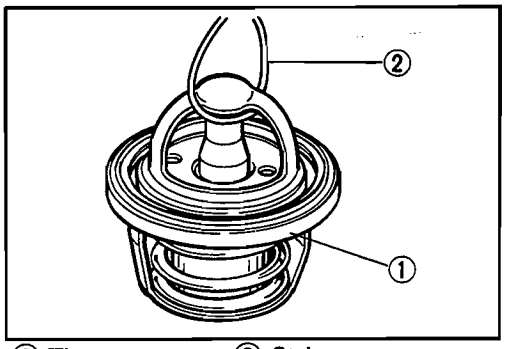

① Thermostat ② String

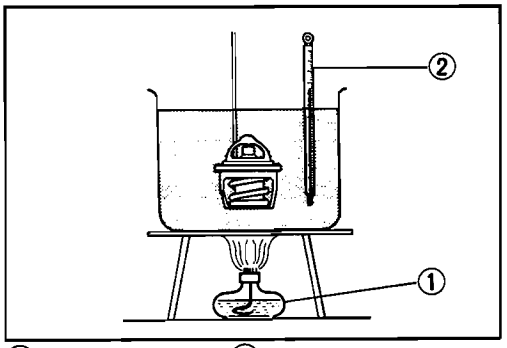

① Stove ② Thermometer

Thermostat valve opening temperature: 50 ± 2°C

- Keep on heating the water to raise its temperature to and beyond 65°C.
- Just when the water reaches 65°C, the thermostat valve should have lifted by at least 7.0 mm.

Thermostat valve lift: Over 7.0 mm at 65°C

- A thermostat failing to satisfy either of the two requirements (start-to-open temperature and valve lift) must be replaced.
- Tighten the thermostat cover bolts to the specification.

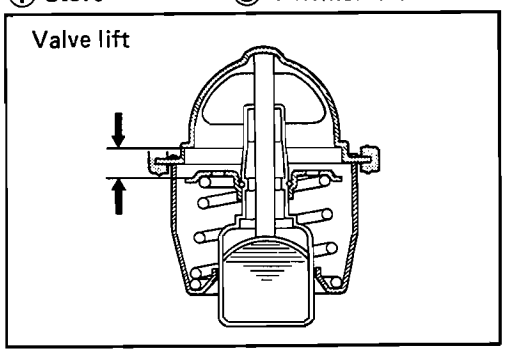

Downloaded from www.Manualslib.com manuals search engine

WATER TEMPERATURE AND TEMPERATURE GAUGE

The following circuit diagram shows the electrical wiring for the thermometer. The major components are: temperature gauge in contact with cooling water; and temperature indicator (water temperature meter).

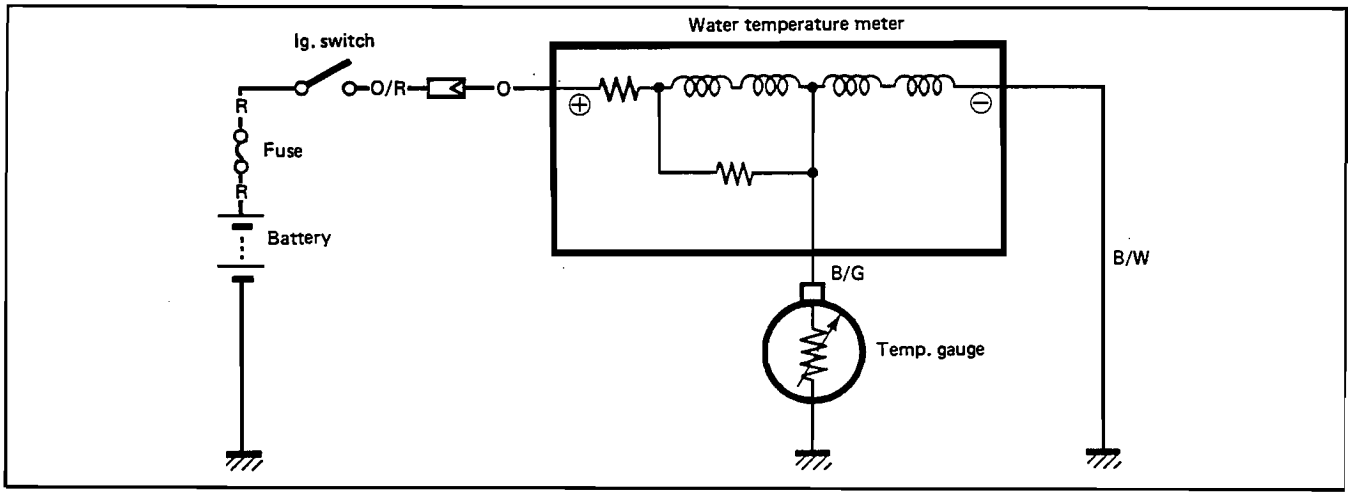

INSPECTION

Test the temperature gauge sensor at the bench to see if its ohmic value changes, as specified, with temperature. The test is to be run as follows: Connect the temperature guage to the ohmmeter and place it in the water contained in a jar, which is placed on a stove; heat the water to raise its temperature slowly, reading the thermometer placed in the jar and also the ohmmeter. A temperature gauge whose ohmic value does not change in the proportion indicated below must be replaced.

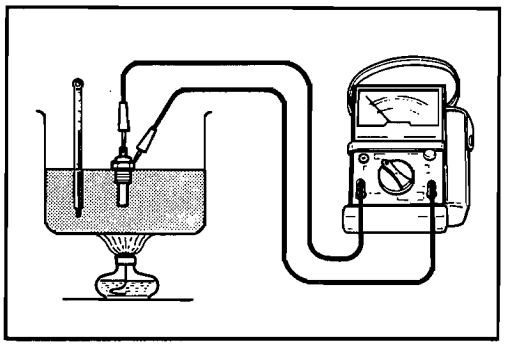

Temperature gauge specification

Water temp. (°C)	Standard resistance (Ω)
50	Approx. 134 – 179
120	Approx. 15 – 17

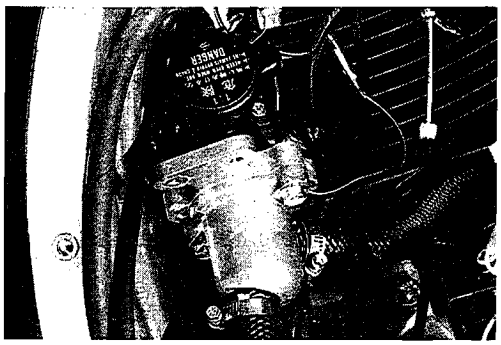

If the resistance is noted to show infinity or too much different resistance value, temperature gauge must be replaced.

For inspecting the water temperature meter, refer to page 6-14.

REASSEMBLY

Apply SUZUKI BOND No. 1207B to the thread portion of the temperature gauge and install it to the thermostat cover.

99000-31140: SUZUKI Bond No. 1207B

Tightening torque: 6 – 10 N·m (0.6 – 1.0 kg-m)

Tighten the thermostat cover bolt and nut to the specification.

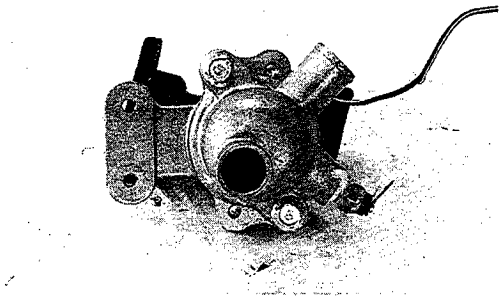

Downloaded from www.Manualslib.com manuals search engine

ELECTRICAL SYSTEM

CONTENTS

CHARGING SYSTEM 6- 1

IGNITION SYSTEM 6- 5

AUTOMATIC EXHAUST VALVE CONTROL UNIT AND ACTUATOR 6- 8

WATER TEMPERATURE METER 6-13

OIL LEVEL GAUGE 6-14

LAMPE 6-15

SPEEDOMETER 6-16

SWITCHES 6-18

BATTERY 6-19

Downloaded from www.Manualslib.com manuals search engine

CHARGING SYSTEM

DESCRIPTION

The diagram below shows the charging system circuit composed of an AC generator, regulator/-rectifier unit and battery.
The AC current generated from AC generator is rectified by rectifier and is converted into DC current, then it charges the battery.

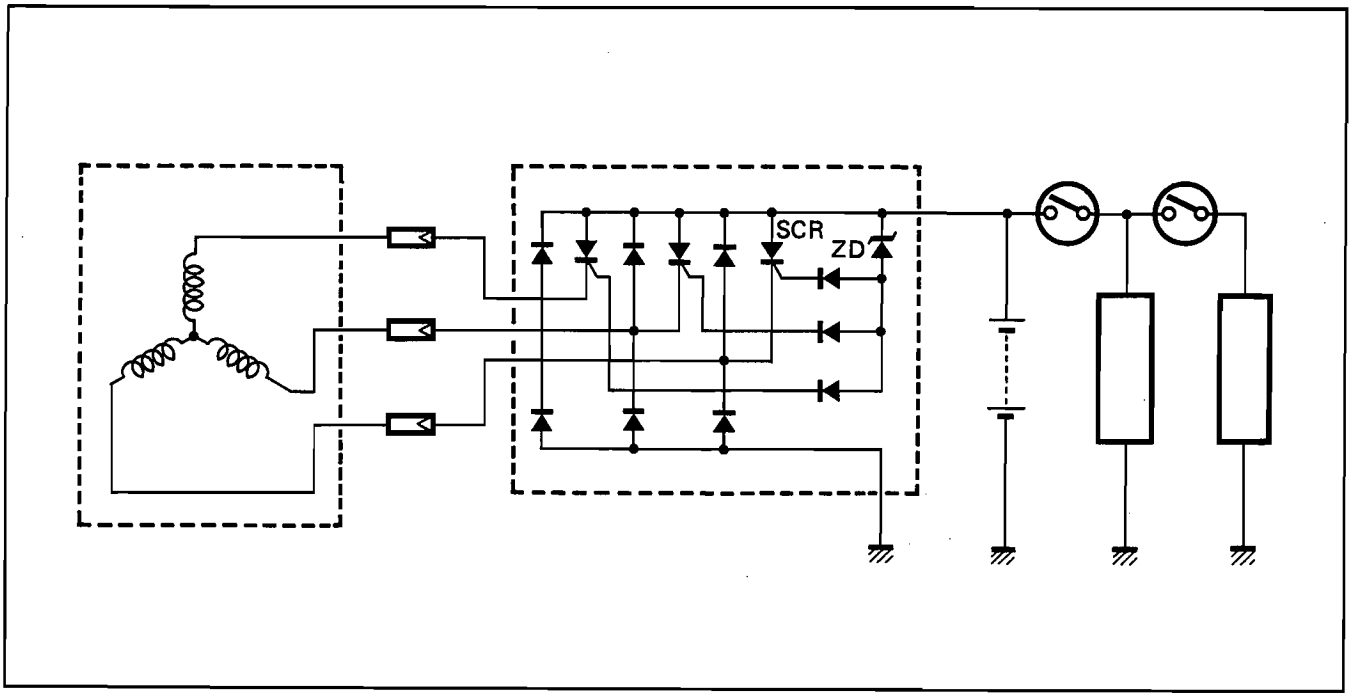

Function of Regulator

While the engine r/min is low and the generated voltage of AC generator is lower than the predetermined voltage of Regulator, the regulator does not function, and therefore the generated current charges the battery directly.

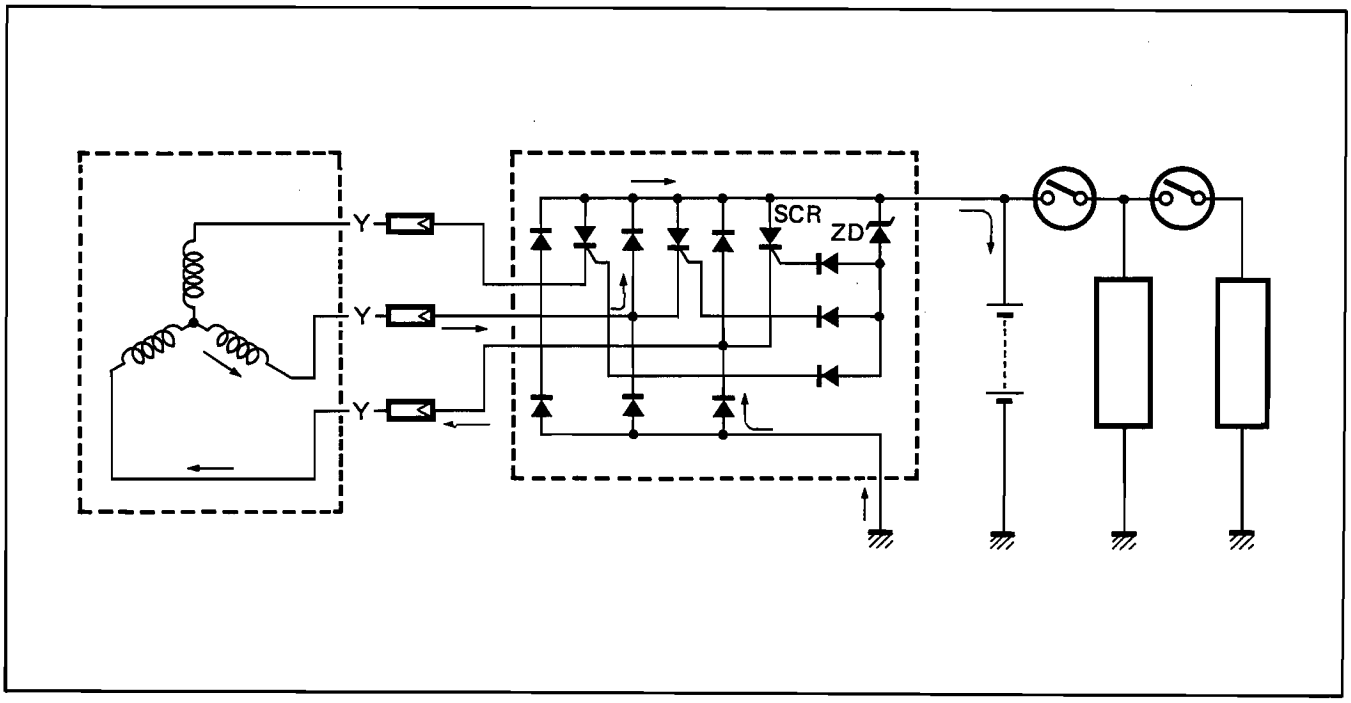

Downloaded from www.Manualslib.com manuals search engine

When the engine r/min becomes higher, the generated voltage of AC generator also becomes higher. This causes the voltage between points Ⓐ and Ⓑ of regulator rises, and when it reaches the designed voltage of regulator, ZD (Zener diode) becomes "ON" condition and, signal will be sent to the SCR (Thyristor) gate and SCR will become "ON" condition.
Then the SCR becomes conductive to the direction from point Ⓒ to point Ⓓ. With the SCR conductive, the current generated from the AC generator is short circuited through SCR without charging the battery and returns to AC generator again. At the end of this state, since the AC current generated from AC generator flows into the point Ⓓ, reverse current tends to flow to SCR, then the circuit of SCR turns to OFF mode and begins to charge the battery again. Thus these repetitions maintain charging voltage to the battery constant and protect it from overcharging.

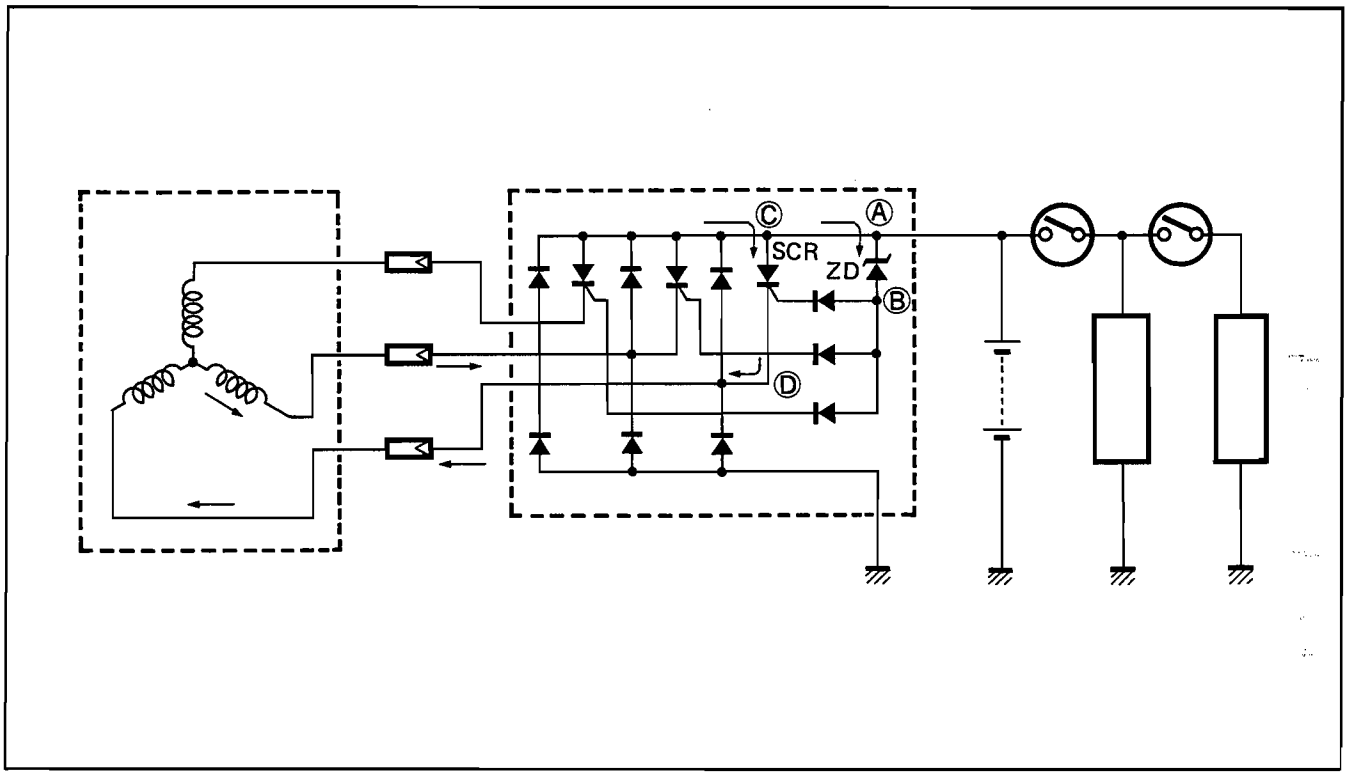

Downloaded from www.Manualslib.com manuals search engine

INSPECTION

CHARGING OUTPUT CHECK

- Remove the seat and fuel tank. (Refer to page 7-4.)
- Start the engine and keep it running at 5 000 r/min with lighting switch turned ON and dimmer switch turned to HI position.
- Using the pocket tester, measure the DC voltage between the battery terminal ⊕ and ⊖ .
  If the tester reads under 13.0V or over 15.0V, check the AC generator no-load performance and regulator/rectifier.

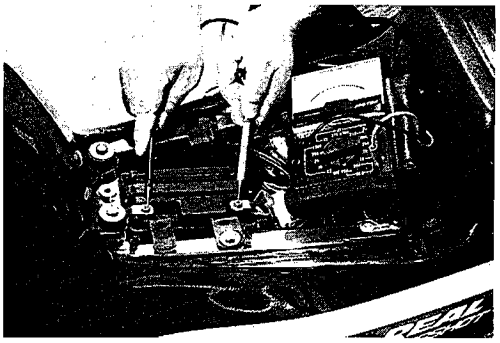

NOTE:
When making this test, be sure that the battery is in fully-charged condition.

STD charging output: 13.0 – 15.0V (DC) at 5 000 r/min

09900-25002: Pocket tester

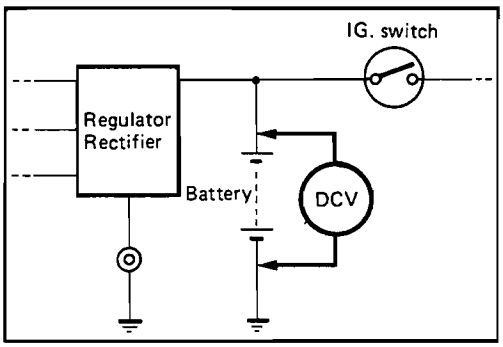

AC GENERATOR NO-LOAD PERFORMANCE

- Remove the left fairing.
- Disconnect the AC generator lead wire coupler.
- Start the engine and keep it running at 5 000 r/min.
- Using the pocket tester, measure the AC voltage between the three yellow lead wires.
  If the tester reads under 53V, the AC generator is faulty.

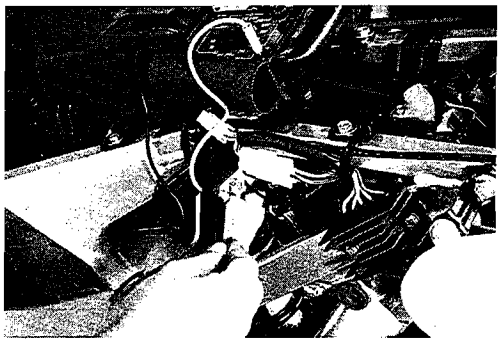

STD No-load performance: More than 49V (AC) at 5 000 r/min

09900-25002: Pocket tester

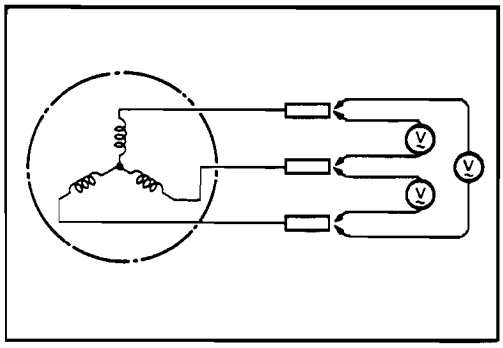

Downloaded from www.Manualslib.com manuals search engine

AC GENERATOR CONTINUITY CHECK

- Using the pocket tester, check the continuity between the Yellow lead wires of the stator.
  Also check that the stator core is insulated.

NOTE:
When making this test, it is not necessary to remove the AC generator.

09900-25002: Pocket tester

STD resistance: 0.1 – 1.0 Ω

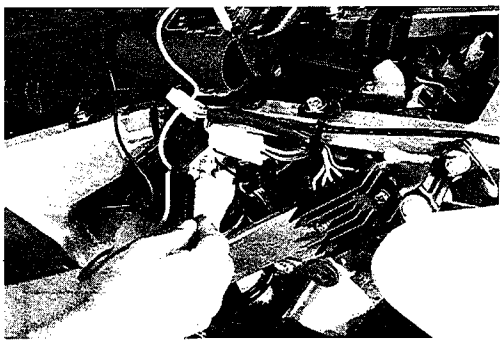

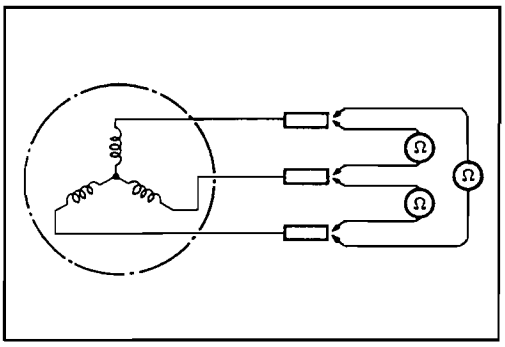

REGULATOR/RECTIFIER

- Remove the seat, fuel tank, right and left frame covers.
- Remove the front fairing and windshield.
- Using the pocket tester (x 1kΩ range), measure the resistance between the lead wires in the following table.
  If the resistance checked is incorrect, replace the regulator/rectifier.

09900-25002: Pocket tester

Unit: Approx. kΩ

⊖ Probe of tester to:	⊕ Probe of tester to: Y	Y	Y	R	B/W
Y		∞	∞	1 – 10	∞
Y	∞		∞	1 – 10	∞
Y	∞	∞		1 – 10	∞
R	∞	∞	∞		∞
	1 – 10	1 – 10	1 – 10	2 – 20	

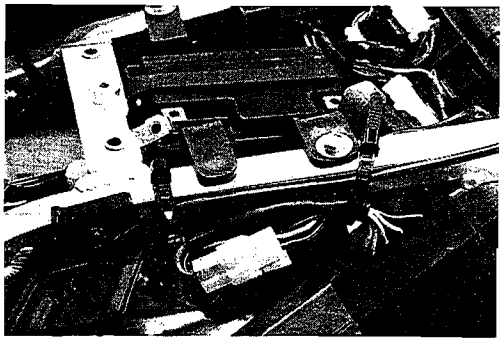

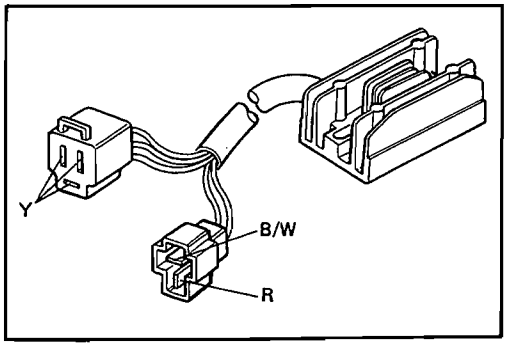

CAUTION:
As transistors, capacitors, Zener diodes, etc. are used inside this regulator/rectifier, the resistance values will differ when an ohmmeter other than the SUZUKI pocket tester is used.

Downloaded from www.Manualslib.com manuals search engine

IGNITION SYSTEM

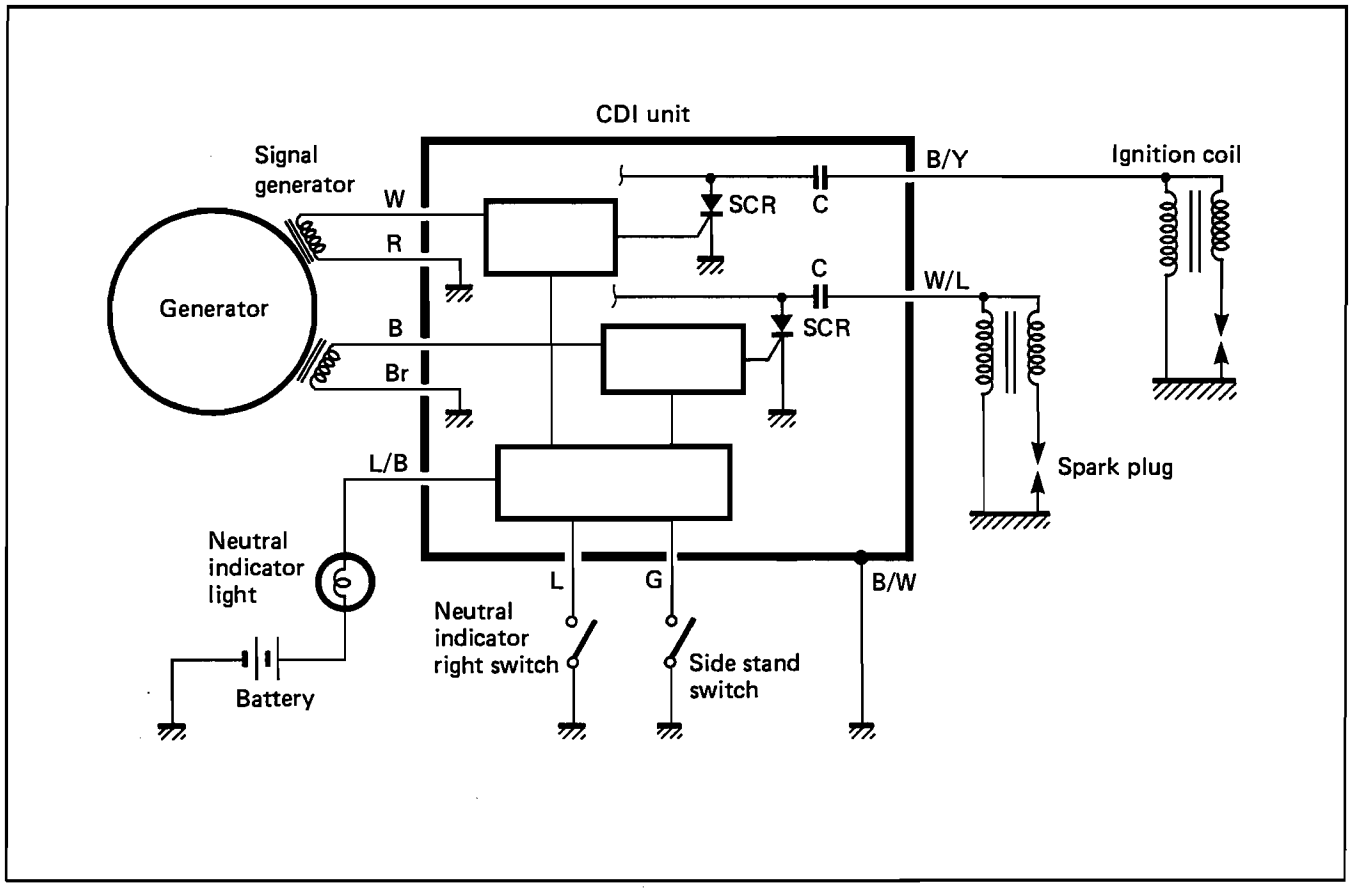

DESCRIPTION

The RGV250 engine is equipped with a new type ignition system. This new system minimizes timing fluctuations. It has an "ignition timing control circuit" which accurately controls ignition timing depending on the engine r/min.

OPERATION

There is a DC-DC converter in the CDI unit, which steps up the battery voltage to a higher voltage and charges the capacitor (C). An SCR connected to the capacitor becomes conductive (turns on) when a forward voltage signal is sent to its gate allowing the electric energy stored in the capacitor (C) to discharge instantly to the ignition primary coil. This then causes a high voltage to be induced in the secondary coil and a hot spark jumps across the spark plug gap. Therefore, the spark in the spark plug occurs when the SCR is turned on. In other words, the SCR's being turned on is the ignition timing (or spark timing). This ignition timing is controlled by the control circuit which processes the signal generator pulses to form an SCR gate signal. The signal is then sent to the SCR just when the crankshaft has reached the best ignition timing for the current engine revolutions.

Downloaded from www.Manualslib.com manuals search engine

INSPECTION

IGNITION COIL (Checking with Electro Tester)

- Remove the seat and fuel tank.
- Remove the ignition coil from the frame.
- Using the electro tester, test each ignition coil for sparking performance. The test connection is as indicated. Make sure that the three-prong sparking distance is at least 8 mm.
  If no sparking or orange color sparking occurs with this gap, then it is defective and must be replaced.

09900-28107: Electro tester

STD Spark performance: 8 mm (0.3 in)

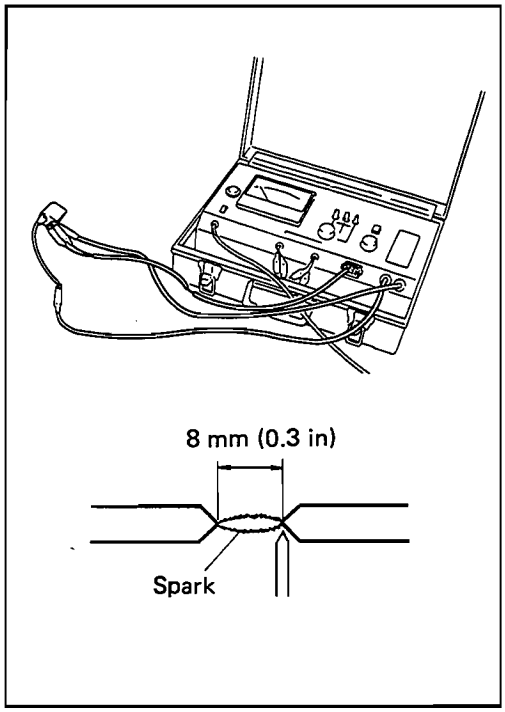

IGNITION COIL (Checking with Pocket Tester)

- A SUZUKI pocket tester or an ohmmeter may be used, instead of the electro tester. In either case, the ignition coil is to be checked for continuity in both primary and secondary windings. Exact ohmic readings are not necessary, but, if the windings are in sound condition, their continuity will be noted with these approximate ohmic values.

09900-25002: Pocket tester

Ignition coil resistance	
Primary	0.17 – 0.23 Ω
Secondary	10 – 30 kΩ

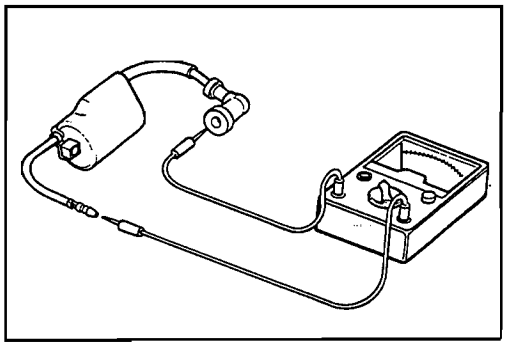

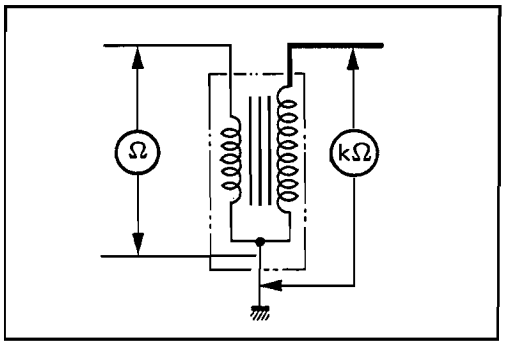

Downloaded from www.Manualslib.com manuals search engine

PICK-UP COIL

- Remove the Lower fairing and disconnect the pick-up coil lead coupler.
- Using a pocket tester (x 100 Ω) measure the resistance between Black and Brown lead wires. If the resistance is infinity or less than the specification, the pick-up coil must be replaced.

09900-25002: Pocket tester

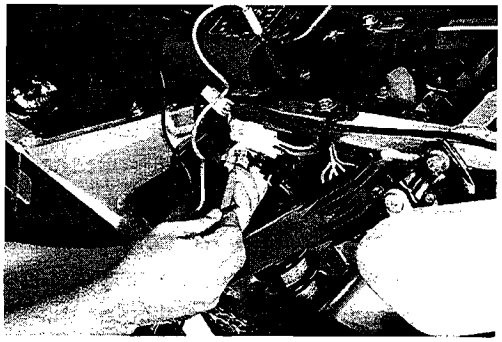

- Signal generator

Tester connected to:	Resistance	Tester range
R – W	20 – 200 Ω	x 10 Ω
B – Br	20 – 200 Ω	x 10 Ω

CDI UNIT (Checking with Pocket Tester)

- Using the SUZUKI pocket tester, bring the ⊕ probe and the ⊖ probe into contact with each lead wire of the CDI unit, check for continuity, and measure the resistance value.

09900-25002: Pocket tester

- When the continuity and the resistance values are as shown in the following table, the CDI unit is judged to be normal.

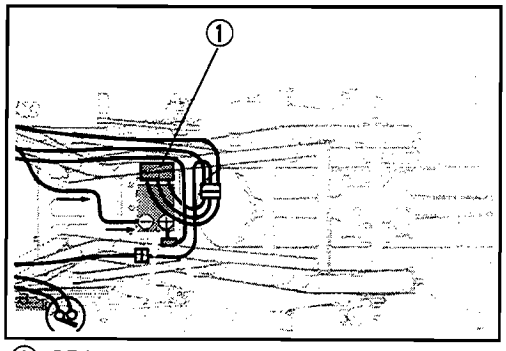

① CDI unit

CAUTION:

As capacitors, diodes, etc. are used inside this CDI unit, the resistance values will differ when an ohmmeter other than SUZUKI pocket tester is used.

- Measure the resistance between the leads.
- Tester range – x kΩ

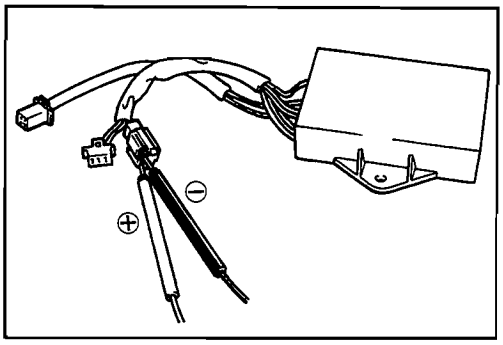

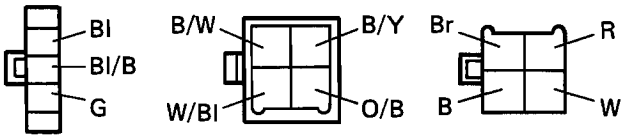

Downloaded from www.Manualslib.com manuals search engine

Unit: Approx. kΩ

		⊕ Probe of tester to:										
		B	W	Br	R	G	Bl/B	Bl	W/Bl	O/B	B/W	B/Y
⊖ Probe of tester to:	B		0	1 – 10	1 – 10	1 – 10	∞	2 – 20	∞	∞	0	∞
	W	0		1 – 10	1 – 10	1 – 10	∞	2 – 20	∞	∞	0	∞
	Br	1 – 10	1 – 10		2 – 20	2 – 20	∞	3 – 30	∞	∞	1 – 10	∞
	R	1 – 10	1 – 10	2 – 20		2 – 20	∞	3 – 30	∞	∞	1 – 10	∞
	G	1 – 10	1 – 10	2 – 20	2 – 20		∞	1 – 10	∞	∞	1 – 10	∞
	Bl/B	∞	∞	∞	∞	∞		1 – 10	∞	∞	∞	∞
	Bl	∞	∞	∞	∞	∞	∞		∞	∞	∞	∞
	W/Bl	1 – 10	1 – 10	2 – 20	2 – 20	2 – 20	∞	5 – 30		∞	1 – 10	∞
	O/B	2 – 20	2 – 20	2 – 20	3 – 30	2 – 20	∞	5 – 30	∞		2 – 20	∞
	B/W	0	0	1 – 10	1 – 10	1 – 10	∞	2 – 20	∞	∞		∞
	B/Y	1 – 10	1 – 10	2 – 20	2 – 20	2 – 20	∞	3 – 30	∞	∞	1 – 10	

CDI UNIT (Checking with Ignitor Checker)

This section explains the ckecking procedure for the CDI unit using Ignitor Checker (special tool).
With this checker, the CDI unit can be checked either on the machine or off the machine. The following explains the checking procedure on the machine.

09931-64410: Ignitor Checker

- Remove the seat and fuel tank. (Refer to page 3-2.)
- Remove the under fairing. (Refer to page 3-2.)

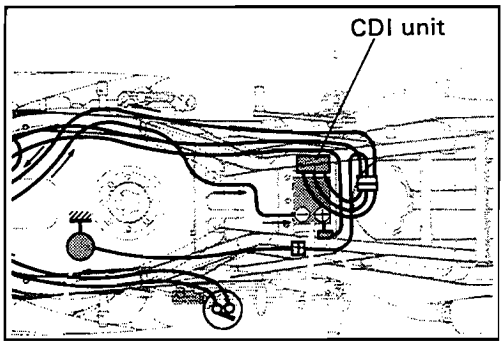

WIRING PROCEDURE:

- Disconnect CDI lead wire couples at the CDI unit.

Downloaded from www.Manualslib.com manuals search engine

- Prepare the ignitor checker lead wire "MODE 4" ② which comes supplied with the ignitor checker and connect its end to the CDI unit and another end to the checker.
- Connect the power source leads ① to the battery.

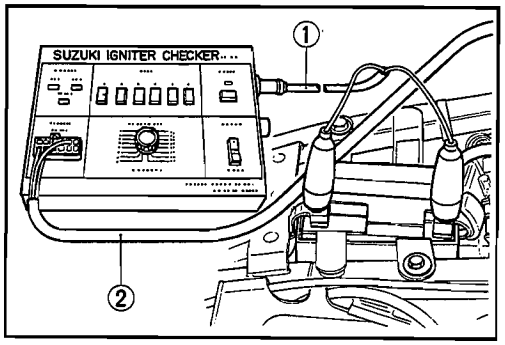

CAUTION:

* **Be sure the Black lead is connected to the battery ⊖ terminal and Red lead to the ⊕ terminal.**
* **Before connecting the power source leads, make sure both "POWER" button and "START" switch are in "off" position (POWER button not depressed).**

NOTE:
Be sure the battery used is in fully-charged condition.

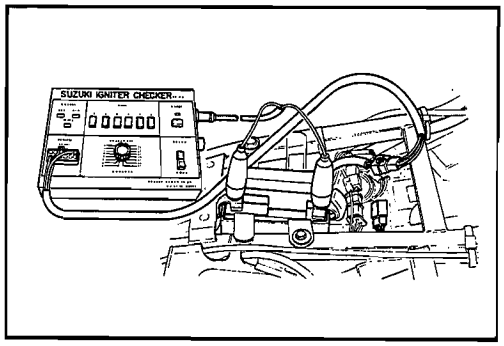

CHECK PROCEDURE:
With all the lead wires properly connected, check the CDI unit as follow.

Depress "MODE 4" button then "POWER" button. This time, "POWER" lamp should come on. If not, battery is undercharged.

NOTE:
In this check, the monitor does not operate.

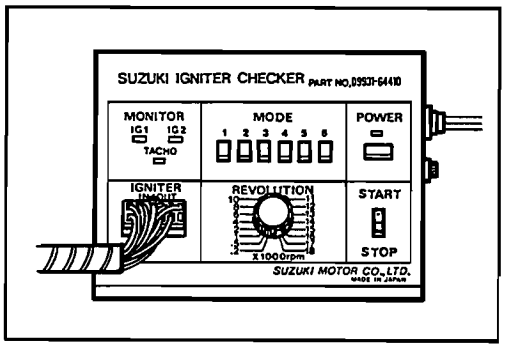

- Remove the spark plugs from front and rear cylinders. Connect the respective plug caps and place the spark plugs on the cylinder head.
  If blue hot sparks are seen in the spark plugs, the system is functioning properly.

NOTE:
This checking presupposes that the ignition coil and the signal generator coil used for checking are good ones.

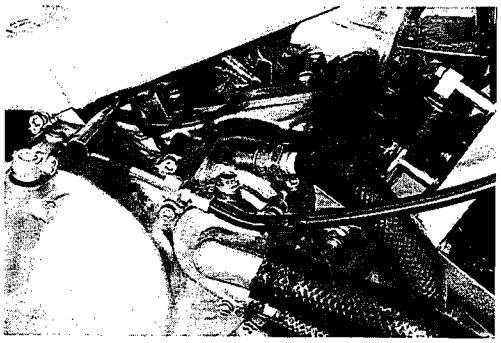

CAUTION:
When making this test, keep the fire away from the cylinder head.

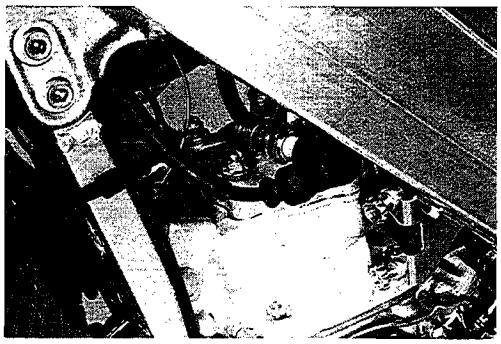

Downloaded from www.Manualslib.com manuals search engine

AUTOMATIC EXHAUST VALVE CONTROL UNIT AND ACTUATOR

DIAGRAM

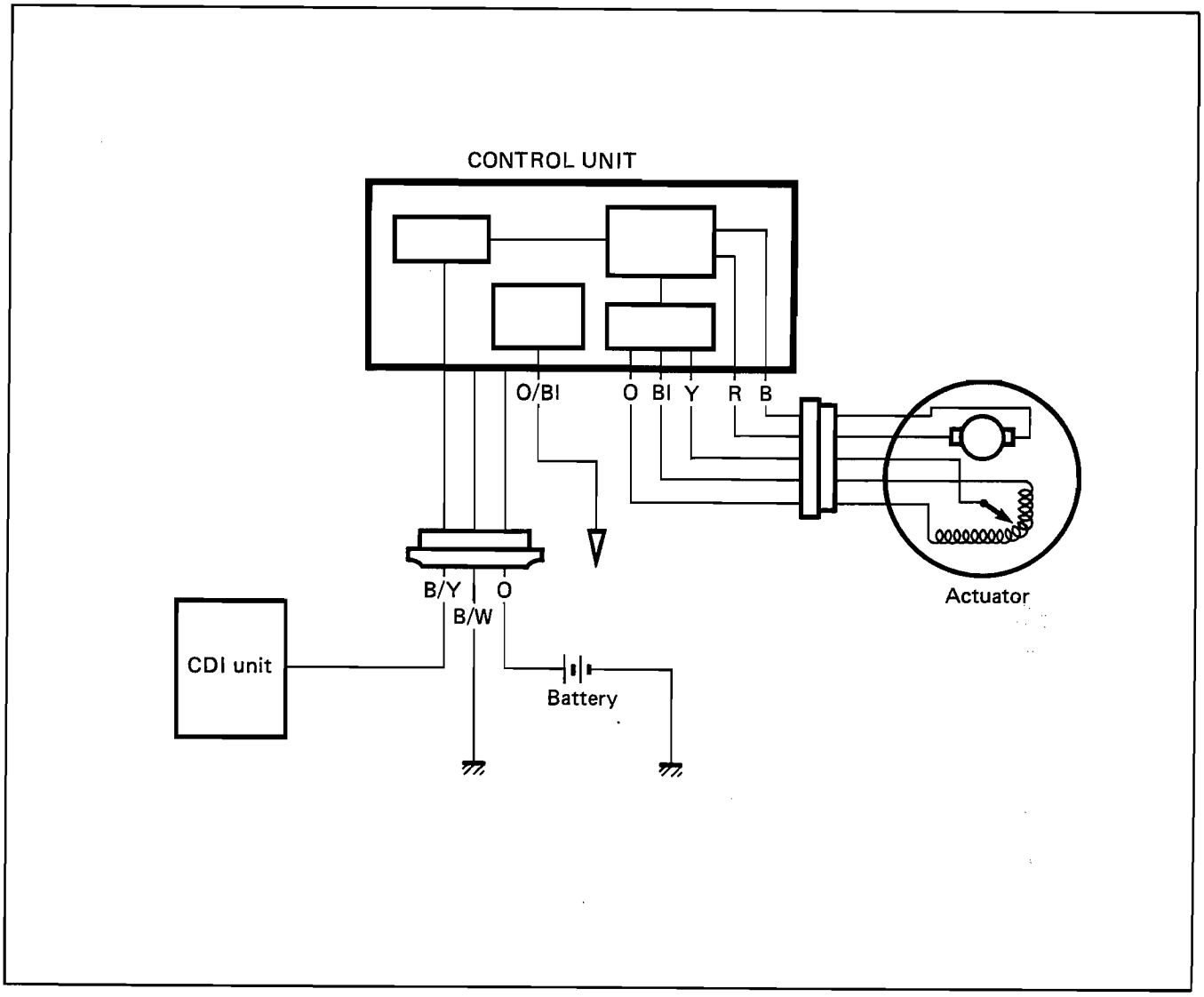

This system is designed for controlling the exhaust valve using an actuator and its controlling circuit in relations with the engine speed. The revolution detecting circuit counts the ignition primary pulse signal sent from the CDI unit and outputs a current signal to the drive operating circuit when the engine speed has reached a predetermined level. Then, the actuator is driven by the current signal supplied from the drive operating circuit. The actuator's operating angle is determined and constantly monitored by the actuator's own potentiometer which feeds back the current angle signal to the angle detecting circuit.

Downloaded from www.Manualslib.com manuals search engine

INSPECTION

EXHAUST VALVE OPERATION

- Refer to page 3-8.
- Start the engine and increase the engine r/min to check the exhaust valve operation.

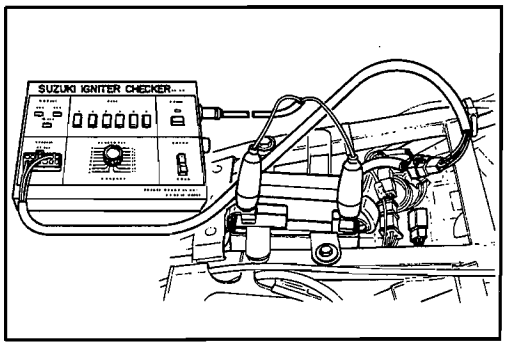

Exhaust valve	Engine r/min
Close → Open	8 000 – 8 500 r/min
Open → Close	8 500 – 8 000 r/min

- If the exhaust valve does not operate at the specified r/min, inspect the individual parts for any defect.

ACTUATOR PULLEY

- For removal procedure, refer to page 3-8.
- Check the actuator resistance values.

Tester connected to:	Resistance	Tester range
R – B	1 – 20 Ω	x 1 Ω
O – Y	4 – 6 kΩ	x k Ω

NOTE:
Do not move the pulley at the this time.

- The pulley should move within the angle range indicated by the arrow.

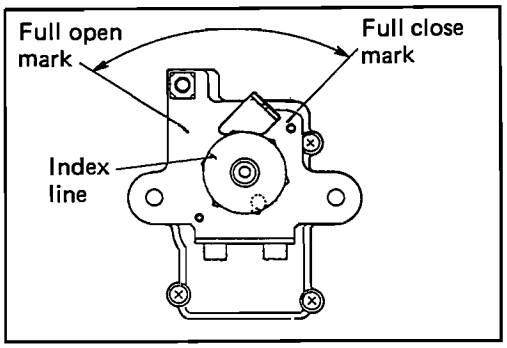

CAUTION:
Do not force the pulley in an attempt to move it beyond the angle range indicated by the arrow.

ACTUATOR CONTROL UNIT

- Refer to page 3-3.

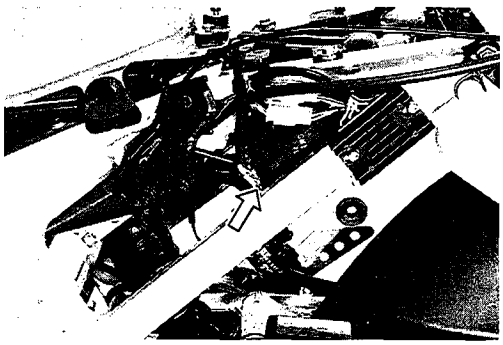

- Use a SUZUKI pocket tester (x 25 DCV) and connect the ⊕ and ⊖ probe pins to Gray and Pink leads respectively.
- Apply 12V (DC) to the Orange ⊕ and Black/White ⊖ .
- If the tester shows 8 – 12V for approx. one second, control unit is in good condition for TIMER circuit and motor driving circuit.
- Further inspection is needed.
- Using the SUZUKI pocket tester, bring the ⊕ probe and the ⊖ probe into contact with each lead wire of the control unit, check for continuity, and measure the resistance value.

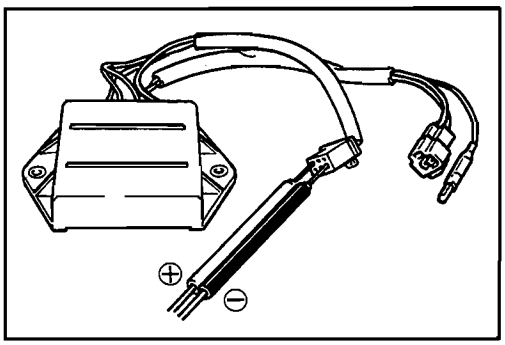

Downloaded from www.Manualslib.com manuals search engine

Unit: Approx. kΩ

		⊕ Probe of tester to:								
		B	R	Y	Bl	O	B/W	O/W	B/Y	O/Bl
⊖ Probe of tester to:	B		2 – 10	∞	∞	∞	∞	∞	∞	∞
	R	2 – 10		∞	∞	∞	∞	∞	∞	∞
	Y	50 – 500	50 – 500		50 – 500	50 – 500	50 – 500	∞	∞	∞
	Bl	1 – 10	1 – 10	50 – 500		0.1 – 5	0	∞	∞	∞
	O	1 – 10	1 – 10	50 – 500	0.1 – 5		0.1 – 5	∞	∞	∞
	B/W	1 – 10	1 – 10	50 – 500	0	0.1 – 5		∞	∞	∞
	O/W	5 – 30	5 – 30	50 – 500	5 – 30	5 – 20	5 – 20		∞	∞
	B/Y	∞	∞	∞	∞	∞	∞	∞		∞
	O/Bl	10 – 100	10 – 100	50 – 500	10 – 100	10 – 100	10 – 100	∞	∞	

- When the continuity and the resistance values are as shown in the above table, the control unit is judged to be normal.

09900-25002: SUZUKI Pocket tester

- Measure the resistance between the leads.
- Tester range – x kΩ

CAUTION:

As capacitors, diodes, etc. are used inside this unit, the resistance values will differ when an ohmmeter other than SUZUKI pocket tester is used.

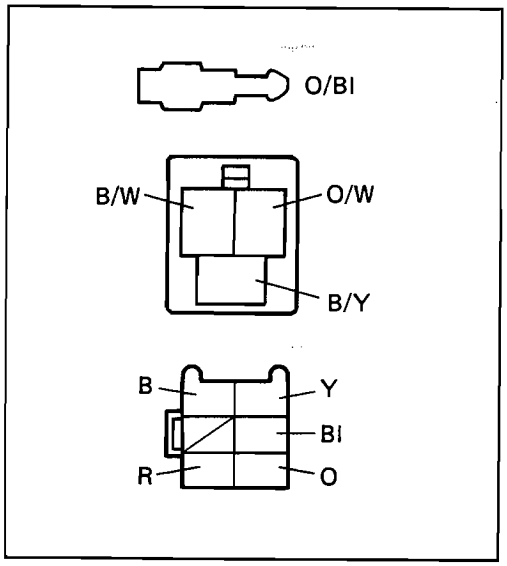

Downloaded from www.Manualslib.com manuals search engine

WATER TEMPERATURE METER

As shown in Fig. 1, four coils are located in the water Temp. meter (N_1, N_2, N_3 and N_4). As the resistance from the sending unit varies along with the coolant temperature, the current at points L_1 and L_2 will also vary. This in turn will cause the strength of the magnetic field generated in the four coils to increase or decrease (causing a related increase or decrease in the force vector H in Fig. 2) which will force the needle to move to the proper position (Fig. 3).
When the ignition switch is turned off, the pointer returns to the original position.

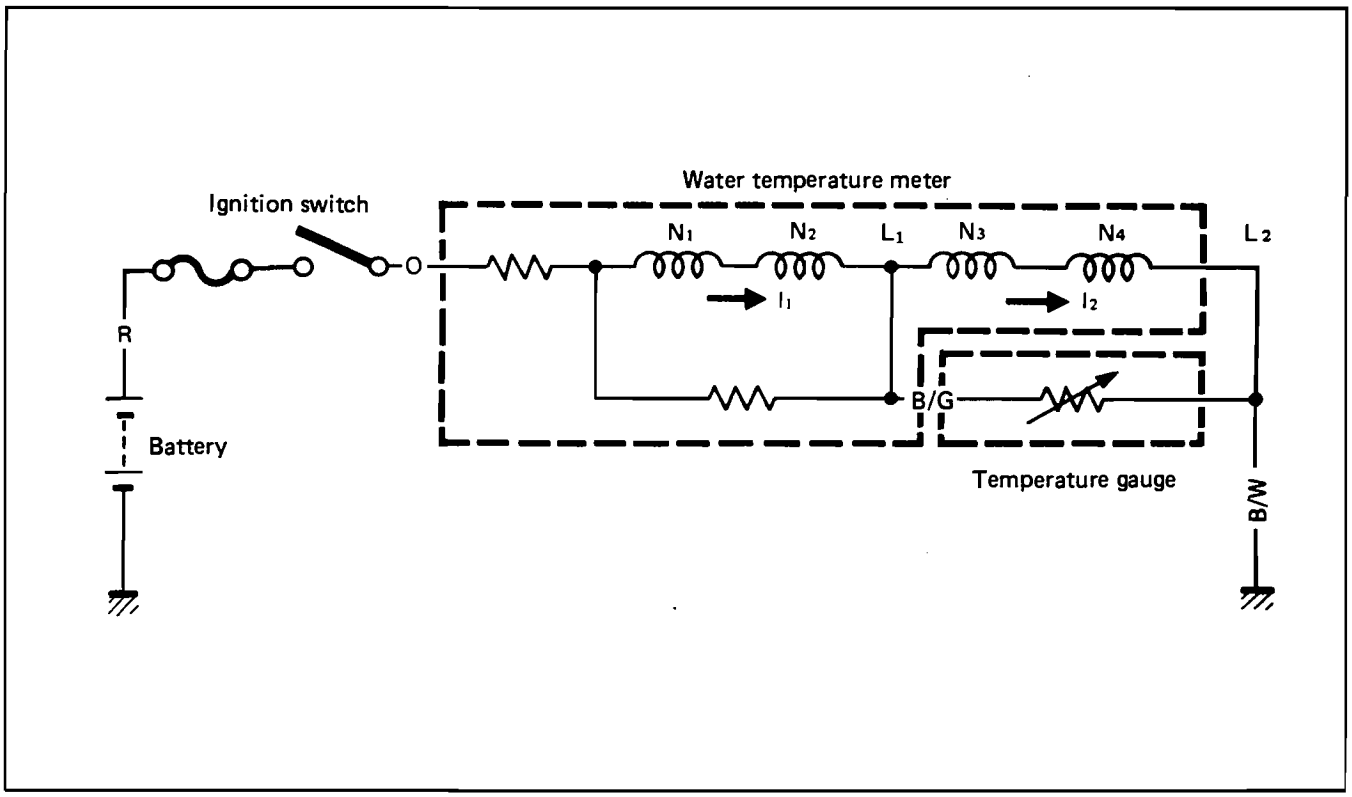

WATER TEMPERATURE METER INSPECTION

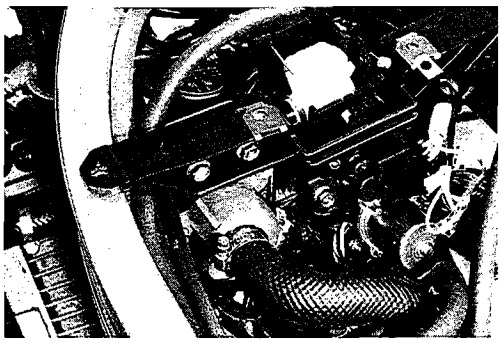

As the coil spring is installed on the needle shaft of the water temperature meter, the needle is forced back to the original position when ignition switch is turned OFF.
To test the water temperature meter, two different checks may be used. The first, and simplest test will tell if the meter is operating but will not indicate the meters accuracy throughout the range.

To perform this test, disconnect the B/G lead wire of the water temperature meter from the water temperature gauge. Connect a jumper wire between B/G wires coming from the main wiring harness and engine ground. With the ignition switch turned on, the water temperature meter should indicate "H".

Downloaded from www.Manualslib.com manuals search engine

The second test will check the accuracy of the meter in the "H" and "C" positions.

Connect a 389.3-ohm resistor between the B/G lead wire of the water temperature gauge and the ground lead wire. The water temperature gauge is normal if its pointer indicates the C position when the specified voltage is applied to the circuit and if its pointer indicates the H position when the resistor is changed to 19.2-ohms. If either one or both indications are abnormal, replace the water temperature meter with a new one.

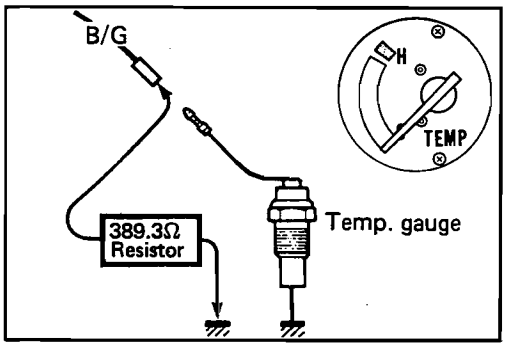

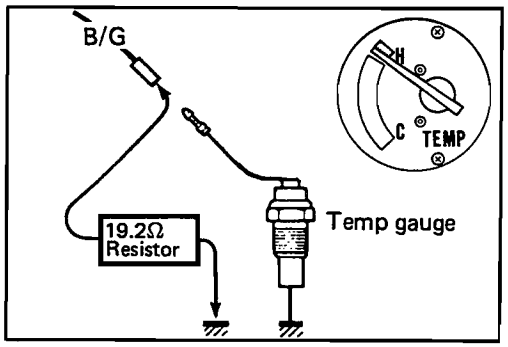

WATER TEMPERATURE METER

POSITION	TEMP	RESISTANCE
①	37°C	389.3 Ω
②	127.5°C	19.2 Ω

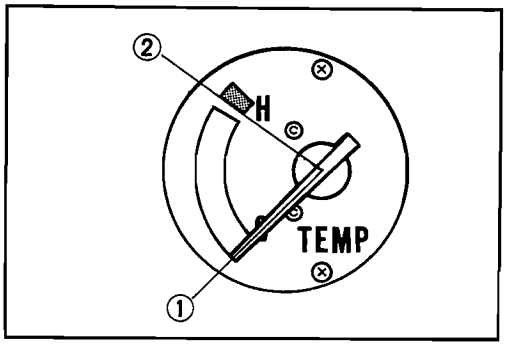

OIL LEVEL GAUGE

Check the oil level switch for continuity between Bl/W and O/R lead wires. If the tester does not show the value of 0 – 1 ohm when the switch ring is in bottom, file the contact surface or replace the unit.

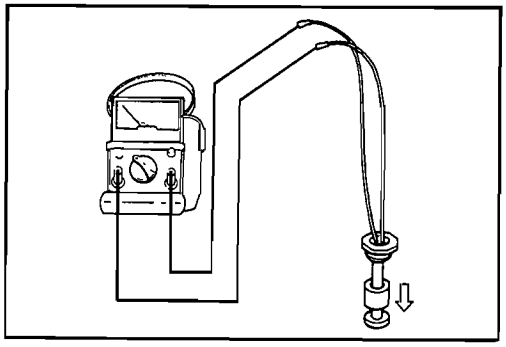

Downloaded from www.Manualslib.com manuals search engine

LAMPS

HEADLIGHT

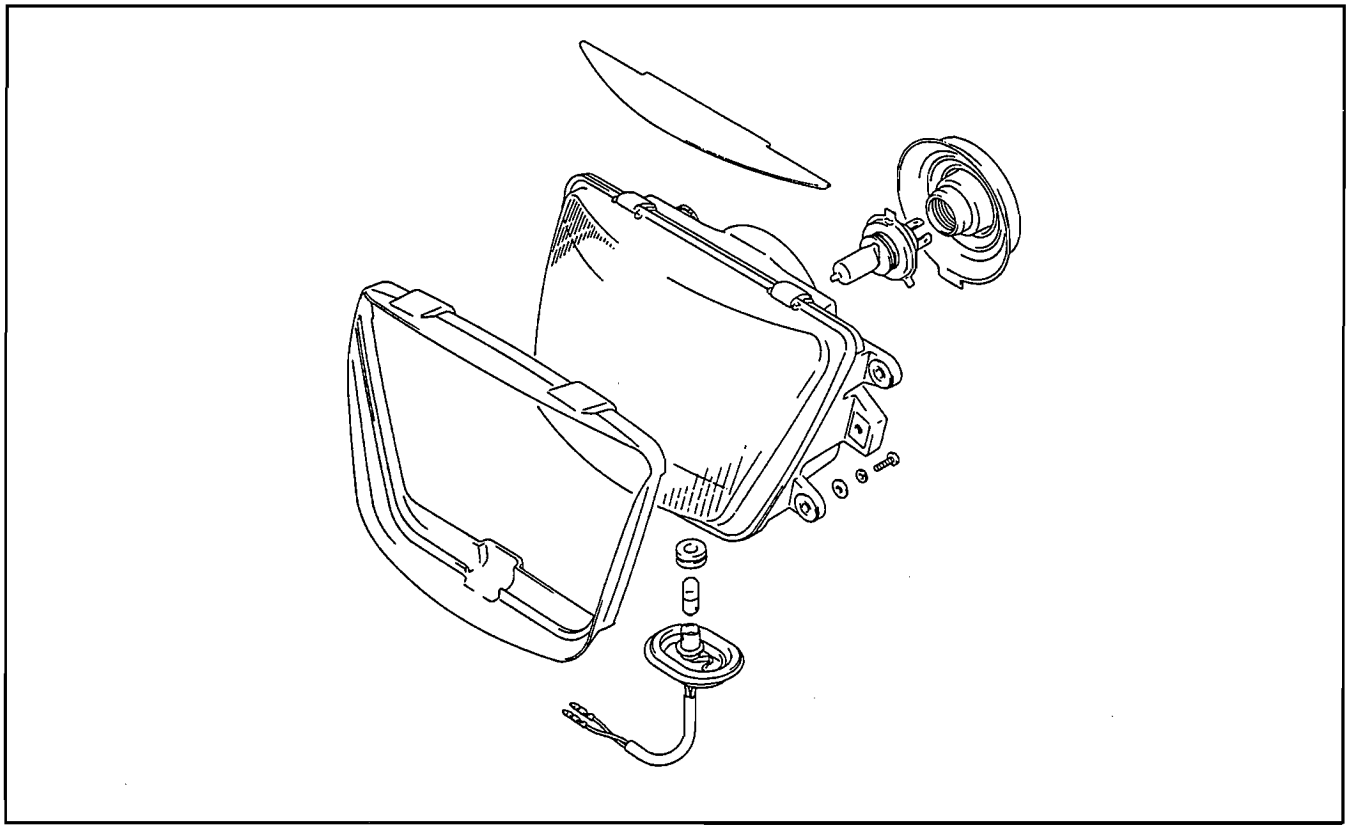

TAIL/BRAKE LIGHT

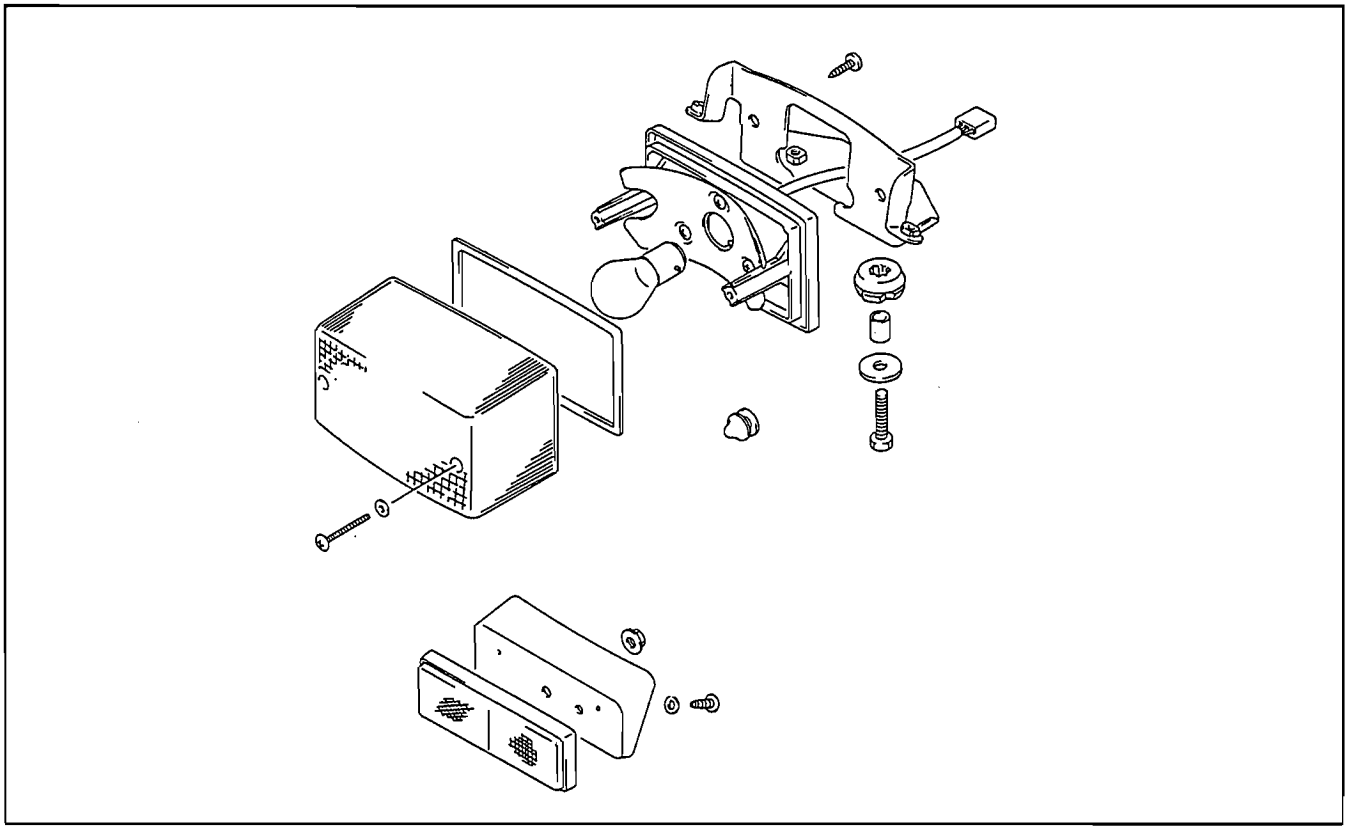

Downloaded from www.Manualslib.com manuals search engine

TURN SIGNAL LIGHT

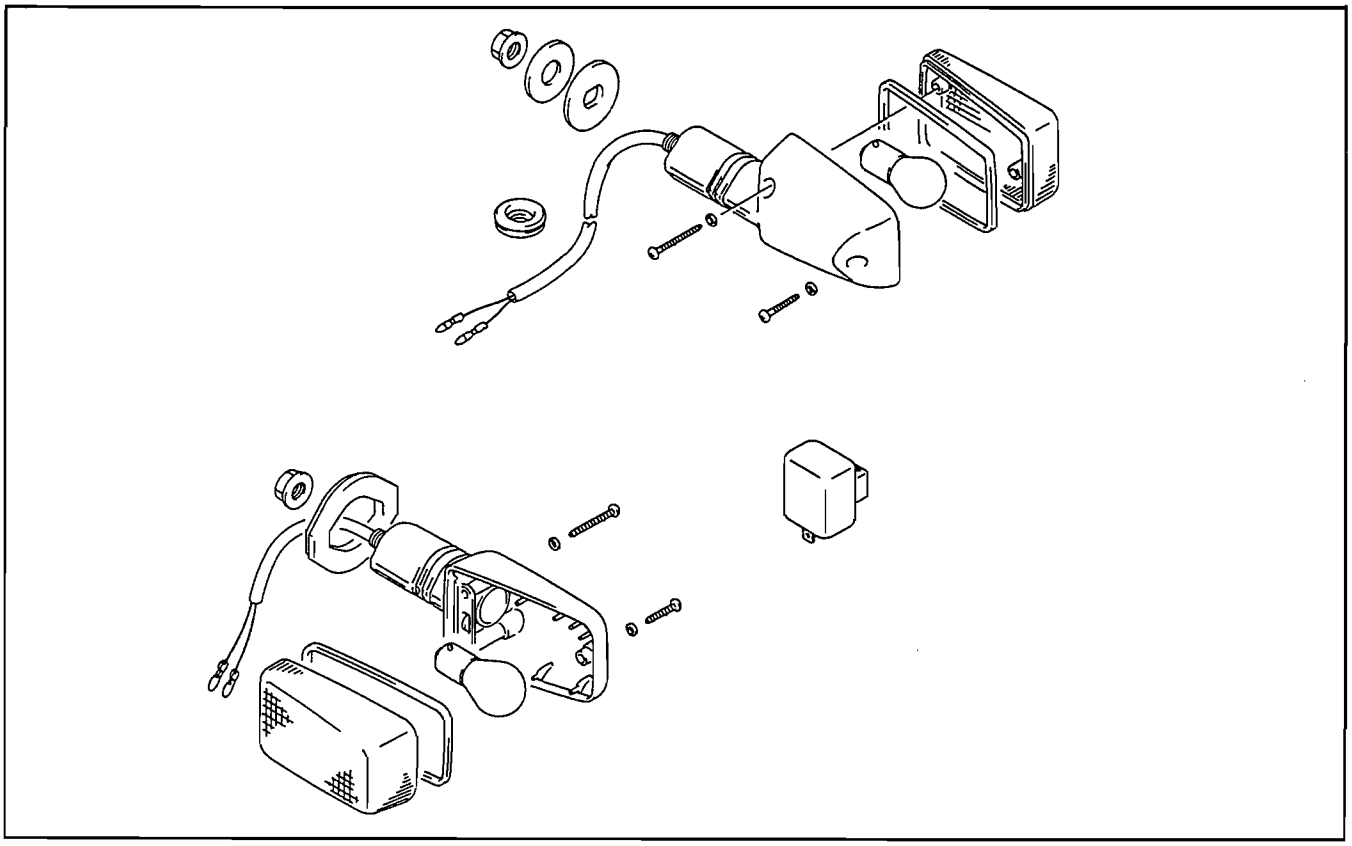

SPEEDOMETER

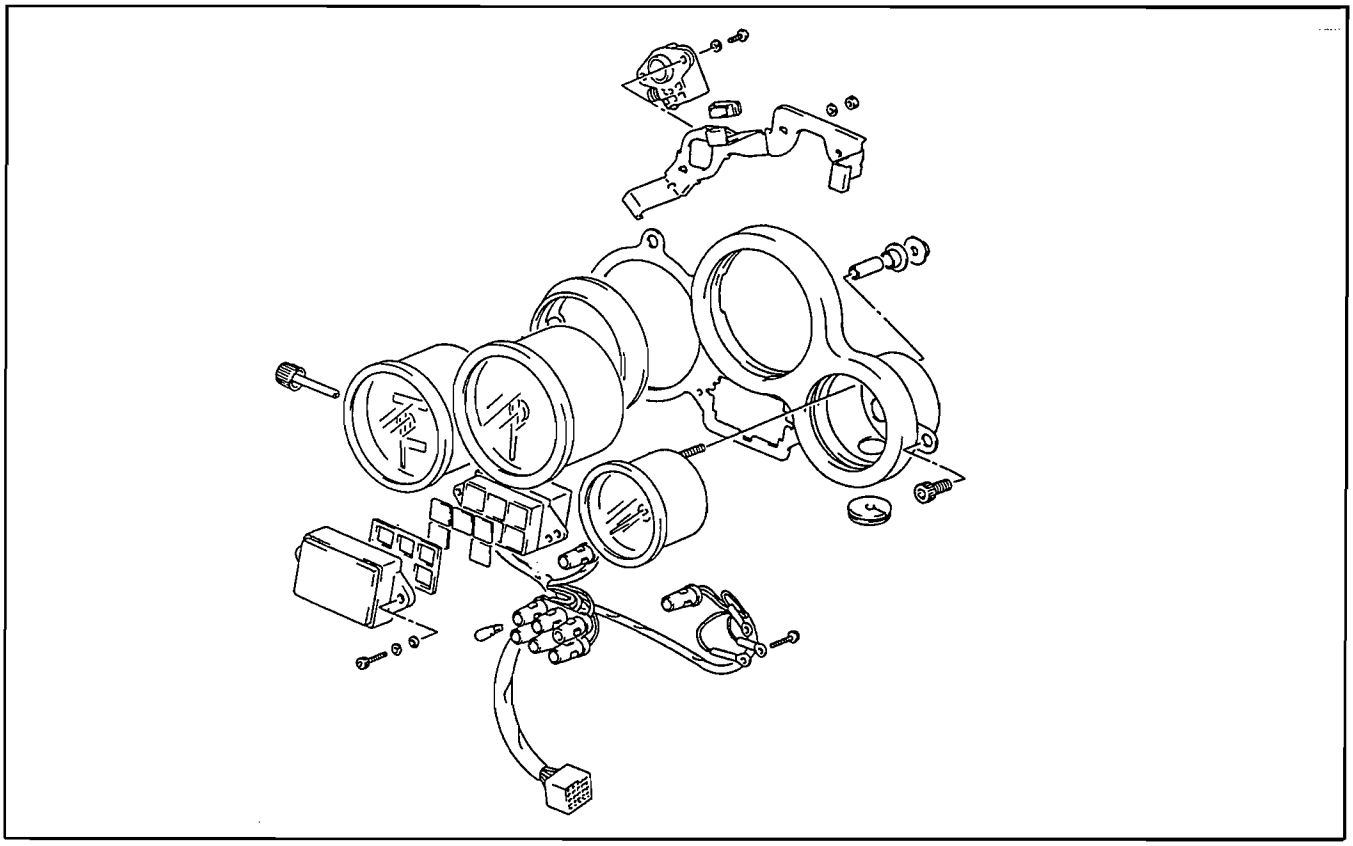

Downloaded from www.Manualslib.com manuals search engine

SPEEDOMETER WIRING INSPECTION

Using the pocket tester, check the continuity between lead wires in the following diagram.
If the continuity measured is incorrect, replace the respective parts.

09900-25002: Pocket tester

NOTE:
When making this test, it is not necessary to remove the combination meter.

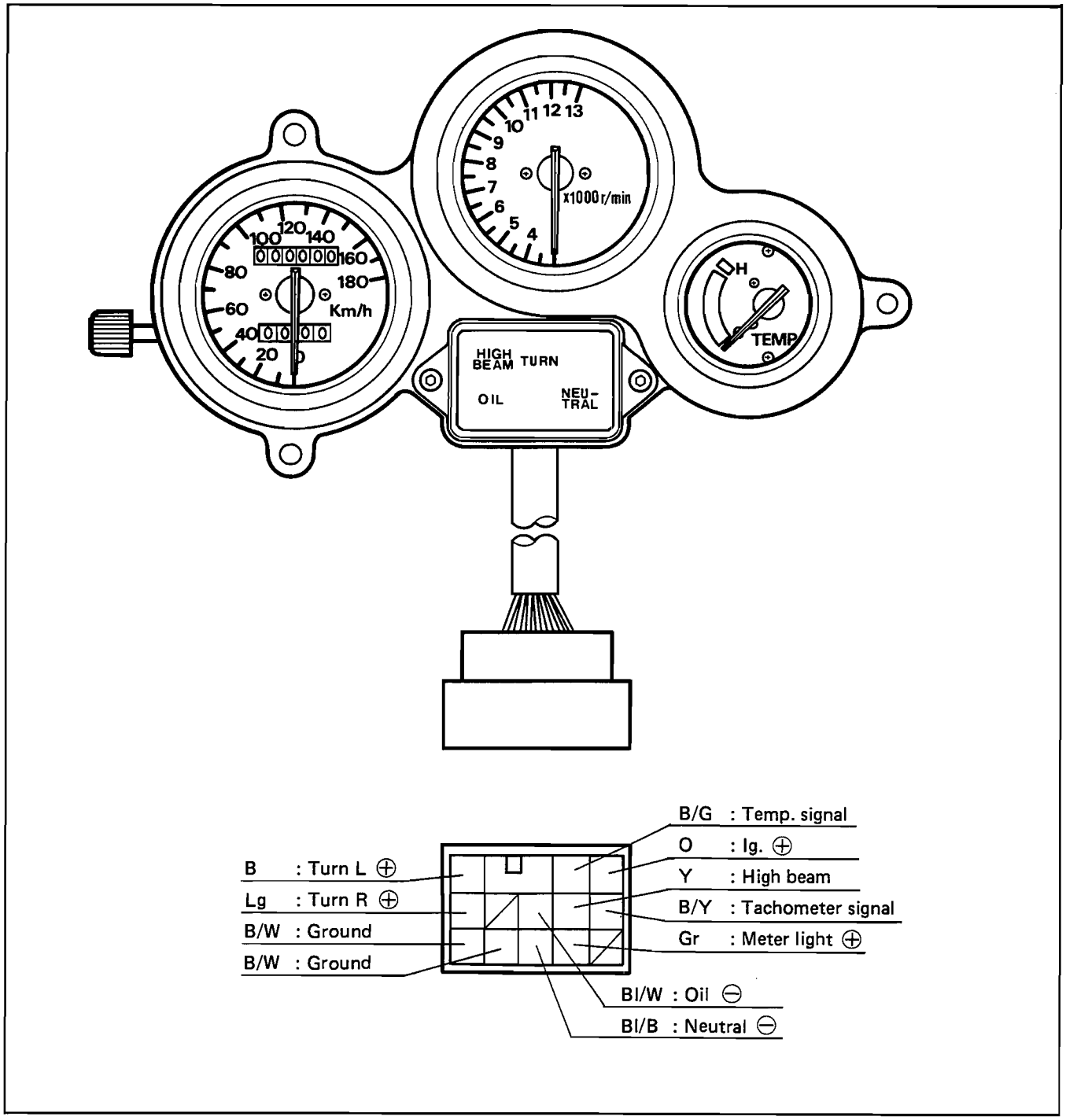

Downloaded from www.Manualslib.com manuals search engine

SWITCHES

Inspect each switch for continuity with the pocket tester referring to the chart. If any abnormality is found, replace the respective switch assemblies with new ones.

09900-25002: Pocket tester

IGNITION SWITCH

	R	O	O/R	O/Bl	Gr	Br
OFF						
C	○		○	○		
ON	○	○	○		○	○
P	○					○

LIGHTING SWITCH

	O	Gr	Y/W
OFF			
S	○	○	
ON	○	○	○

DIMMER SWITCH

	Y/W	Y	W
HI	○	○	
LO	○		○

TURN SIGNAL LIGHT

	B	Lbl	Lg
R		○	○
●			
L	○	○	

FRONT BRAKE SWITCH

	B	B
ON	○	○
OFF		

REAR BRAKE SWITCH

	B	B
ON	○	○
OFF		

NEUTRAL SWITCH

	Bl	Bl
Neutral position	○	○

PASSING SWITCH

	O/R	Y
ON (Push)	○	○
OFF		

HORN BUTTON

	G	B/W
ON (Push)	○	○
OFF		

SIDE STAND SWITCH

	G	B/W
ON (upright position)	○	○
OFF (down position)		

WIRE COLOR

B : Black
Bl : Blue
Br : Brown
Gr : Gray
Lbl : Light blue
Lg : Light green
O : Orange
R : Red
W : White
Y : Yellow
G : Green
B/R : Black with Red tracer
B/W : Black with White tracer
Bl/W : Blue with White tracer
O/R : Orange with Red tracer
Y/W : Yellow with White tracer
O/Bl : Orange with Blue tracer

Downloaded from www.Manualslib.com manuals search engine

BATTERY

SPECIFICATIONS

Type designation	YT4L-12B
Capacity	12V, 10.8kC (3 Ah)/10HR
Standard electrolyte S.G.	1.32 at 20°C (68°F)

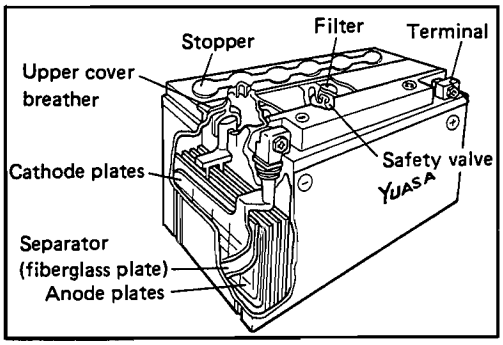

INITIAL CHARGING

Filling electrolyte

- Remove the aluminum tape sealing the battery electrolyte filler holes.

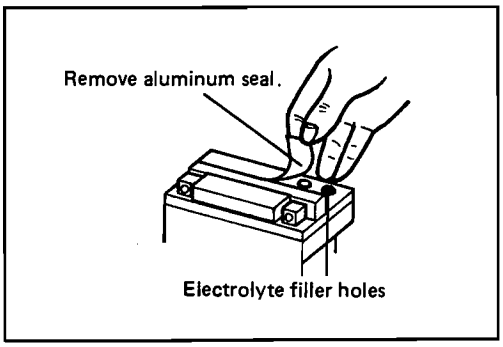

- Hold the electrolyte container with its nozzles upright, and use wire cutters, etc. to cut out off the end of the nozzles at the designated locations (between the ends and the packing).

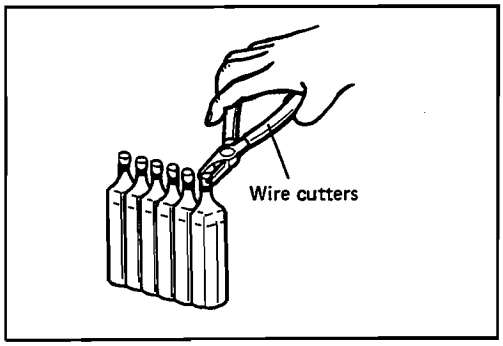

- Insert the nozzles of the electrolyte container into the battery's electrolyte filler holes, holding the container firmly so that it does not fall. Take precaution not to allow any of the fluid to spill.
- Use wire cutters to cut the protruding part on the bottom of each container, and leave in this position for about 10 minutes.
- After confirming that the electrolyte has entered the battery completely, remove the electrolyte containers from the battery. Wait for around 10 minutes.
- Insert the stoppers into the filler holes, pressing in firmly so that the top of the stoppers do not protrude above the upper surface of the battery's top cover.

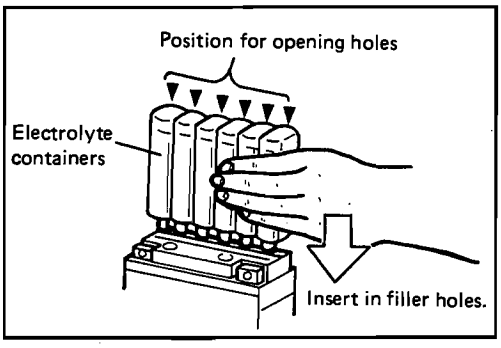

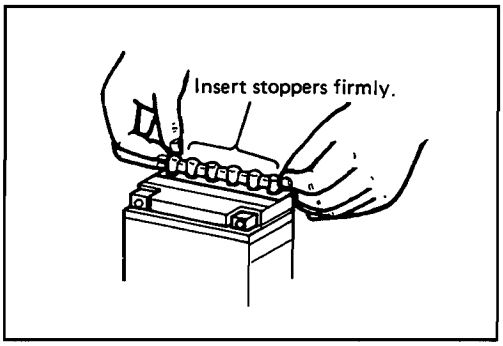

CAUTION:

* **Never use anything except the specified battery.**
* **Once the stoppers has been installed to the battery, do not remove the stoppers.**

Downloaded from www.Manualslib.com manuals search engine

- Using SUZUKI pocket tester, measure the battery voltage. The tester should indicate more than 12.5V (DC) as shown in the Fig. If the battery voltage is lower than the specification, charge the battery with a battery charger.

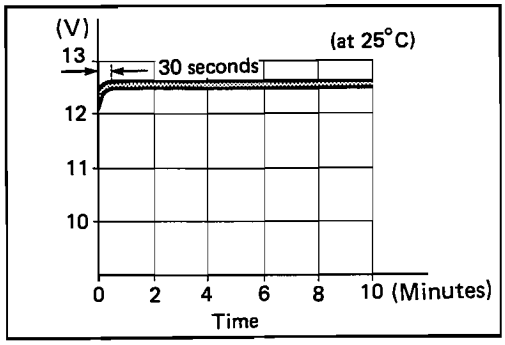

NOTE:
Initial charging for a new battery is recommended if two years have elapsed since the date of manufacture.

SERVICING

Visually inspect the surface of the battery container. If any signs of cracking or electrolyte leakage from the sides of the battery have occurred, replace the battery with a new one.
If the battery terminals are found to be coated with rust or an acidic white powdery substance, then this can be cleaned away with sandpaper.

RECHARGING OPERATION

- Using the pocket tester, check the battery voltage. If the voltage reading is less than the 12.0V (DC), recharge the battery with a battery charger.

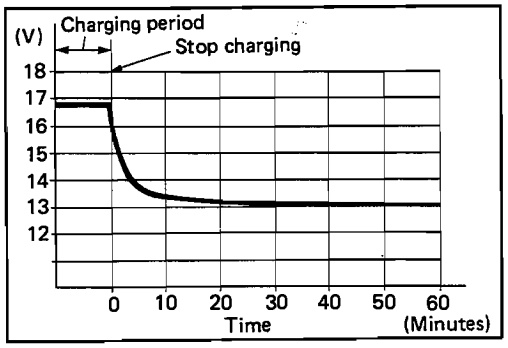

CAUTION:
When recharging the battery remove the battery from the motorcycle.

NOTE:
Do not remove the stoppers on the battery top while recharging.

Recharging time: 3A for half hour or 0.3A for 5 hours

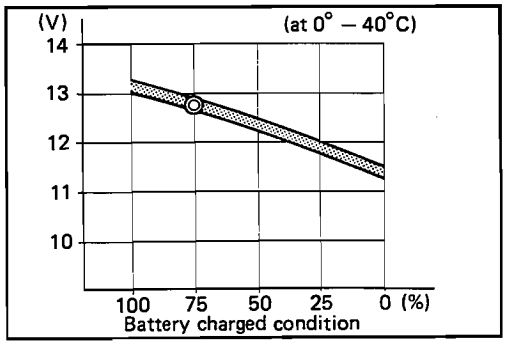

CAUTION:
Be careful not to permit the charging current to exceed 3A at any time.

- After recharging, wait for more than 30 minutes and check the battery voltage with a pocket tester.
- If the battery voltage is less than the 12.5V, recharge the battery again.
- If battery voltage is still less than 12.5V after recharging, replace the battery with a new one.
- When a battery is left for a long term without using, it is subject to discharge. When the motorcycle is not used for more than 1 month (especially during the winter season), recharge the battery once a month at least.

Downloaded from www.Manualslib.com manuals search engine

Downloaded from www.Manualslib.com manuals search engine

CHASSIS

CONTENTS

FAIRING 7- 1
FRONT WHEEL 7- 3
FRONT BRAKE 7- 7
FRONT FORK 7-13
STEERING STEM 7-18
REAR BRAKE 7-23
REAR WHEEL 7-28
TIRE AND WHEEL 7-33
REAR SUSPENSION 7-38

Downloaded from www.Manualslib.com manuals search engine

FAIRING

CONSTRUCTION

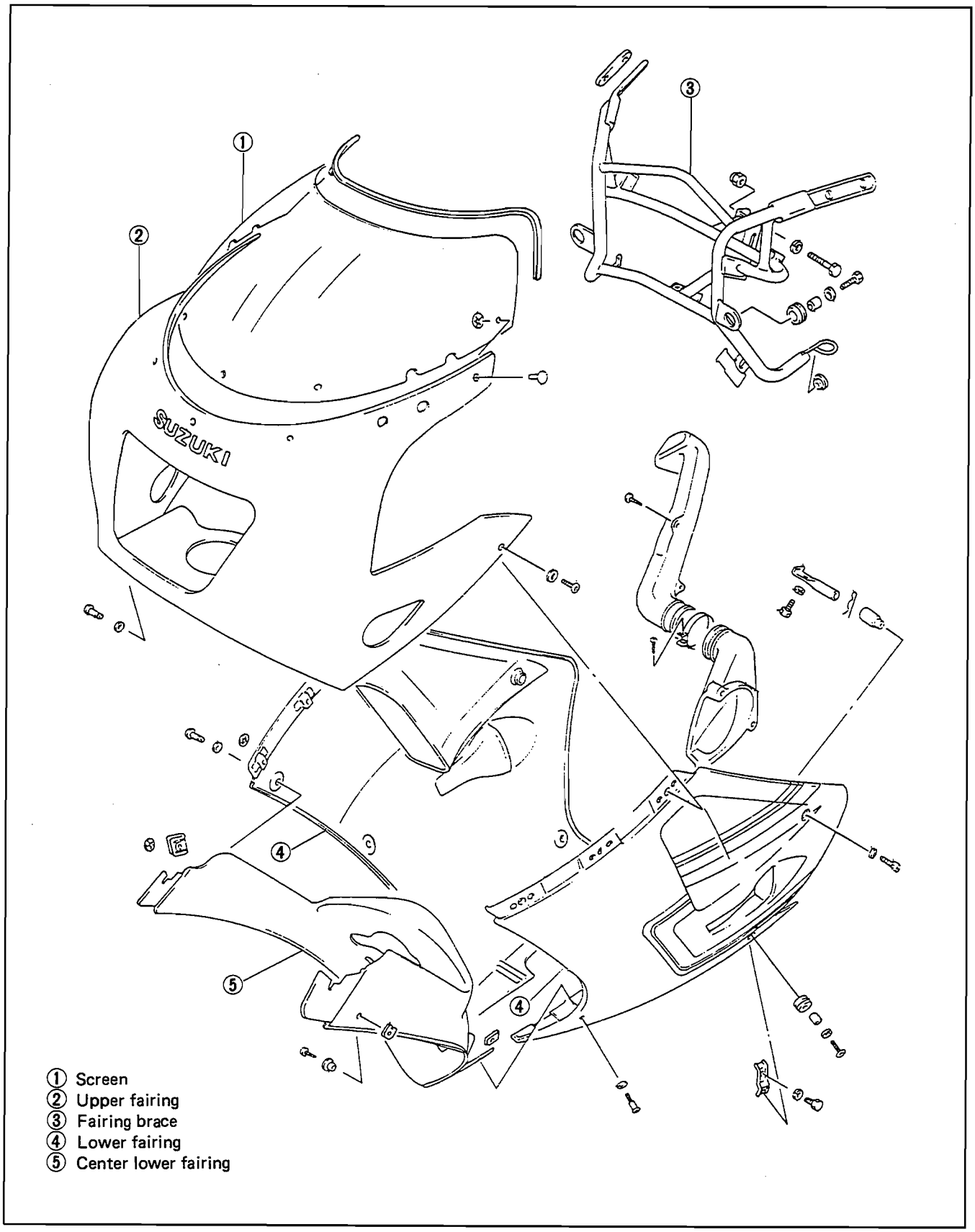

Downloaded from www.Manualslib.com manuals search engine

REMOVAL

- Loosen screws ① and two clips ② to remove the lower fairing.

09900-00401: L-type hexagon wrench set

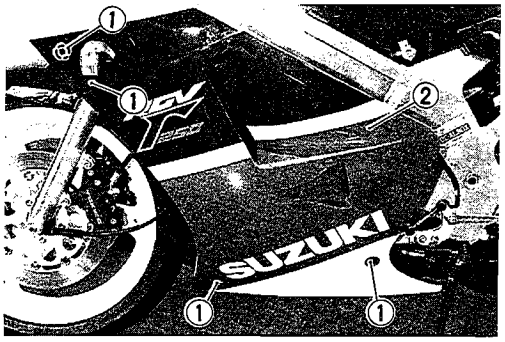

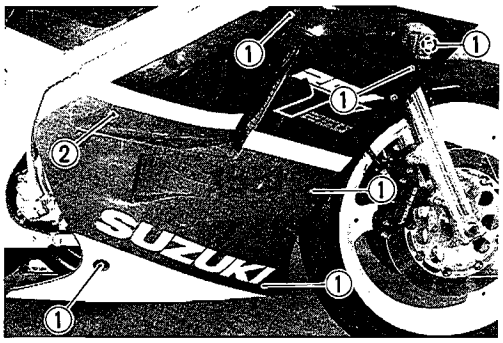

- Remove the speedometer cable.
- For the left side lower fairing, pull out the speedometer cable from the cable guides.

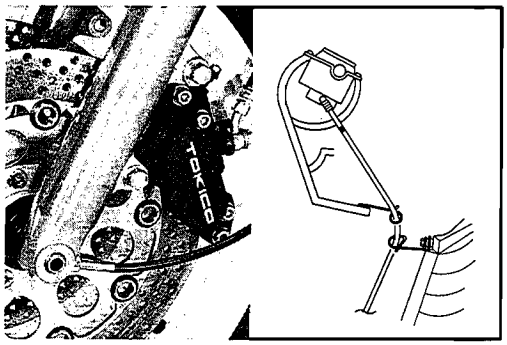

- Remove the right and left rear view mirrors by loosening respective two nuts.

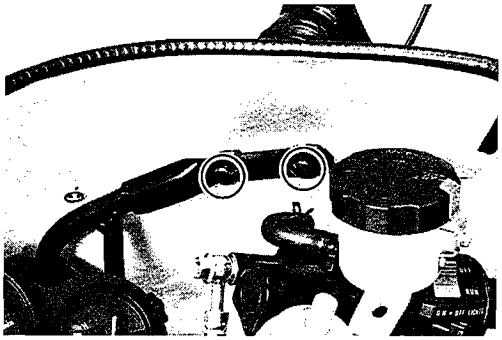

- Disconnect the lead wires for right and left turn signals.

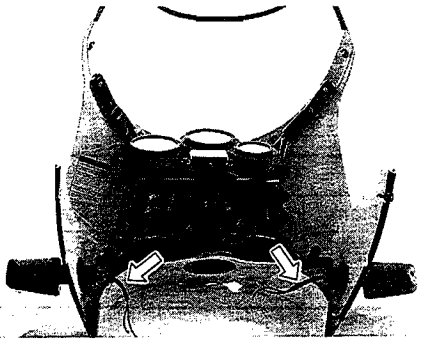

Downloaded from www.Manualslib.com manuals search engine

- Remove the upper fairing by loosening two bolts.

09900-00401: L-type hexagon wrench set

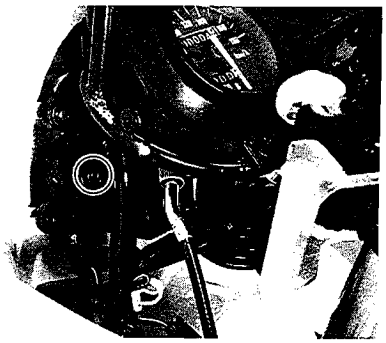

REMOUNTING

Remount the fairing in the reverse order of removal.

FRONT WHEEL

CONSTRUCTION

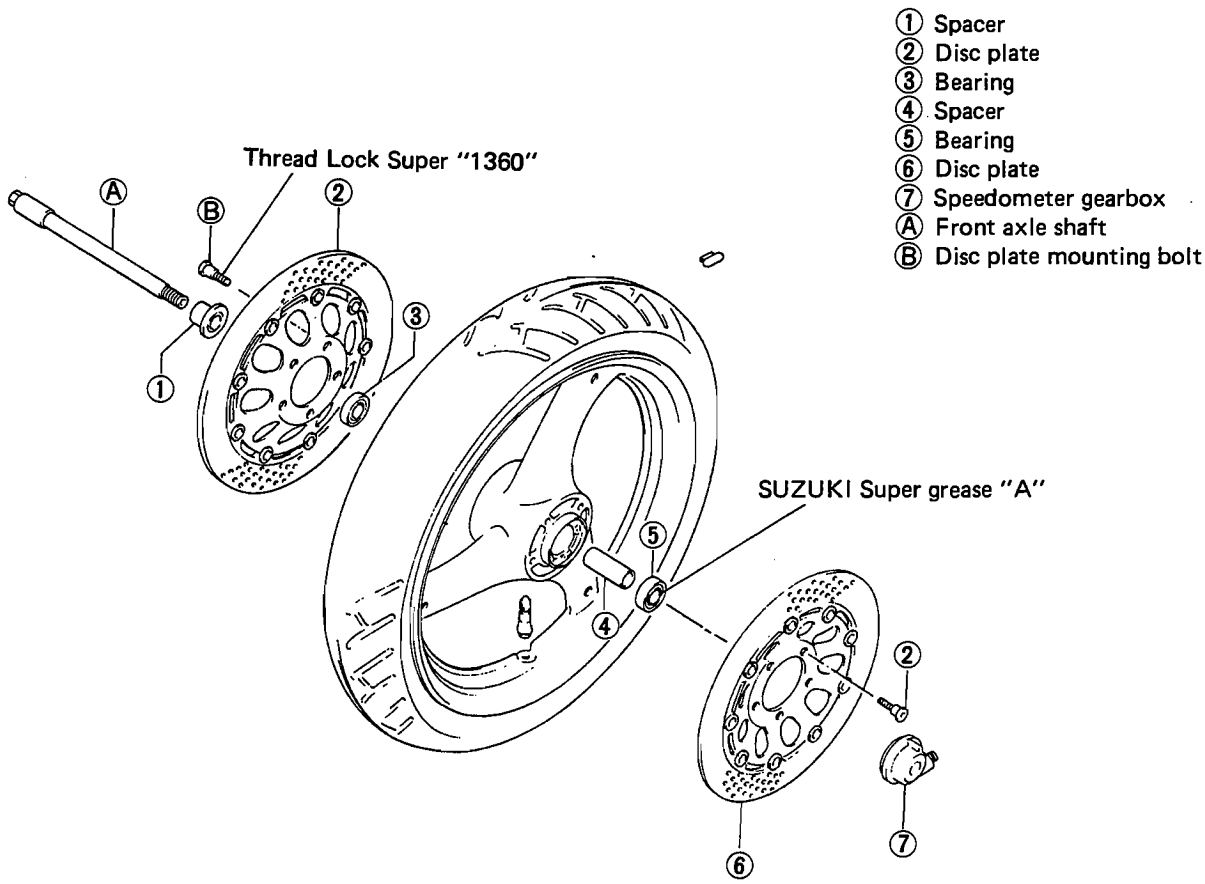

Tightening torque		
Item	N·m	kg-m
Ⓐ	50 – 80	5.0 – 8.0
Ⓑ	15 – 25	1.5 – 2.5

Downloaded from www.Manualslib.com manuals search engine

REMOVAL AND DISASSEMBLY

- Remove the lower fairing. (Refer to page 7-1.)
- Support the motorcycle by jake with wooden block.

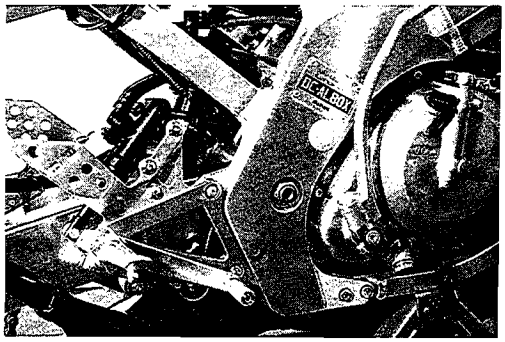

- Remove the right and left calipers by loosening caliper mounting bolts.

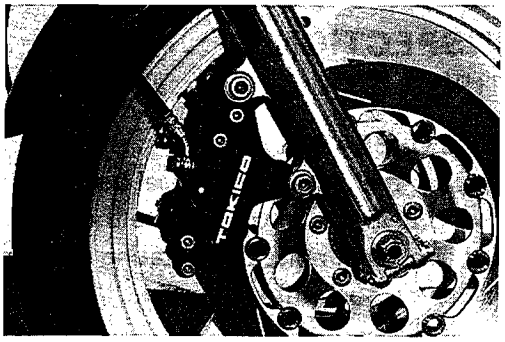

- Loosen the axle clamp bolts.
- Loosen the axle shaft.
- Draw out the axle shaft and take off the front wheel.

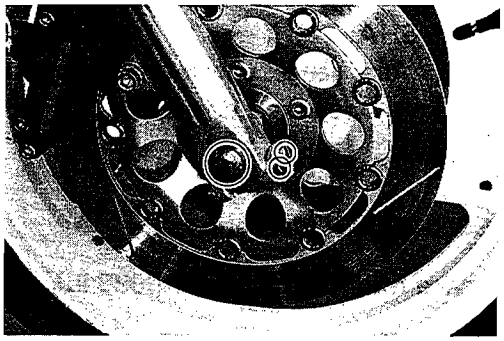

- Remove the securing bolts and separate both the discs from the wheel.

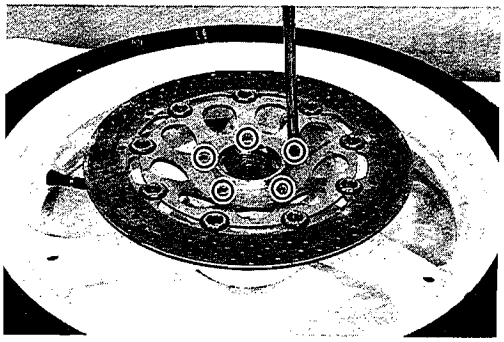

- Drive out both the wheel bearings with the special tool in the following procedures.

09941-50110: Bearing remover

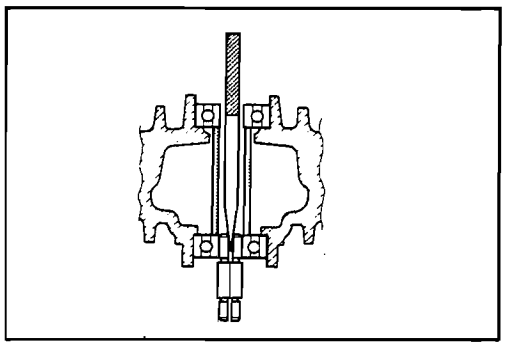

Downloaded from www.Manualslib.com manuals search engine

- Insert the adapter into the wheel bearing.
- After inserting the wedge bar from the opposite side, lock the wedge bar in the slit of the adapter.
- Drive out the wheel bearing by knocking the wedge bar.

CAUTION:
The removed bearing should be replaced.

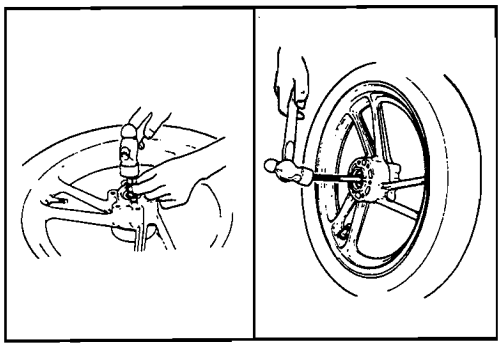

INSPECTION

TIRE ..... Refer to page 7-33

WHEEL BEARINGS

Inspect the play of the wheel bearings inner ring by hand while fixing it in the wheel. Rotate the inner ring by hand to inspect for abnormal noise and rotating smoothly. Replace the bearing if there is something unusual.

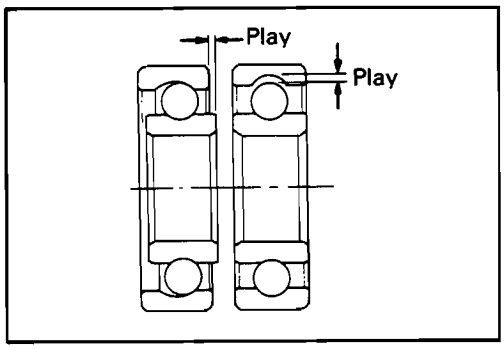

AXLE SHAFT

Using a dial gauge, check the axle shaft for runout and replace it if the runout exceeds the limit.

09900-20606: Dial gauge (1/100)

09900-20701: Magnetic stand

Service Limit: 0.25 mm (0.0098 in)

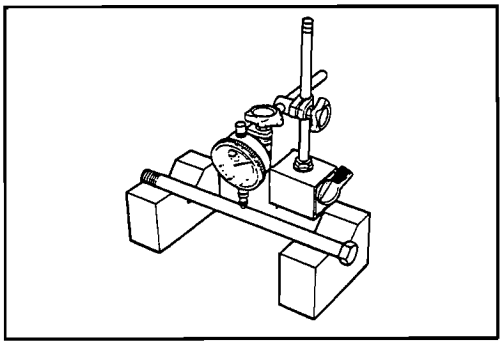

WHEEL

Make sure that the wheel runout checked as shown does not exceed the service limit. An excessive runout is usually due to worn or loose wheel bearings and can be reduced by replacing the bearings. If bearing replacement fails to reduce the runout, replace the wheel.

Service Limit (Axial and Radial): 2.0 mm (0.0787 in)

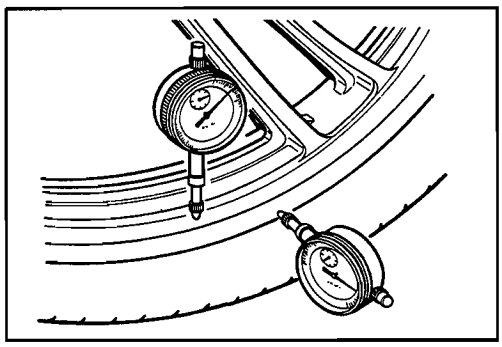

REASSEMBLY AND REMOUNTING

Reassemble and remount the front wheel in the reverse order of removal and disassembly, and also carry out the following steps:

WHEEL BEARING

- Apply grease to the bearings before installing.

99000-25010: SUZUKI Super grease "A"

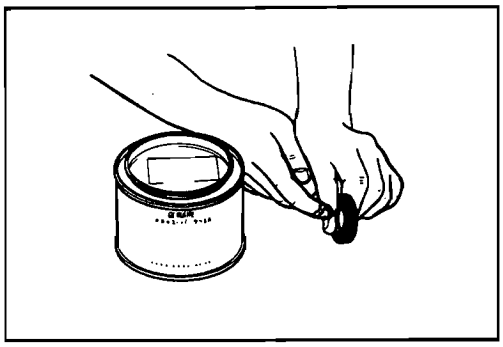

Downloaded from www.Manualslib.com manuals search engine

- Install the wheel bearings as follows with the special tool.

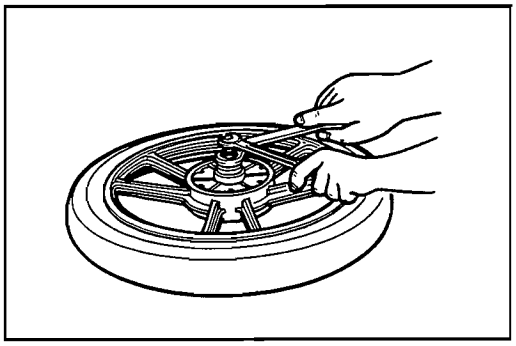

CAUTION:
First install the wheel bearing for right side.

09941-34511: Bearing installer set

09924-84510: Bearing installer set

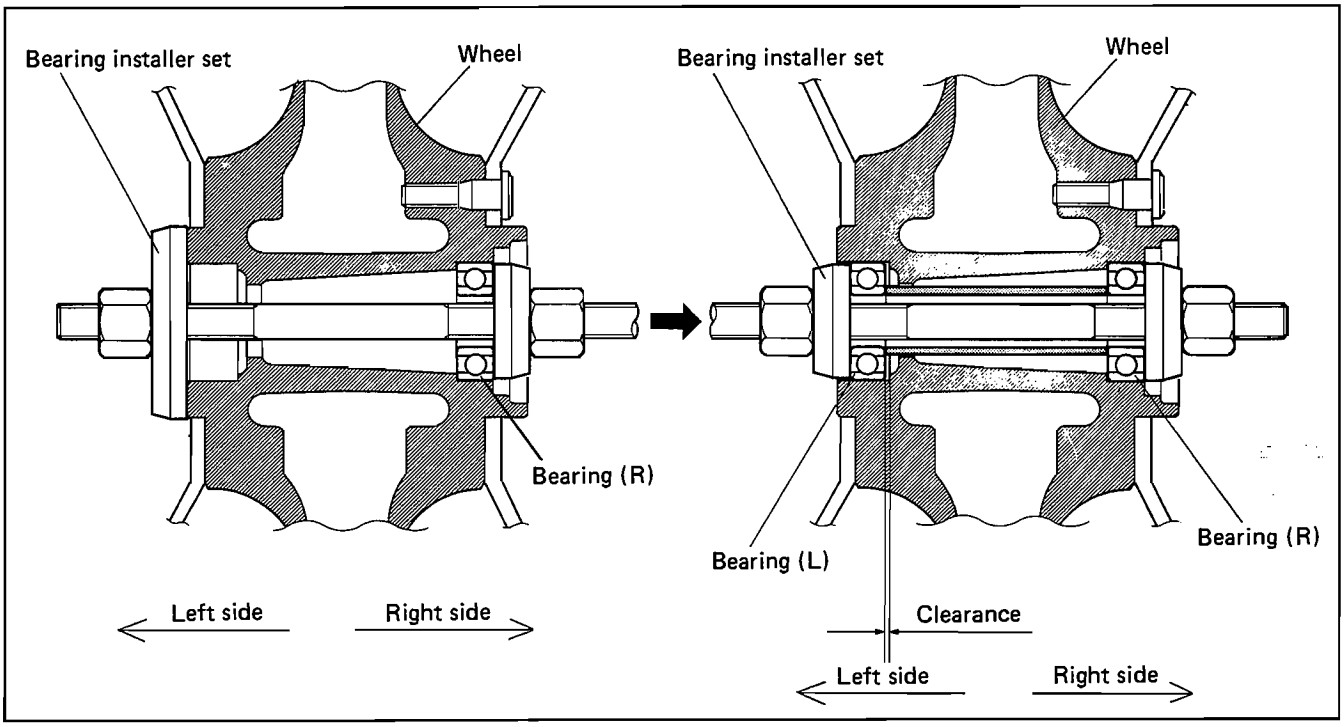

DISC

NOTE:

Mount the disc plate with a marking "R" on the right side and that with "L" on the left side.

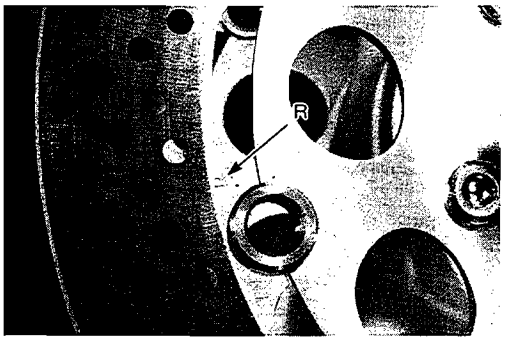

SPEEDOMETER GEARBOX

- Before installing the speedometer gearbox, grease it.
- When installing the speedometer gearbox to the wheel hub, be sure to align the four cutaway portions ① on the wheel hub with the four tabs ② of the speedometer gear.
- Before tightening the axle shaft, make sure to locate the speedometer gear box properly with its stopper tab in contact with the fork leg as shown. Tighten the axle shaft to specification.

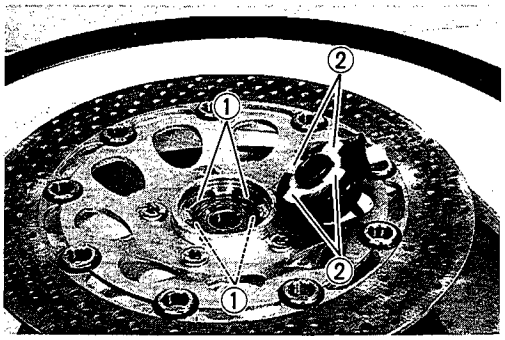

Downloaded from www.Manualslib.com manuals search engine

NOTE:
Check to be sure that the speedometer gearbox is in suitable position without cable bending when tightening the axle shaft.

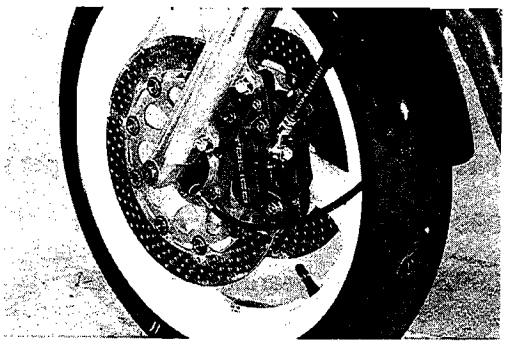

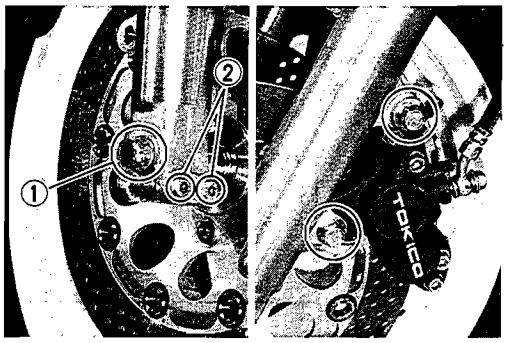

AXLE SHAFT
- Tighten the axle shaft ① and axle shaft pinch bolts ② .

BRAKE CALIPER
- Tighten the brake caliper mounting bolts.

FRONT BRAKE

CONSTRUCTION (MASTER CYLINDER AND CALIPER)

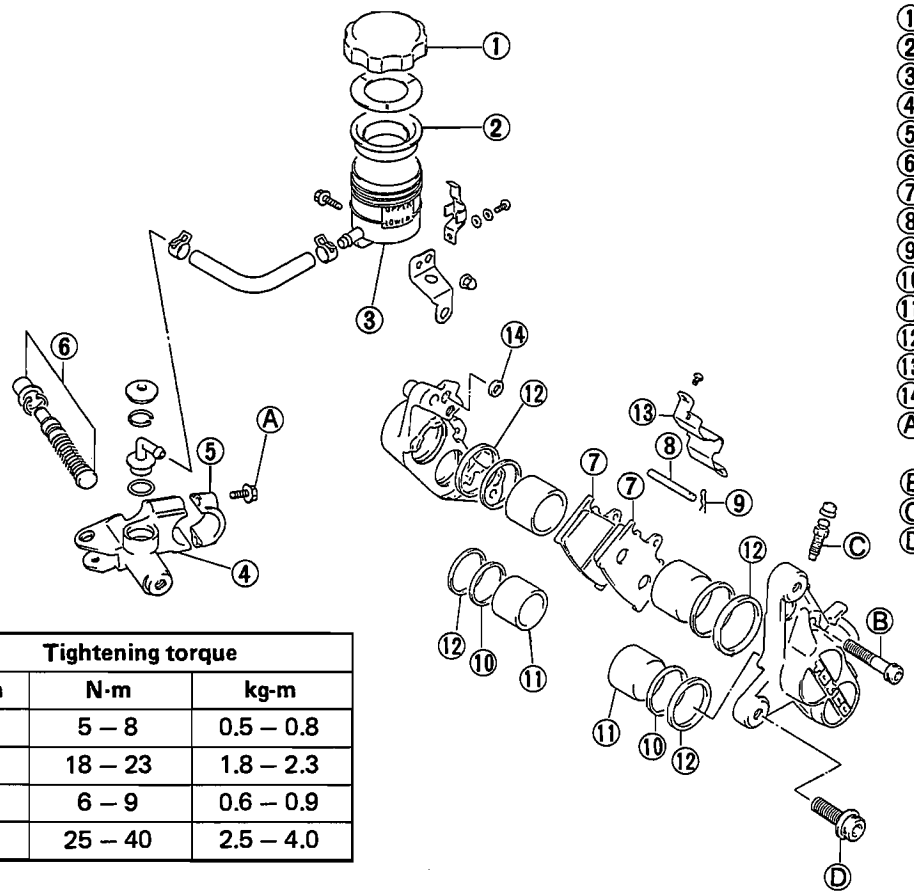

① Reservoir cap
② Diaphragm
③ Reservoir tank
④ Master cylinder
⑤ Master cylinder holder
⑥ Cup set
⑦ Pad set
⑧ Pin
⑨ Clip
⑩ Seal
⑪ Piston
⑫ Piston seal
⑬ Dust cover
⑭ O-ring
Ⓐ Master cylinder mounting bolt
Ⓑ Caliper housing bolt
Ⓒ Air bleeder
Ⓓ Caliper mounting bolt

Tightening torque		
Item	N·m	kg·m
Ⓐ	5 – 8	0.5 – 0.8
Ⓑ	18 – 23	1.8 – 2.3
Ⓒ	6 – 9	0.6 – 0.9
Ⓓ	25 – 40	2.5 – 4.0

Downloaded from www.Manualslib.com manuals search engine

BRAKE PAD REPLACEMENT

- Remove the dust cover.
- Remove the clips ① draw out the pins ②.
- Take off the pads.

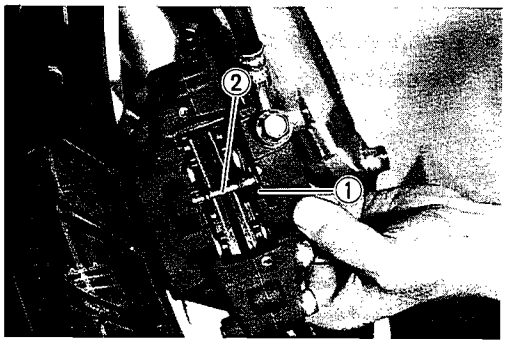

CAUTION:

*** Do not operate the brake lever while dismounting the pads.**

*** Replace the brake pad as a set, otherwise braking performance will be adversely affected.**

CALIPER REMOVAL AND DISASSEMBLY

- Disconnect the brake hose and catch the brake fluid in a suitable receptacle.

CAUTION:

Never re-use the brake fluid left over from servicing and stored for long periods.

WARNING:

Brake fluid, if it leaks, will interfere with safe running and discolor painted surfaces. Check the brake hose for cracks and hose joint for leakage before riding.

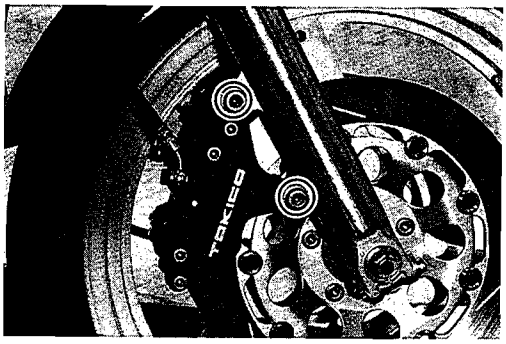

- Remove the two caliper mounting bolts and take off the caliper.

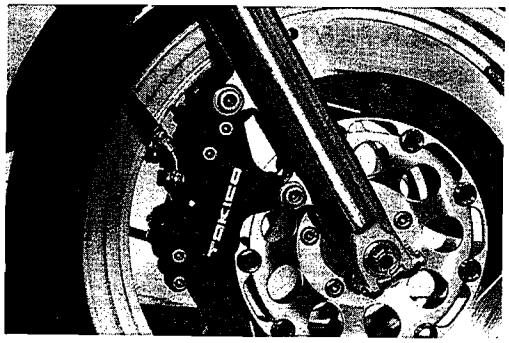

NOTE:

Slightly loosen the caliper housing bolts to facilitate latter disassembly before removing the caliper mounting bolts.

- Remove the pads.
- Separate the caliper by removing the caliper housing bolts.
- Remove the seals ③.

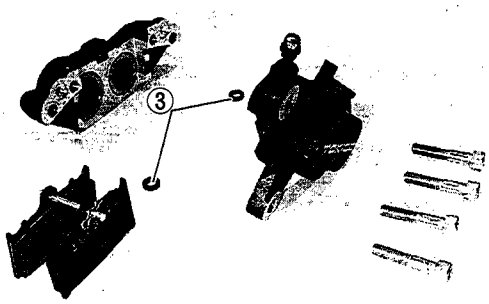

NOTE:

Once the caliper halves have been separated, replace the O-ring.

- Push out the piston with an air gun.

CAUTION:

Do not use high pressure air to prevent piston damage.

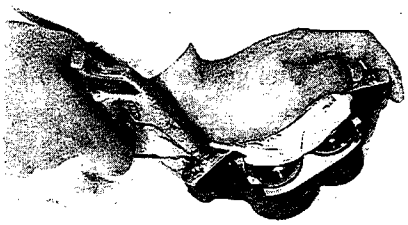

Downloaded from www.Manualslib.com manuals search engine

- Remove the pistons ①, seals ② and piston seals ③ from the caliper.

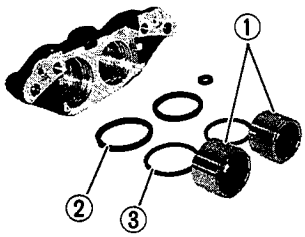

CALIPER AND DISC INSPECTION

CYLINDER AND PISTON

Inspect the caliper bore wall for nicks, scratches or other damage and the piston surface for any scratches or other damage.

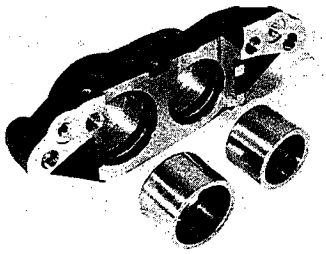

RUBBER PART

Inspect each rubber part for damage and wear.

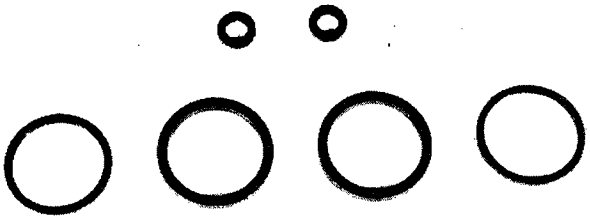

DISC

Using a micrometer check the disc for wear. Its thickness can be checked with disc and wheel in place. The service limit for the thickness of the disc is shown below.

09900-20205: Micrometer (0 – 25 mm)

Service Limit (Front disc): 4.0 mm (0.13 in)

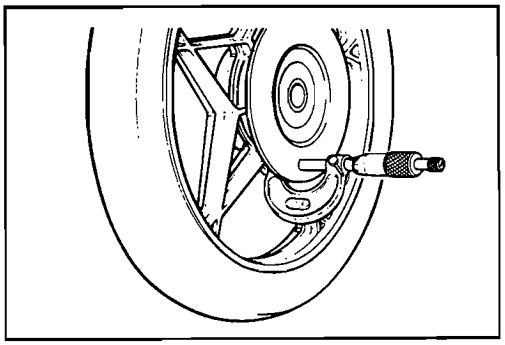

With the disc mounted on the wheel, check the disc for face runout with a dial gauge, as shown.

09900-20606: Dial gauge (1/100 mm)

09900-20701: Magnetic stand

Service Limit: 0.30 mm (0.01 in)

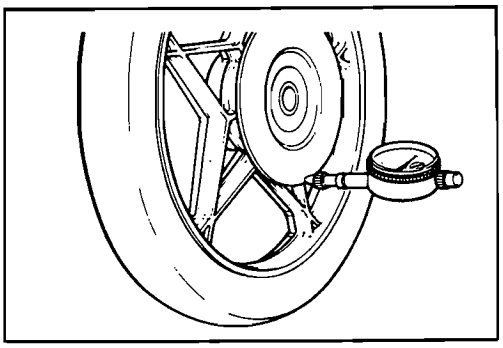

Downloaded from www.Manualslib.com manuals search engine

CALIPER REASSEMBLY AND REMOUNTING

Reassemble and remount the caliper in the reverse orders of removal and disassembly and carry out the following steps.

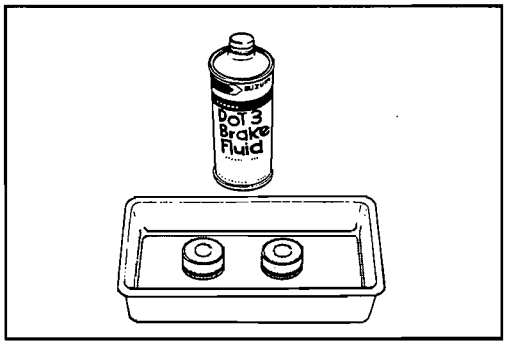

CAUTION:

* **Wash the caliper components with fresh brake fluid before reassembly.**
* **Never use cleaning solvent or gasoline to wash them.**
* **Apply brake fluid to the caliper bore and piston to be inserted into the bore.**

CAUTION:

Bleed the air after reassembling the caliper. (Refer to page 2-13.)

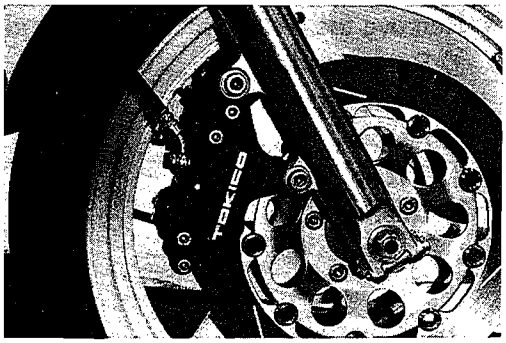

MASTER CYLINDER REMOVAL AND DISASSEMBLY

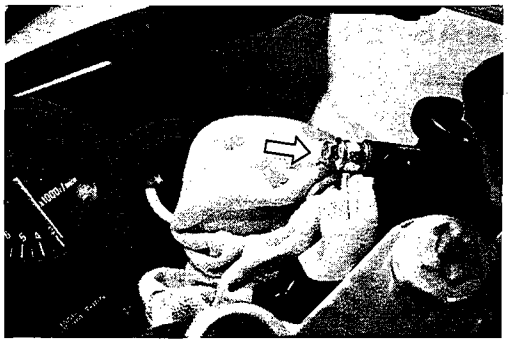

- Place a rag underneath the union bolt on the master cylinder to catch the spilled drops of brake fluid. Unscrew the union bolt and disconnect the brake hose/master cylinder joint.

CAUTION:

Completely wipe off any brake fluid adhering to any part of motorcycle. The fluid reacts chemically with paint, plastics, rubber materials, etc.

- Remove the holder bolts and take off the master cylinder assembly.
- Remove the brake lever by loosening a bolt.

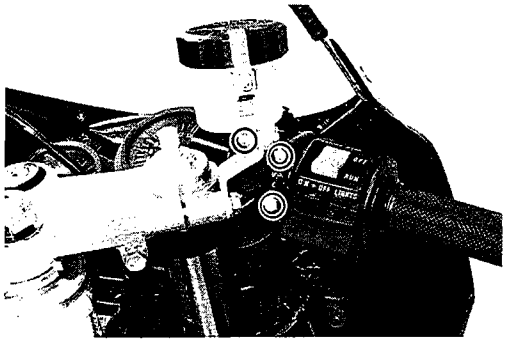

- Remove the reservoir hose, dust seal, circlip and O-ring.

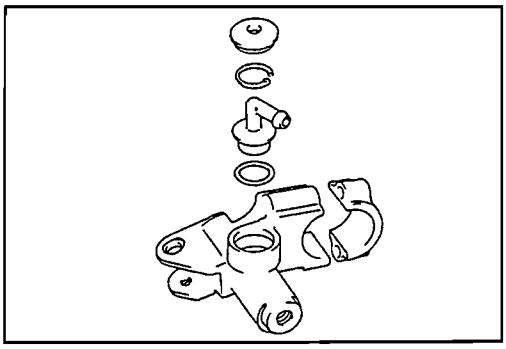

Downloaded from www.Manualslib.com manuals search engine

- Pull out the dust boot and then remove the circlip with the special tool.

09900-06108: Snap ring pliers

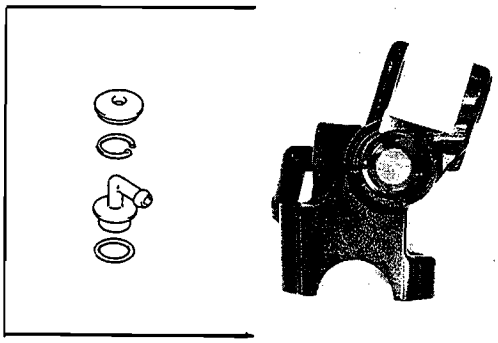

- Remove the piston, primary cup and return spring.
  ① Return spring
  ② Primary cup
  ③ Piston
  ④ Circlip
  ⑤ Dust boot

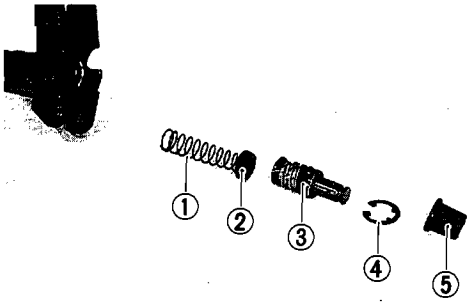

MASTER CYLINDER INSPECTION

Inspect the master cylinder bore for any scratches or other damage.

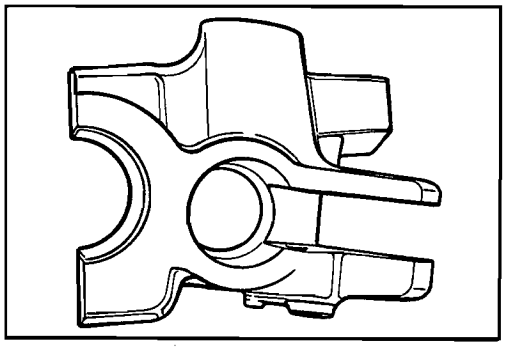

Inspect the piston surface for scratches or other damage.
Inspect the primary cup, dust boot and diaphragm for wear or damage.

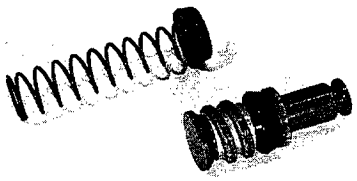

Downloaded from www.Manualslib.com manuals search engine

MASTER CYLINDER REASSEMBLY AND REMOUNTING

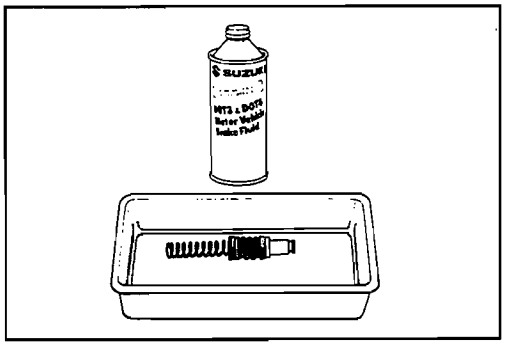

Reassemble and remount the master cylinder in the reverse order of removal and disassembly. Also observe the following instructions:

CAUTION:

* **Wash the master cylinder components with fresh brake fluid before reassembly.**
* **Never use cleaning solvent or gasoline to wash them.**
* **Apply brake fluid to the cylinder bore and all the internal parts to be inserted into the bore.**

99000-23110: SUZUKI BRAKE FLUID DOT3 & 4

- When mounting the master cylinder on the handlebar, align the master cylinder holder mating surface ① with punched mark ② on the handlebar, and tighten the upper clamp bolt first as shown.

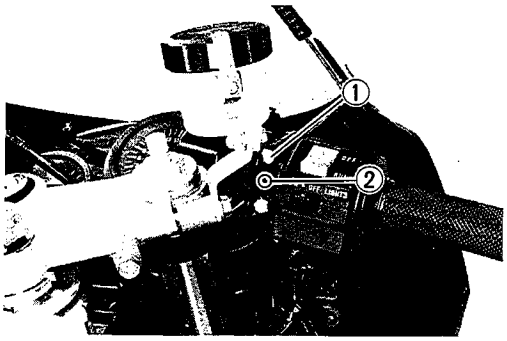

Front brake master cylinder bolt : 5 – 8 N·m (0.5 – 0.8 kg-m)

CAUTION:

Bleed air after reassembling the master cylinder. (Refer to page 2-13.)

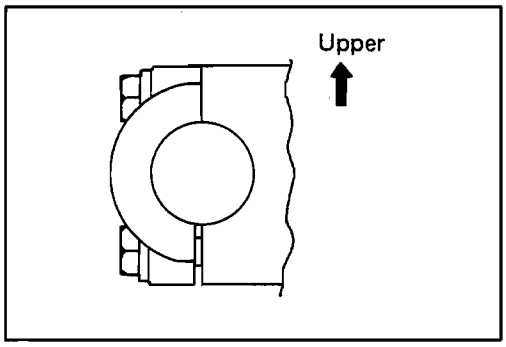

Downloaded from www.Manualslib.com manuals search engine

FRONT FORK

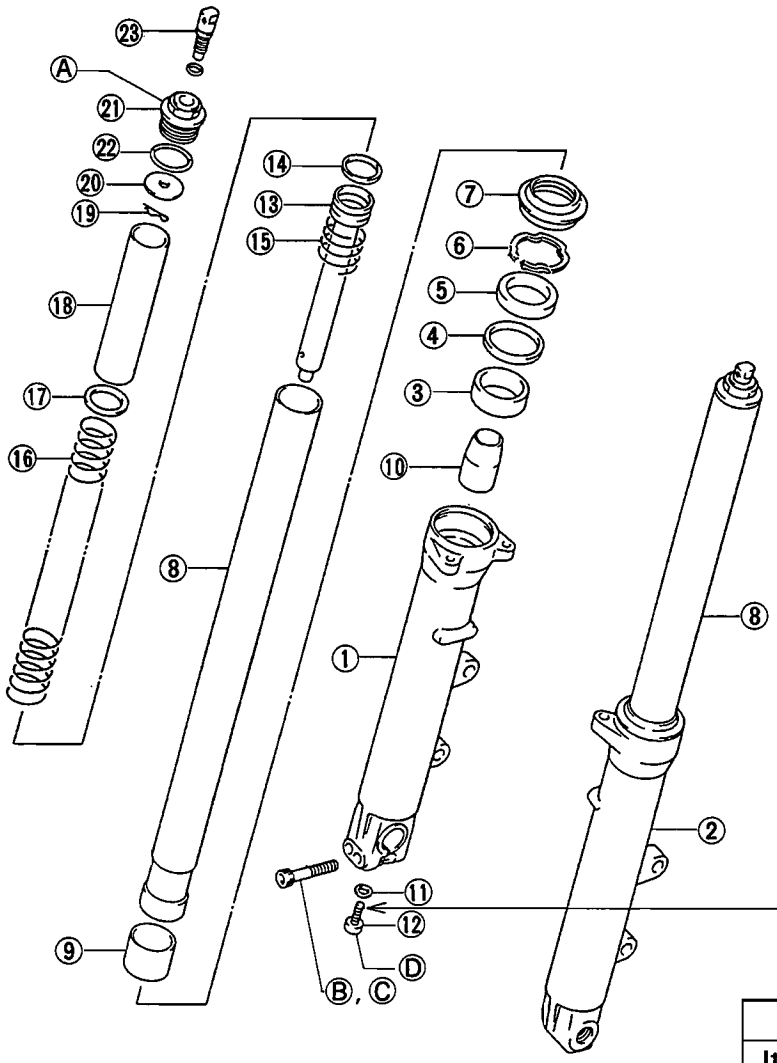

① Outer tube
② Outer tube
③ Bushing guide
④ Spacer seal
⑤ Oil seal
⑥ Snap ring
⑦ Dust seal
⑧ Inner tube
⑨ Guide bushing
⑩ Oil lock piece
⑪ Gasket
⑫ Bolt
⑬ Cylinder
⑭ Piston ring
⑮ Rebound spring
⑯ Spring
⑰ Spring joint
⑱ Spacer
⑲ Pin
⑳ Spring seat
㉑ Cap
㉒ O-ring
㉓ Adjust bolt
Ⓐ Inner tube cap
Ⓑ Bolt
Ⓒ Bolt
Ⓓ Bolt

Tightening torque		
Item	N·m	kg-m
Ⓐ	15 – 30	1.5 – 3.0
Ⓑ	15 – 25	1.5 – 2.5
Ⓒ	15 – 25	1.5 – 2.5
Ⓓ	34 – 46	3.4 – 4.6

REMOVAL AND DISASSEMBLY

- Remove the fairing. (Refer to page 7-1.)
- Remove the front wheel. (Refer to page 7-3.)
- Remove the front fender brace and front fender by removing eight allen screws.

09900-00401: L-type hexagon wrench set

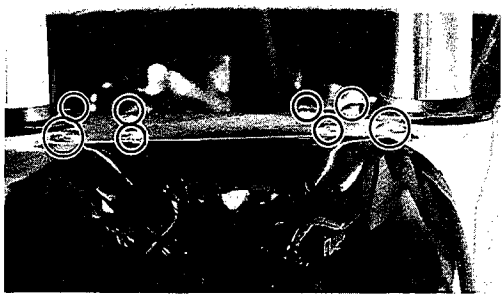

Downloaded from www.Manualslib.com manuals search engine

- Loosen the front fork cap bolt ①, handlebar set bolts ②, front fork upper and lower clamp bolts ③ and nut ④, and pull down the front fork assembly.

  09900-00401: L-type hexagon wrench set

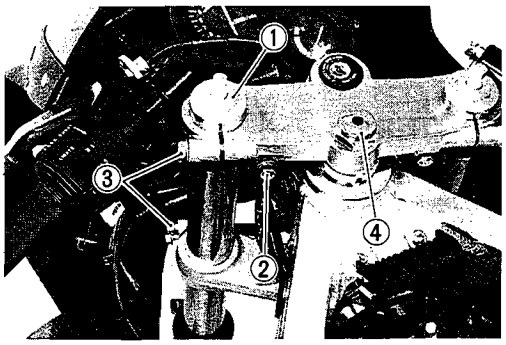

- Remove the front fork cap bolt Ⓐ, spacer Ⓑ, spring seat Ⓒ, and spring Ⓓ.

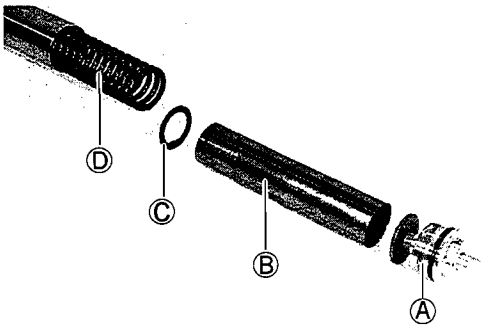

- Invert the fork and stroke it several times to remove the oil.
- Hold the fork inverted for a few-minutes to drain the oil.

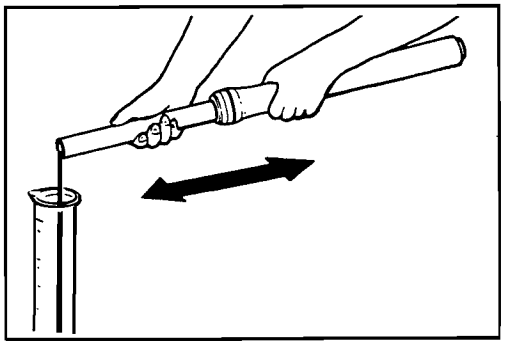

- Remove the damper rod securing bolt with the special tools.

① **09940-34520: "T" handle**

② **09940-34581: Attachment "F"**

③ **09900-00401: L-type hexagon wrench set**

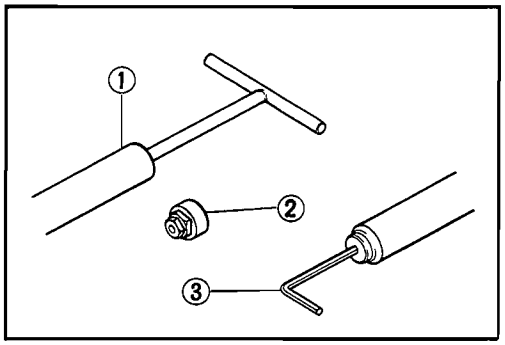

- Remove the dust seal.
- Remove the stopper ring.
- Draw out the damper rod and rebound spring.

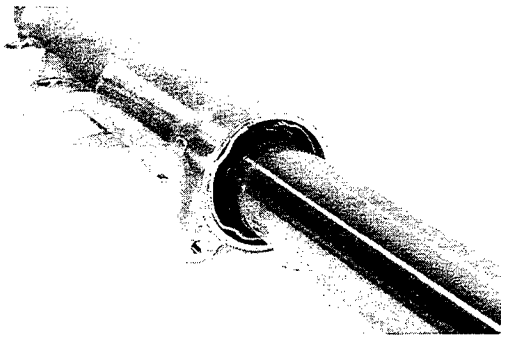

Downloaded from www.Manualslib.com manuals search engine

- While holding the caliper mounting portion by vise, separate the inner tube from the outer tube.

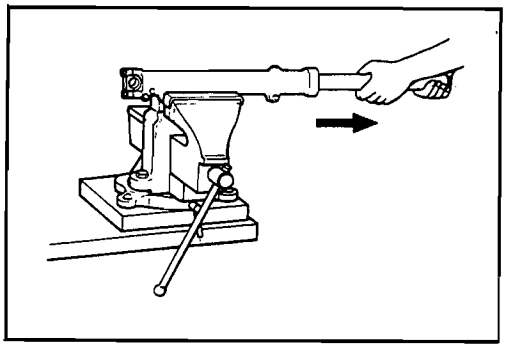

CAUTION:
The outer tube and inner tube "anti-friction" metals must be replaced along with the oil seal any time the fork is disassembled.

- Remove the oil lock piece ①.

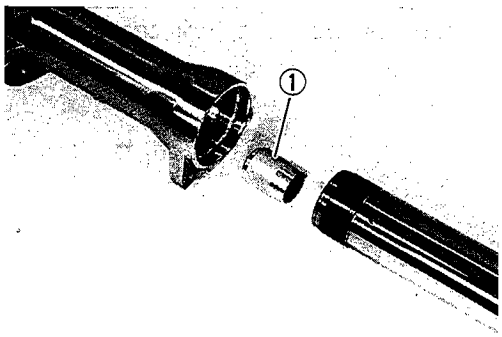

INSPECTION

OIL LOCK PIECE, PISTON RING

Inspect the oil lock piece, piston ring for wear on damage.

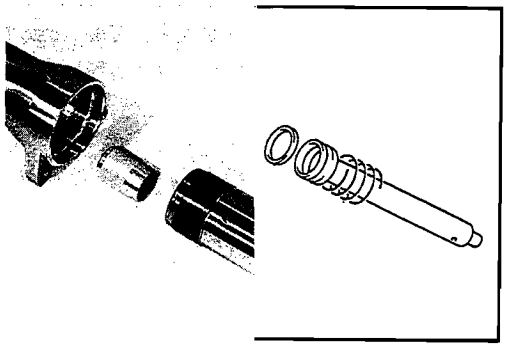

INNER AND OUTER TUBES

Inspect the inner tube outer surface and outer tube inner surface for any scuffing.

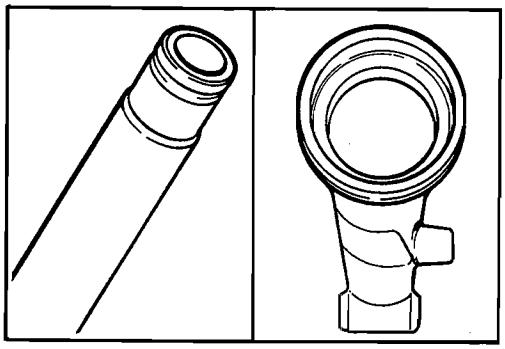

FORK SPRING

Measure the fork spring free length. If it is shorter than the service limit, replace it with a new one.

Service Limit: 287 mm (11.30 in)

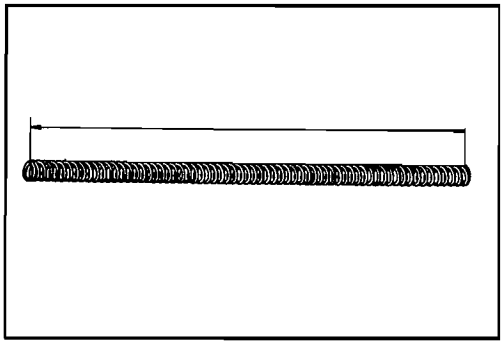

Downloaded from www.Manualslib.com manuals search engine

REASSEMBLY AND REMOUNTING

Reassemble and remount the front fork in the reverse order of removal and disassembly, and also carry out the following steps.

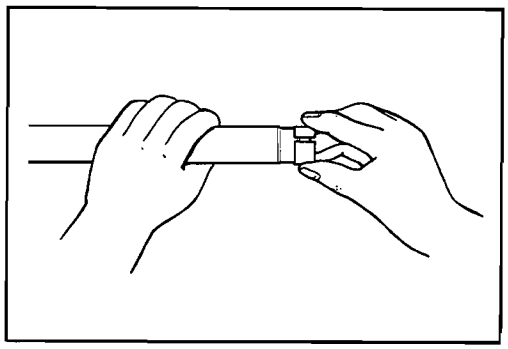

INNER TUBE METAL

Install the metal by hand as shown.

CAUTION:

Use special care to prevent damage to the "Teflon" coated surface of the Anti-friction metal when mounting it.

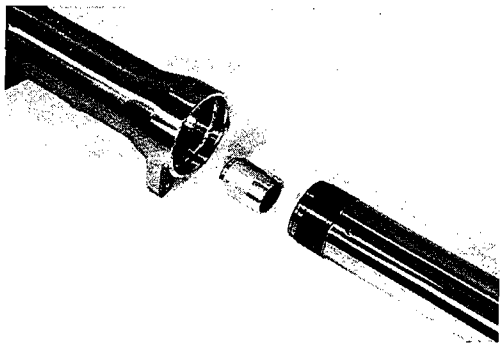

OIL LOCK PIECE

Install the oil lock piece ① as shown in the photograph.

CYLINDER LOCK BOLT

Refer to page 7-13.

Tighten the cylinder lock bolts.

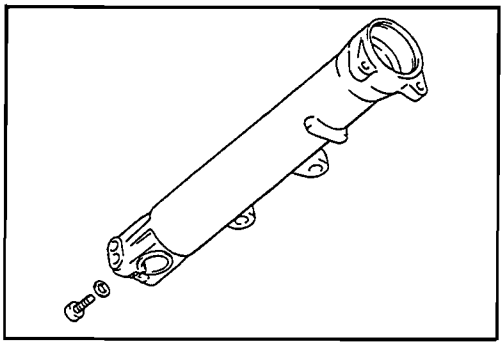

OUTER TUBE METAL, WASHER AND OIL SEAL

- Install the outer tube metal, washer and oil seal with the special tool.

CAUTION:

Use special care to prevent damage to the "Teflon" coated surface of the anti-friction metal when mounting it.

09940-50112: Front fork oil seal installer

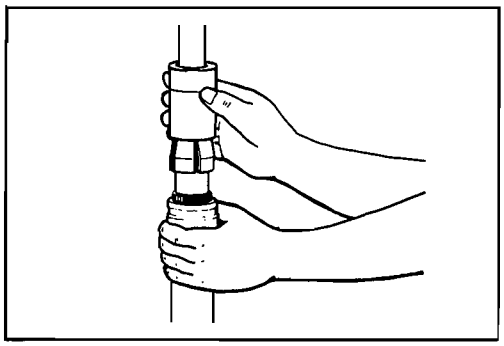

FORK OIL

- Be sure to use a front fork oil whose viscosity rating meets the specification below.

Fork oil: Fork oil # 10

Capacity: 429 ml (14.5/15.1 US/Imp qt)

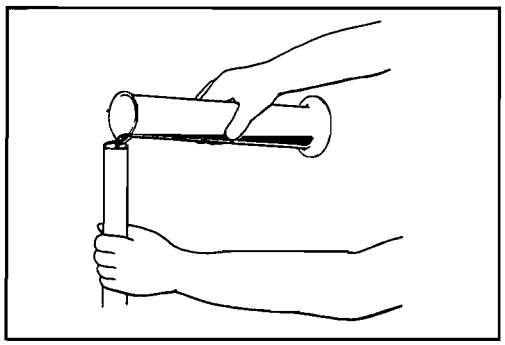

Downloaded from www.Manualslib.com manuals search engine

- Hold the front fork vertical and adjust the fork oil level with the special tool.

NOTE:
When adjusting oil level, remove the fork springs and compress the inner tube fully.

09943-74111: Fork oil level gauge

Oil level: 110 mm (4.33 in)

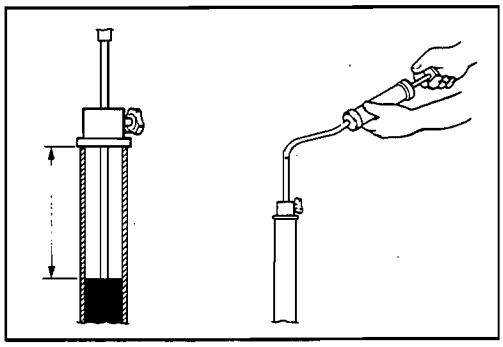

FORK SPRING

- When installing the fork spring, close pitch end should position in top.

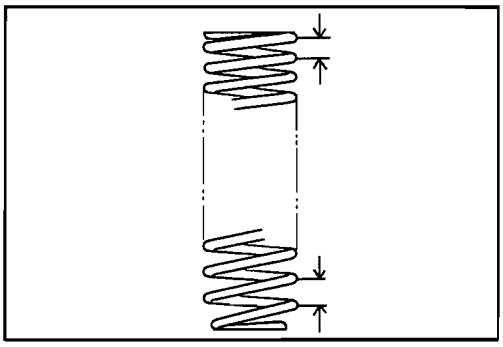

INNER TUBE

- Position the inner tube with its cap upper surface located higher than the upper bracket by 10 mm (0.393 in) and then tighten the clamp bolt.

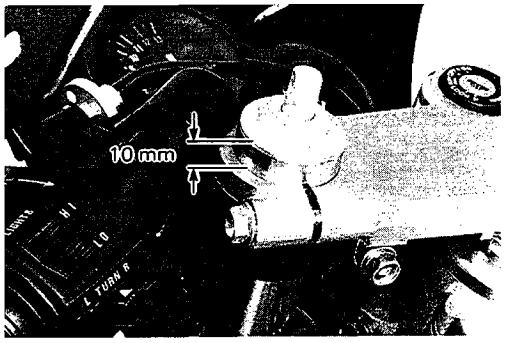

FRONT FORK SETTING

- Turn the spring adjuster ① for desired stiffness.

NOTE:
The reference lines on both the right and left adjusters should be in equal position.

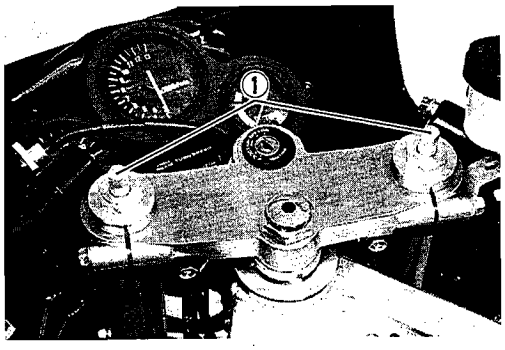

FRONT FORK SPRING

Spring pre-load is adjustable for ten steps. Shortening the adjuster length Ⓐ by turning the adjuster ① clockwise makes the spring pre-load larger, and making the adjuster length Ⓐ long make the spring pre-load small.

Standard setting: No. 4 (from top side)

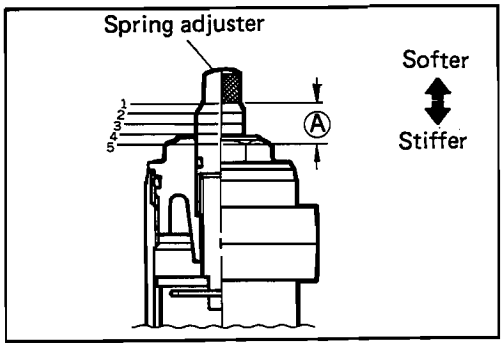

Downloaded from www.Manualslib.com manuals search engine

STEERING STEM

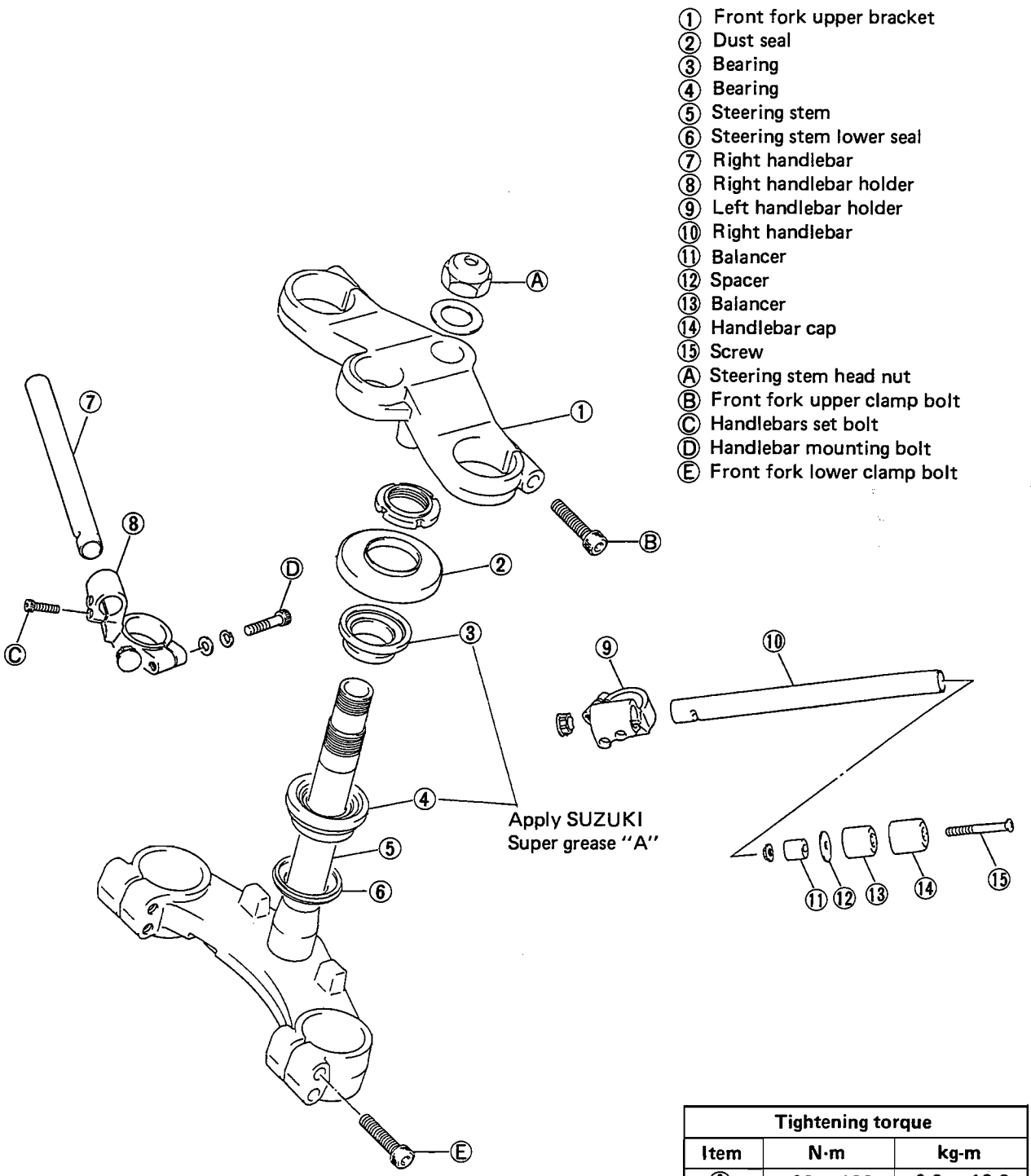

① Front fork upper bracket
② Dust seal
③ Bearing
④ Bearing
⑤ Steering stem
⑥ Steering stem lower seal
⑦ Right handlebar
⑧ Right handlebar holder
⑨ Left handlebar holder
⑩ Right handlebar
⑪ Balancer
⑫ Spacer
⑬ Balancer
⑭ Handlebar cap
⑮ Screw
Ⓐ Steering stem head nut
Ⓑ Front fork upper clamp bolt
Ⓒ Handlebars set bolt
Ⓓ Handlebar mounting bolt
Ⓔ Front fork lower clamp bolt

Tightening torque		
Item	N·m	kg-m
Ⓐ	60 – 100	6.0 – 10.0
Ⓑ	15 – 25	1.5 – 2.5
Ⓒ	6 – 10	0.6 – 1.0
Ⓓ	15 – 25	1.5 – 2.5
Ⓔ	15 – 25	1.5 – 2.5

Downloaded from www.Manualslib.com manuals search engine

REMOVAL AND DISASSEMBLY

- Remove the fairing. (Refer to page 7-1.)
- Remove the front wheel. (Refer to page 7-3.)
- Remove the front fork. (Refer to page 7-13.)
- Remove the meter assembly by loosening three bolts.

09900-00401: L-type hexagon wrench set

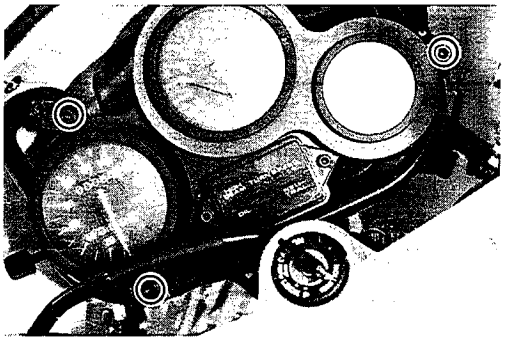

- Disconnect the lead wires of the meter assembly and the headlight assembly.

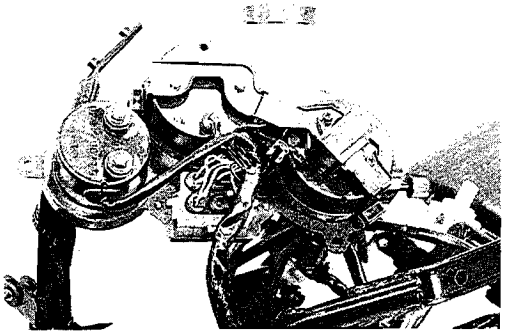

- Remove the headlight assembly.

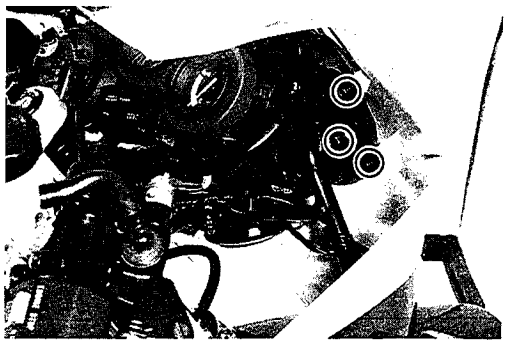

- Using a center punch and hammer, remove the bolt to detach the ignition switch from the steering stem upper bracket.

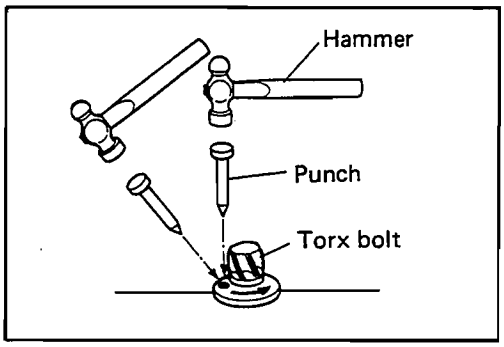

- Remove the front brake hose connector by loosening two bolt.

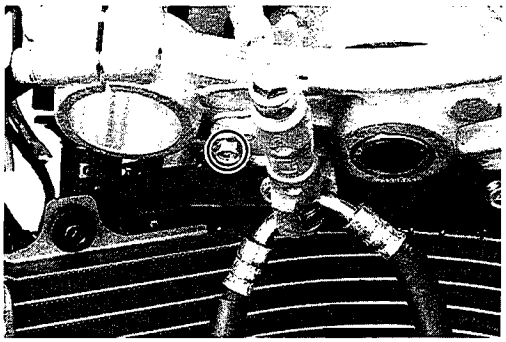

Downloaded from www.Manualslib.com manuals search engine

- Remove the steering stem head nut ①.

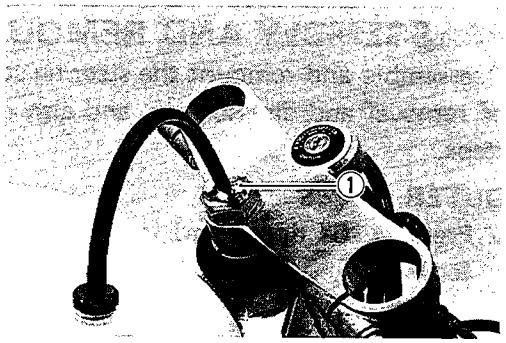

- Remove the steering stem nut with the special tool, then draw out the steering stem.

09940-14911: Steering stem nut wrench

NOTE:
Hold the steering stem lower bracket by hand to prevent it from falling.

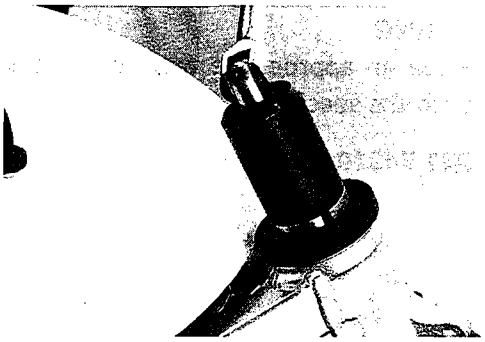

- Remove the lower race.

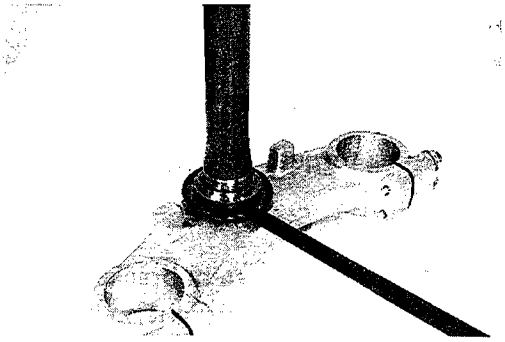

- Push out the steering stem bearing races, upper and lower, with the special tools.

09941-54911: Steering outer race remover

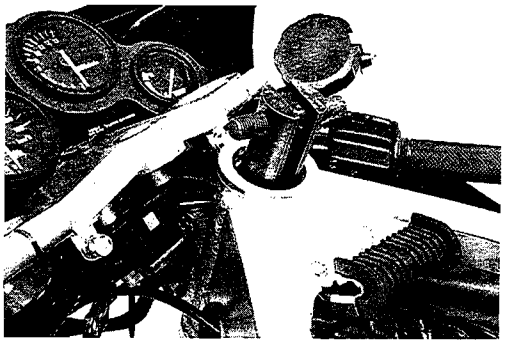

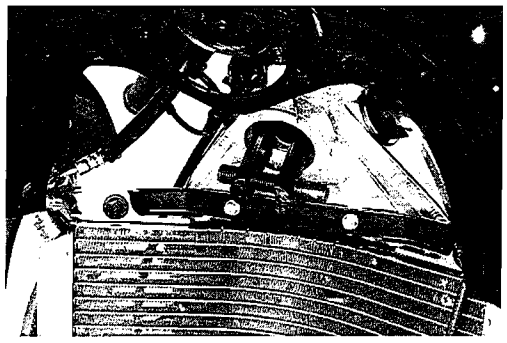

Downloaded from www.Manualslib.com manuals search engine

REASSEMBLY AND REMOUNTING

Reassemble and remount the steering stem in the reverse order of removal and disassembly, and also carry out the following steps.

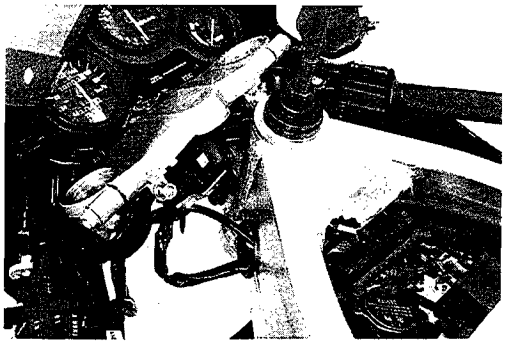

OUTER RACES

- Press in the upper and lower outer races using the special tool.

09941-34513: Steering outer race installer

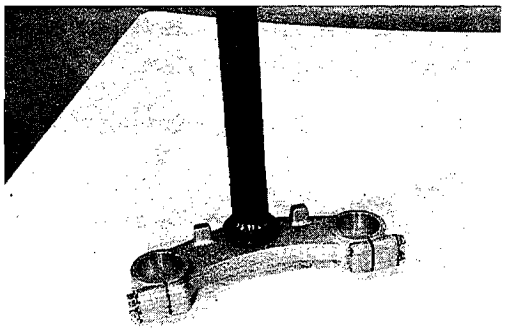

BEARING

- Place an appropriate washer and press in the lower bearing with the special tool.

09941-74910: Steering bearing installer

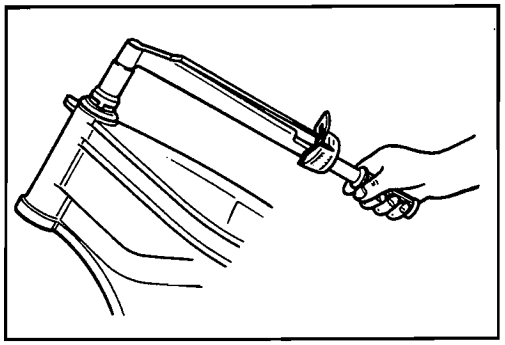

STEM NUT

- Fit the dust seal to the stem nut.
- Tighten the steering stem nut to the specified torque.

Tightening torque: 40 – 50 N.m (4 – 5 kg-m)

09940-14911: Steering stem nut wrench

- Turn the steering stem bracket about five or six times all the way to the left and right so that the bearings will be seated properly.
- Turn back the stem nut by 1/4 – 1/2 turn.

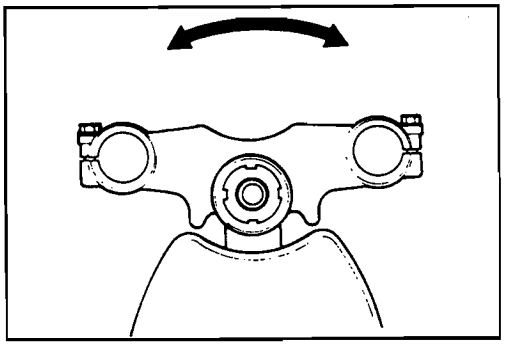

NOTE:
This adjustment will vary from motorcycle to motorcycle.

- Steering stem head nut should be tightened to the specified torque.

Tightening torque: 60 – 100 N·m (6.0 – 10.0 kg-m)

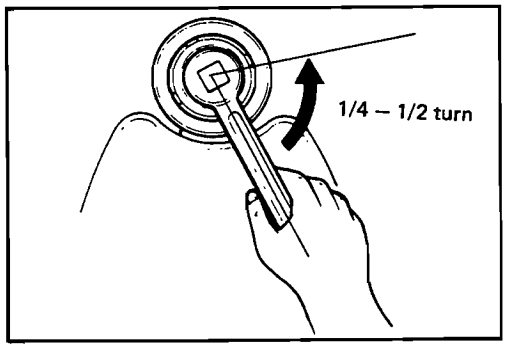

CAUTION:
After performing the adjustment and installing the steering stem upper bracket, "rock" the front wheel assembly forward and back to ensure that there is no play and that the procedure was accomplished correctly. Finally check to be sure that the steering stem moves freely from left to right with own weight. If play or stiffness is noticeable, re-adjust the steering stem nut.

Downloaded from www.Manualslib.com manuals search engine

IGNITION SWITCH

To install the ignition switch, always use the new special bolt and follow the procedures below.

NOTE:
The spare ignition switch comes equipped with the special bolts, however, the bolt is also individually available as spare parts.

- Using the special bolts, attach the ignition switch on the steering stem upper bracket in place and run in the bolts with the special tool.

09930-11910: Torx wrench

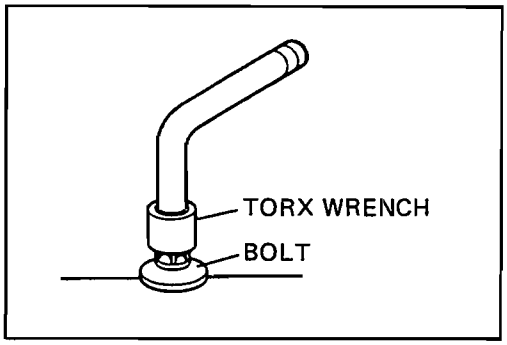

- Continue turning the tool until the tool slips from the bolt head or the bolt head breaks off, then the bolt has become tightened to the proper specification.

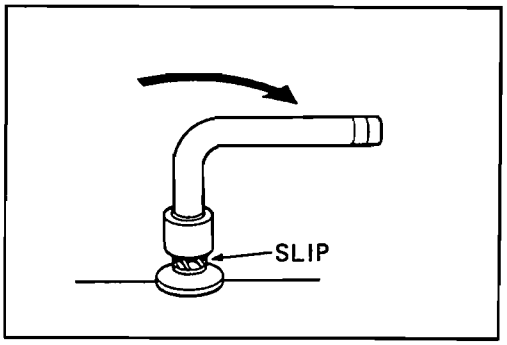

Downloaded from www.Manualslib.com manuals search engine

REAR BRAKE

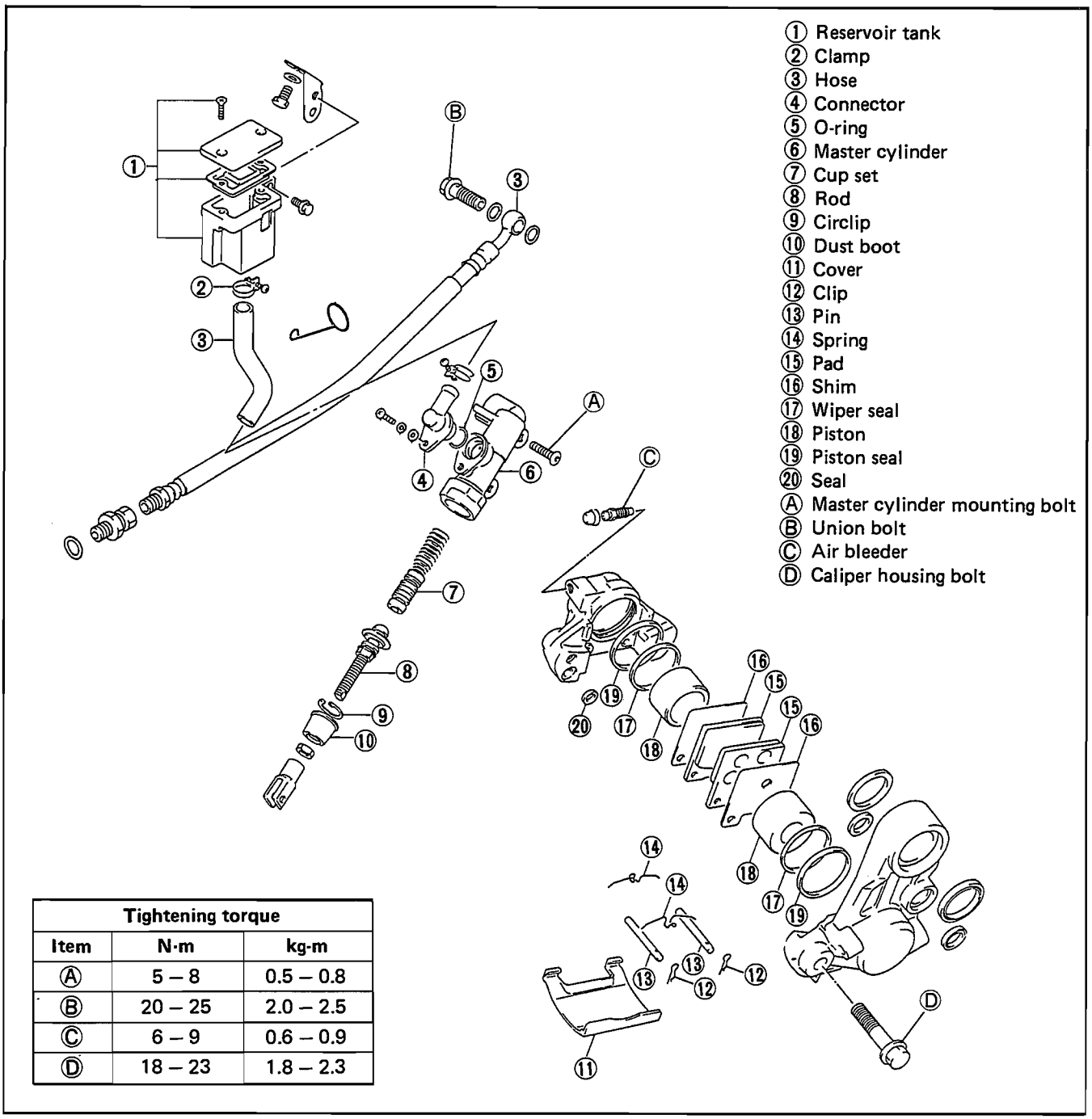

Tightening torque		
Item	N·m	kg·m
Ⓐ	5 – 8	0.5 – 0.8
Ⓑ	20 – 25	2.0 – 2.5
Ⓒ	6 – 9	0.6 – 0.9
Ⓓ	18 – 23	1.8 – 2.3

BRAKE PAD REPLACEMENT

- Remove the dust cover.
- Remove the clips ① and draw out the pins ③. Remove the springs ②.
- Take out the shims and pads.

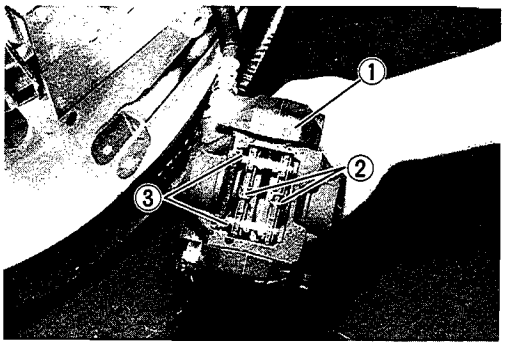

CAUTION:

* **Do not operate the brake pedal while dismounting the pads.**
* **Replace the brake pad as a set, otherwise braking performance will be adversely affected.**

Downloaded from www.Manualslib.com manuals search engine

CALIPER REMOVAL AND DISASSEMBLY

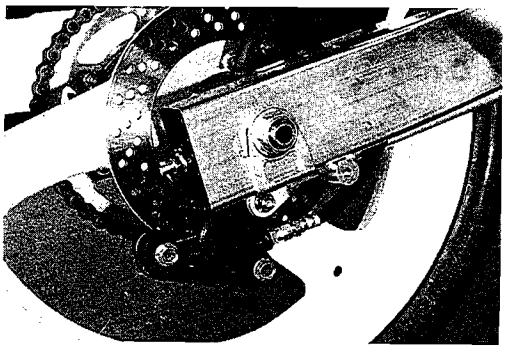

- Remove the union bolt and catch the brake fluid in a suitable receptacle.
- Remove the caliper mounting bolts.

NOTE:
Slightly loosen the caliper housing bolts to facilitate later disassembly.

- Remove the pads. (Refer to page 7-23.)
- Remove the caliper housing bolts and separate the caliper halves.

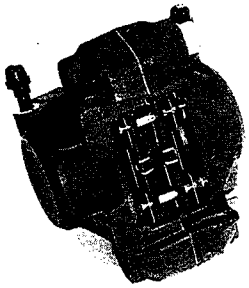

① Caliper
② Pad
③ Shim
④ Clip
⑤ Spring
⑥ Pin

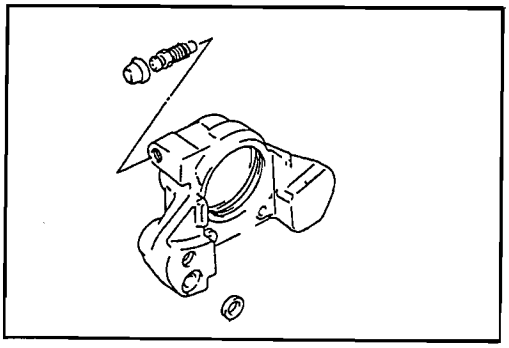

- Remove the O-ring.

NOTE:
Once the caliper halves have been separated, replace the O-ring with a new one.

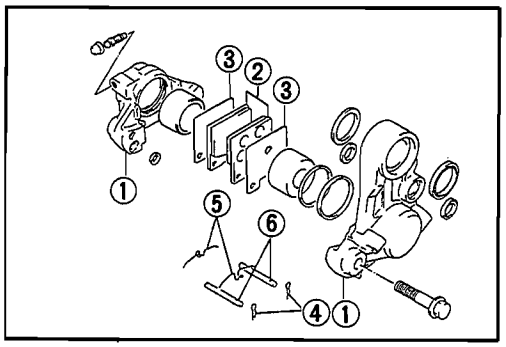

- Place a rag over the piston to prevent it from popping out and push out the piston by using air gun.

CAUTION:
To prevent piston damage, do not use high pressure air.

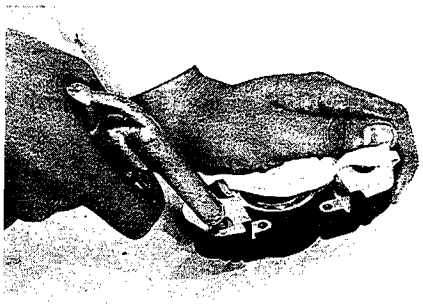

Downloaded from www.Manualslib.com manuals search engine

- Remove the piston ①, dust boot ②, piston seal ③ and O-ring ④.

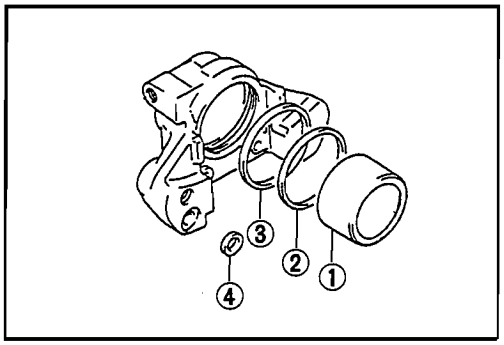

INSPECTION

CYLINDER AND PISTON

Inspect the cylinder bore wall for nicks, scratches or other damage.
Inspect the piston surface for any flaws or other damage.

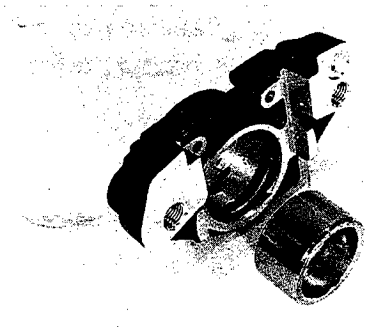

RUBBER PART

Inspect each rubber part for damage and wear.

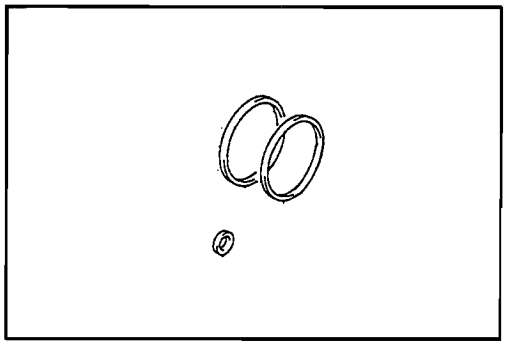

DISC

Using a micrometer, check the disc for wear. Its thickness can be checked with disc and wheel in place. The service limit for the thickness of the disc is shown below:

09900-20205: Micrometer (0 – 25 mm)

Service Limit (Rear disc): 4.3 mm (0.169 in)

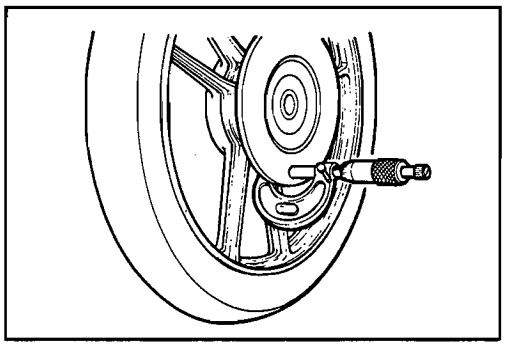

With the disc mounted on the wheel, check the disc for face runout with a dial gauge, as shown.

09900-20606: Dial gauge (1/100 mm)

09900-20701: Magnetic stand

Service Limit: 0.30 mm

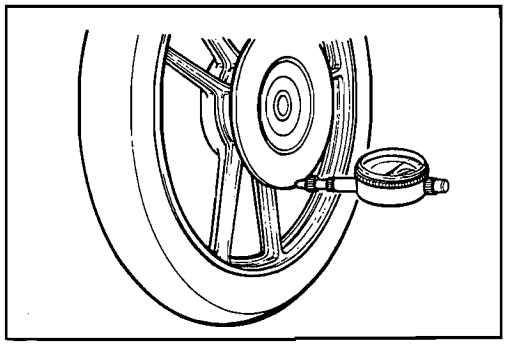

Downloaded from www.Manualslib.com manuals search engine

REASSEMBLY

Reassemble and remount the caliper in the reverse order of removal and disassembly, and also carry out the following steps:

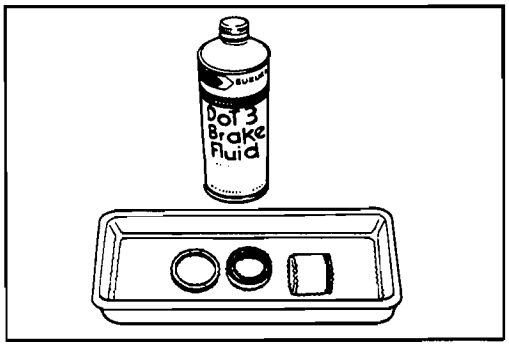

CAUTION:

* **Wash the caliper components with fresh brake fluid before reassembly.**
* **Never use cleaning solvent or gasoline to wash them.**
* **Apply brake fluid to the caliper bore and piston to be inserted into the bore.**
* **Bleed the air after reassembling the caliper (Refer to page 2-13).**

- Pull out the cotter pin ① and take off the pin ②.

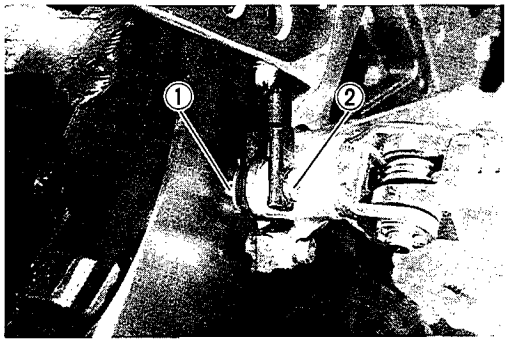

- Remove the two master cylinder mounting bolts.

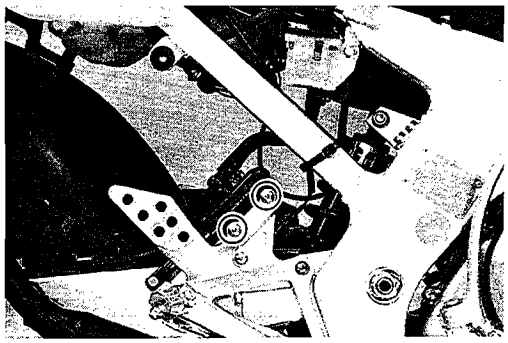

- Place a cloth underneath the union bolt on the master cylinder to catch spilled drops of brake fluid. Unscrew the union bolt and disconnect the brake hose from the master cylinder joint.

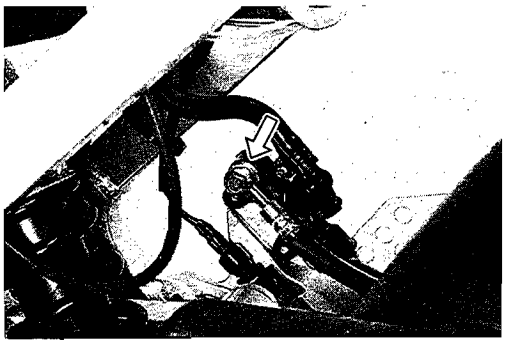

CAUTION:

Immediately and completely wipe off any brake fluid contacting any part of the motorcycle. The fluid reacts chemically with paint, plastics and rubber materials, etc. and will damage them severely.

- Disconnect the reservoir tank hose by loosening a clamp screw.
- Drain the fluid from the reservoir tank.

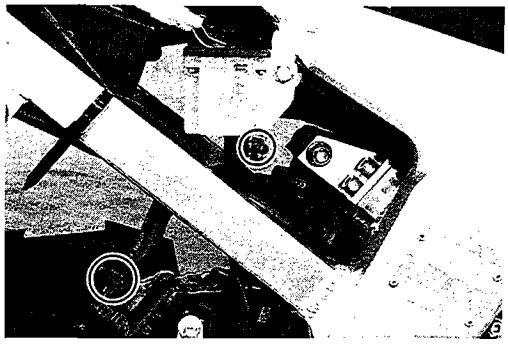

Downloaded from www.Manualslib.com manuals search engine

- Remove the connector by loosening a screw and then remove the O-ring.

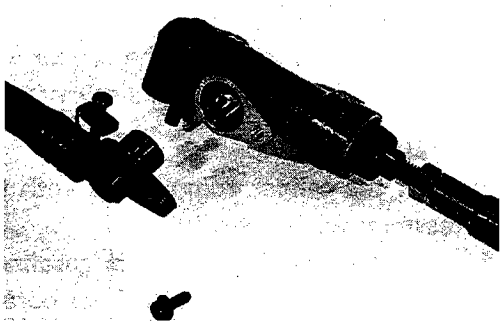

- Remove the dust boot.
- Remove the circlip with the special tool.

09900-06105: Snap ring pliers

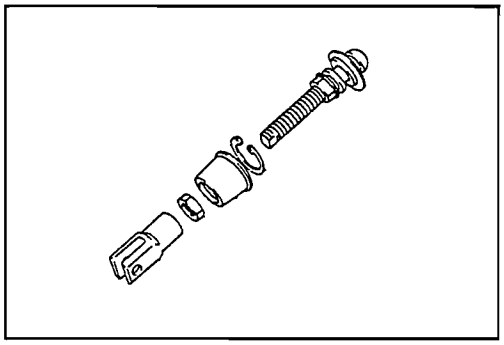

- Draw out the push rod, cup piston set.

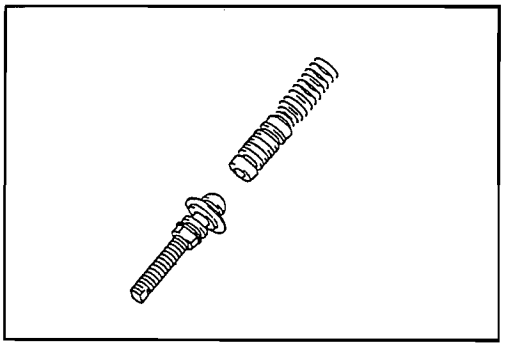

INSPECTION

CYLINDER

Inspect the cylinder bore wall for any scratches or other damage.

PISTON, CUP SET AND RUBBER PARTS

Inspect the piston surface for scratches or other damage.
Inspect the cup set and each rubber part for damage.

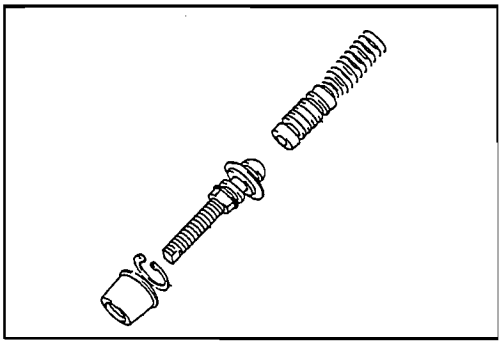

Downloaded from www.Manualslib.com manuals search engine

REASSEMBLY AND REMOUNTING

Reassemble and remount the master cylinder in the reverse order of removal and disassembly, and also carry out the following steps:

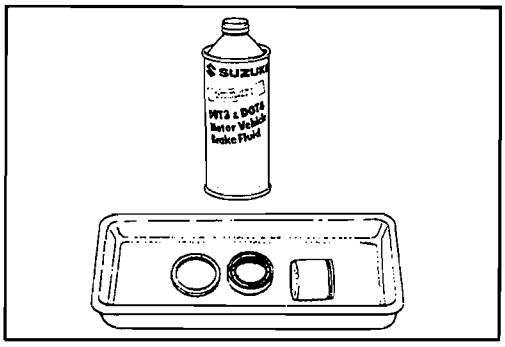

CAUTION:

Wash the master cylinder components with fresh brake fluid before reassembly. Never use cleaning solvent or gasoline to wash them. Apply brake fluid to the cylinder bore and all the internals to be inserted into the bore.

CAUTION:

Bleed the air after reassembling master cylinder. (Refer to page 2-13.)

Adjust the rear brake light switch and brake pedal height after installation. (Refer to page 2-12.)

REAR WHEEL

CONSTRUCTION

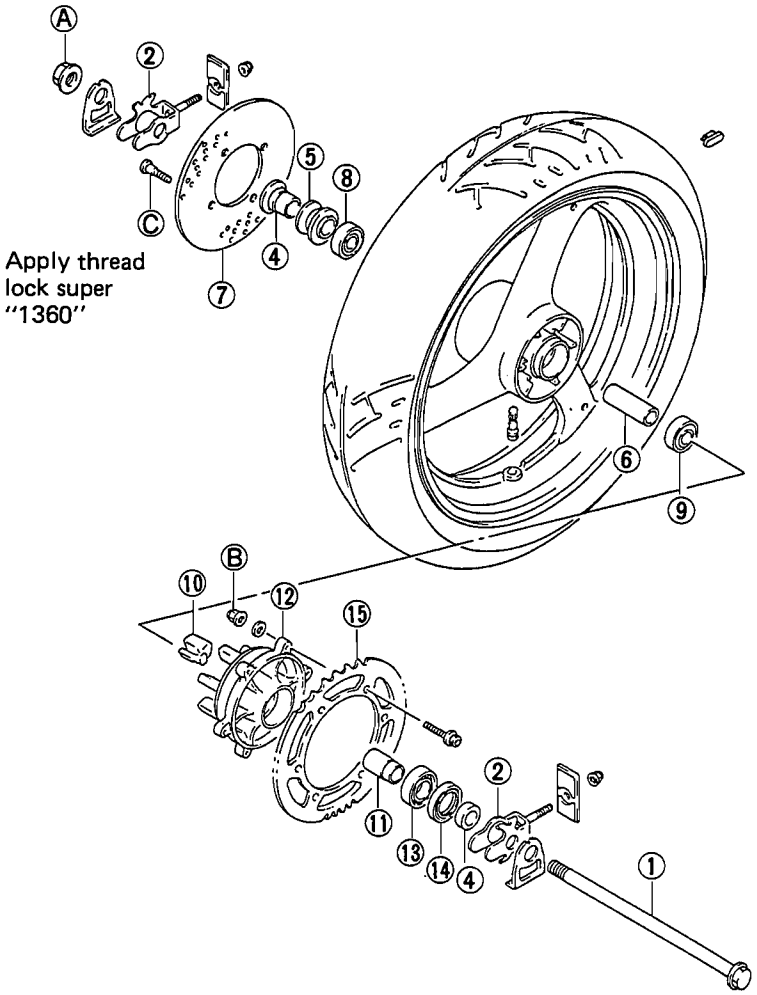

① Axle shaft
② Chain adjuster
③ Spacer
④ Spacer
⑤ Spacer
⑥ Spacer
⑦ Disc plate
⑧ Bearing
⑨ Bearing
⑩ Cushion
⑪ Spacer
⑫ Sprocket mounting drum
⑬ Bearing
⑭ Oil seal
⑮ Sprocket
Ⓐ Axle nut
Ⓑ Sprocket mounting nut
Ⓒ Disc plate mounting bolt

Tightening torque		
Item	N·m	kg-m
Ⓐ	85 – 115	8.5 – 11.5
Ⓑ	20 – 30	2.0 – 3.0
Ⓒ	15 – 25	1.5 – 2.5

Downloaded from www.Manualslib.com manuals search engine

REMOVAL AND DISASSEMBLY

Remove the rear brake caliper. (Refer to page 7-24.)

- Support the motorcycle with a jack or block.
- Remove the rear torque link bolts.

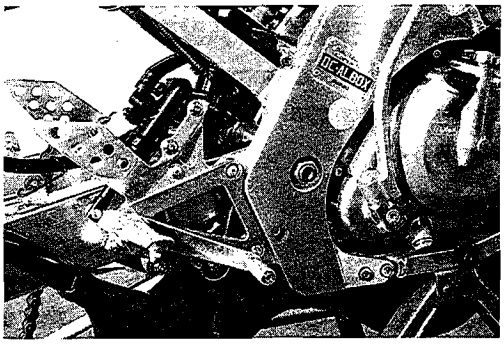

CAUTION:
Do not operate the brake pedal while dismounting the brake caliper.

- Loosen the axle nut and the chain adjuster nuts.
- Draw out the axle shaft.
- Disengage the drive chain from the rear sprocket and remove the rear wheel.

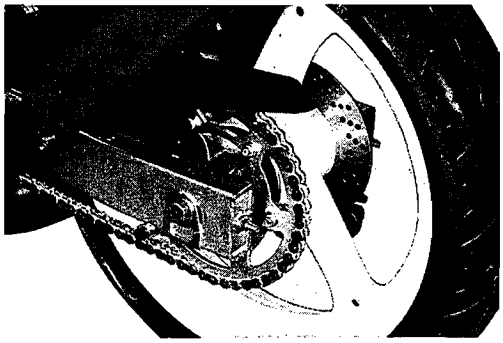

- Separate the rear sprocket mounting drum from the wheel.
- Separate the rear sprocket from the sprocket mounting drum by loosening four nuts.

09900-00401: L-type hexagon wrench set

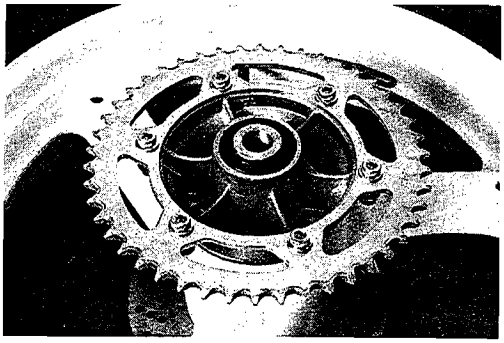

- Remove the oil seal with the special tool.

09913-50121: Oil seal remover

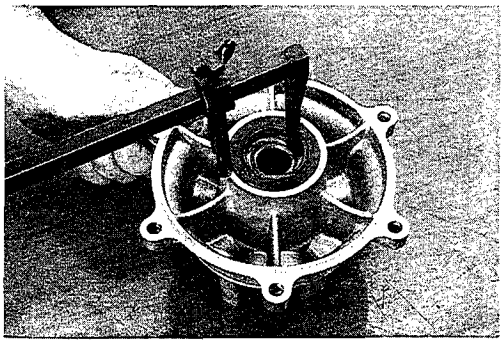

- Drive out the sprocket mounting drum bearing as well as front wheel bearing. (Refer to page 7-5.)

09913-80112: Bearing installer

CAUTION:
The removed bearing should be replaced with a new one.

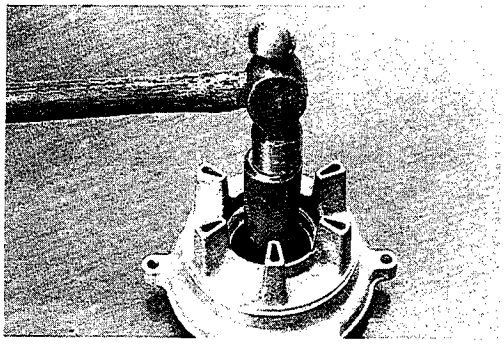

Downloaded from www.Manualslib.com manuals search engine

- Separate the disc from the wheel by loosening four allen bolts.

09900-00401: L-type hexagon wrench set

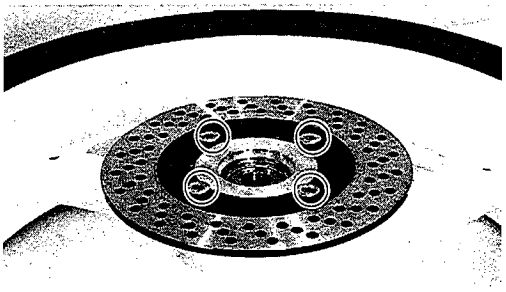

- Drive out the wheel bearings, right and left.
  (Refer to page 7-5.)

CAUTION:
The removed bearing should be replaced with a new one.

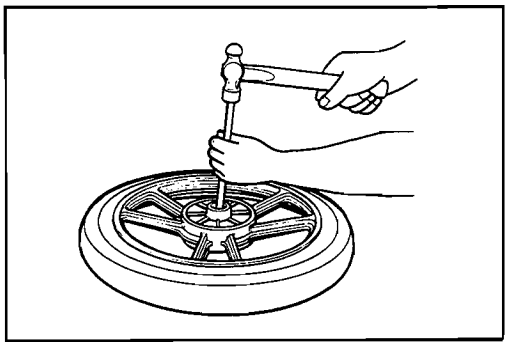

- Remove the six cushions.

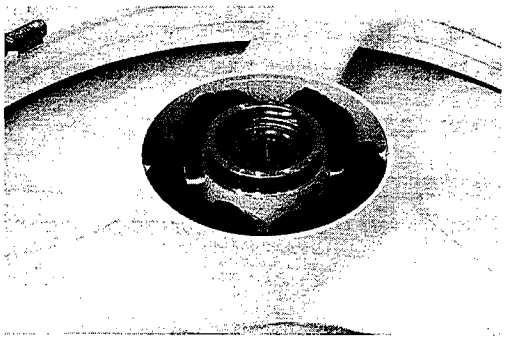

INSPECTION

WHEEL AND SPROCKET MOUNTING
DRUM BEARINGS ..... Refer to page 7- 5
AXLE SHAFT ..... Refer to page 7- 5
WHEEL ..... Refer to page 7- 5
TIRE ..... Refer to page 7-33

CUSHION
Inspect the cushions for wear and damage.

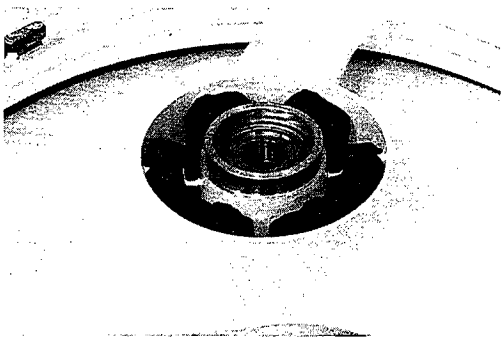

Downloaded from www.Manualslib.com manuals search engine

SPROCKET

Inspect the sprocket teeth for wear. If they are worn as illustrated, replace the sprocket and drive chain.

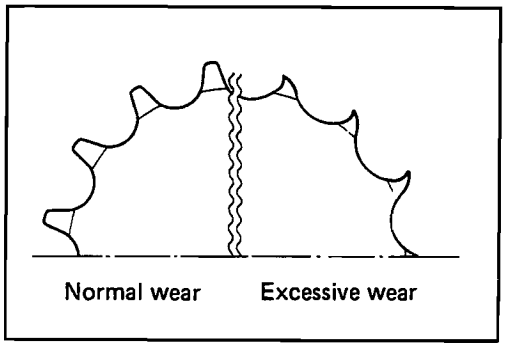

REASSEMBLY AND REMOUNTING

Reassemble and remount the rear wheel in the reverse order of removal and disassembly, and also carry out the following steps:

WHEEL AND SPROCKET MOUNTING DRUM BEARINGS

Apply grease before installing the bearings.

99000-25010: SUZUKI Super grease "A"

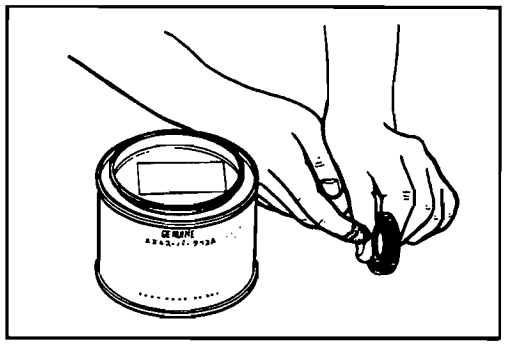

WHEEL BEARINGS

- Install the wheel bearing with the special tools.

09924-84510: Bearing installer set

NOTE:
First install the wheel bearing for right side.

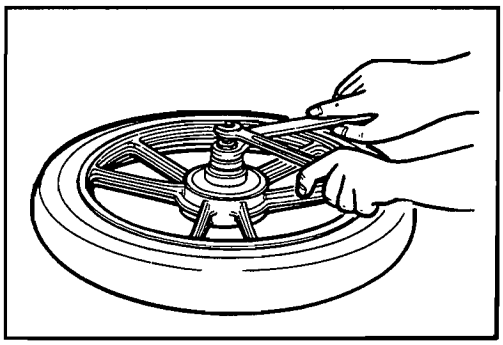

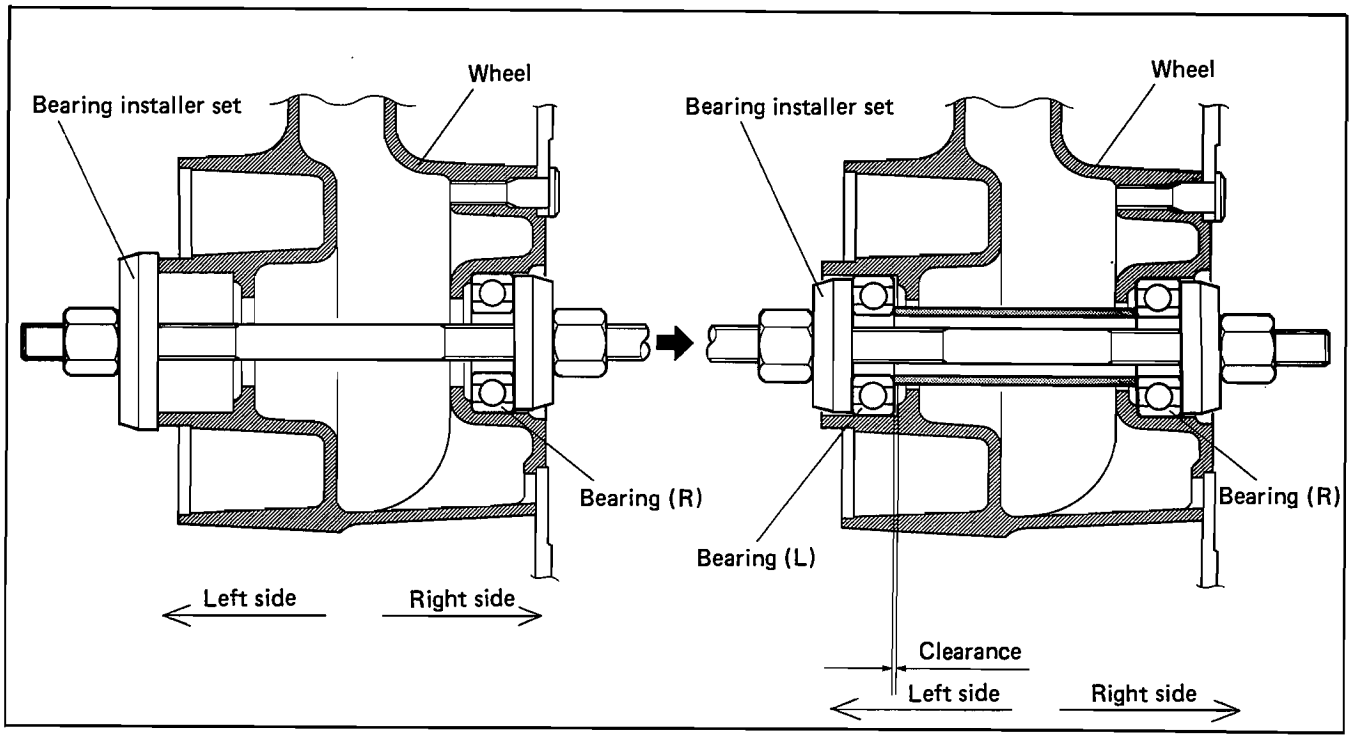

Downloaded from www.Manualslib.com manuals search engine

SPROCKET MOUNTING DRUM BEARING

- Install the bearing with the special tool.

09924-84510: Bearing installer

NOTE:
Apply grease to the bearing and oil seal lip before assembling rear wheel.

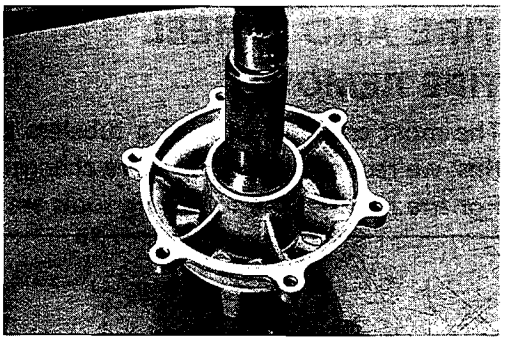

BRAKE DISC

- Make sure that the brake disc is clean and free of any greasy matter.
- Refer to page 7-28.

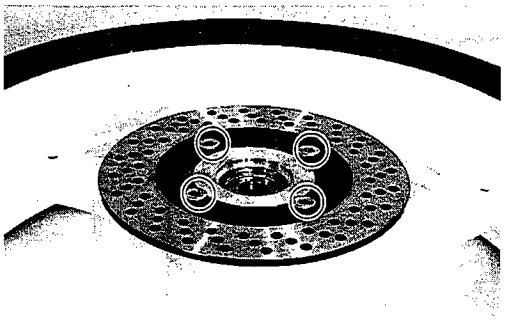

REAR SPROCKET

- Tighten the rear sprocket bolts to the specified torque. (Refer to page 7-28.)

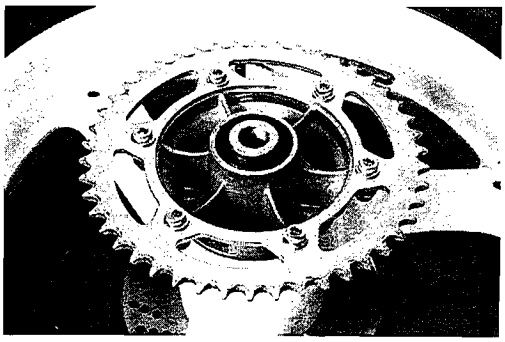

REAR AXLE SHAFT

- Adjust the chain slack after rear wheel installation. (Refer to page 2-11.)
- Tighten the rear axle nut to the specified torque. (Refer to page 7-28.)

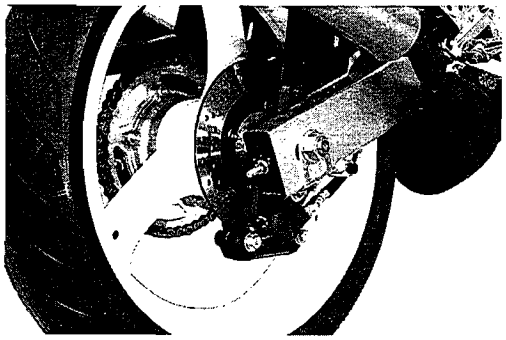

Downloaded from www.Manualslib.com manuals search engine

TIRE AND WHEEL

TIRE REMOVAL

The most critical factor of a tubeless tire is the seal between the wheel rim and the tire bead. Because of this, we recommend using a tire changer which is also more efficient than tire levers.
For tire removal the following tools are required.

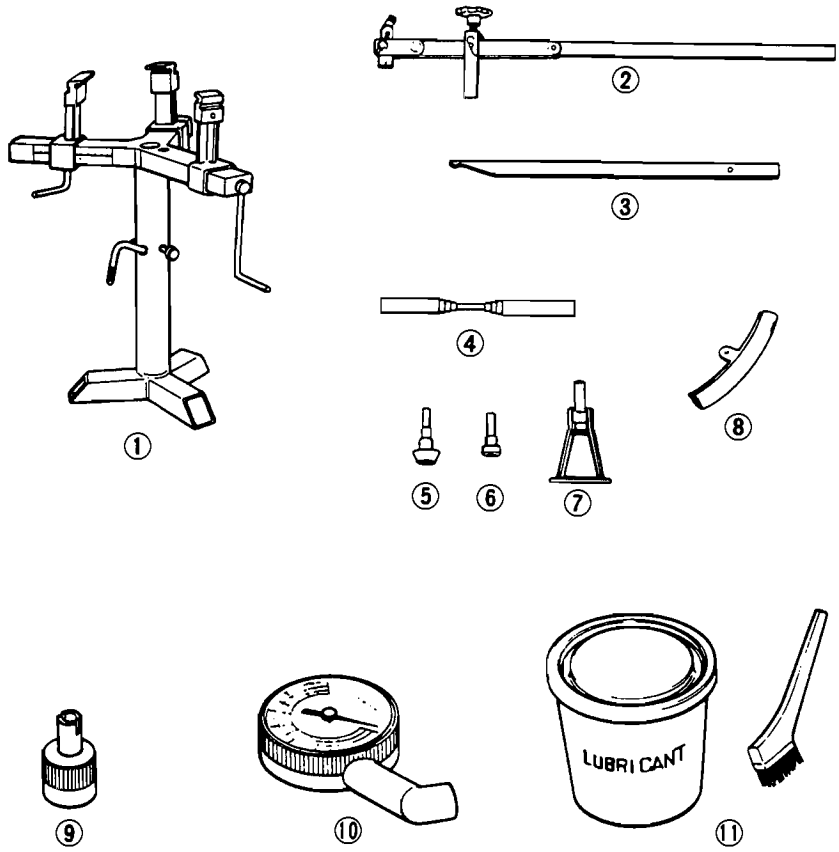

① Tire changer stand
② Operation arm
③ Tire lever
④ Center shaft
⑤ Bead pushing roller
⑥ Rim guide roller
⑦ Bead breaker
⑧ Rim protector
⑨ Core remover
⑩ Air pressure gauge
⑪ Tire lubricant

- Remove the valve core from the valve stem, and deflate the tire completely.

NOTE:
Mark the tire with chalk to note the position ① of the tire on the rim and rotational direction ② of the tire.

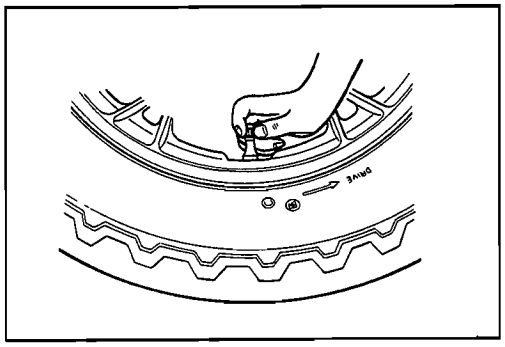

Downloaded from www.Manualslib.com manuals search engine

- Place the center shaft ① to the wheel, and fix the wheel with the rim holder ②.

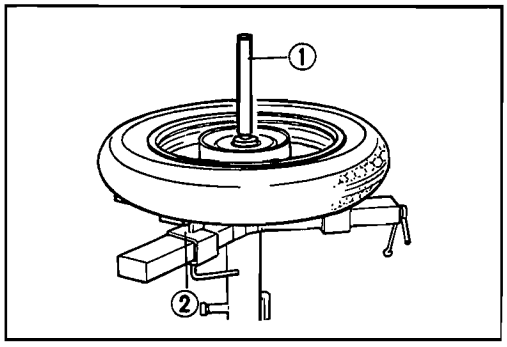

- Attach the operation arm ③ to the center shaft.

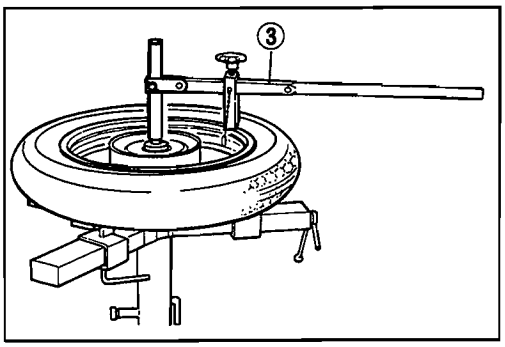

- Attach the bead breaker ④ to the operation arm, and dismount the bead from the rim. Turn the wheel over and dismount the other bead from the rim.

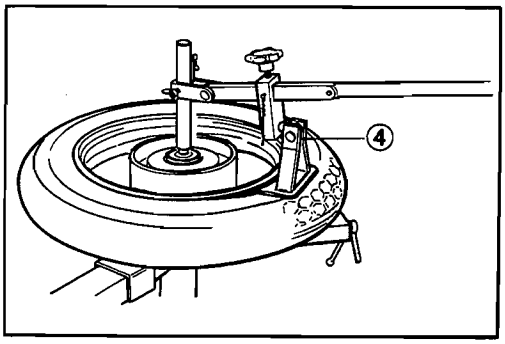

- Install the rim guide roller ⑤.
- Install the rim protector ⑥, and raise the tire bead with the tire lever ⑦.

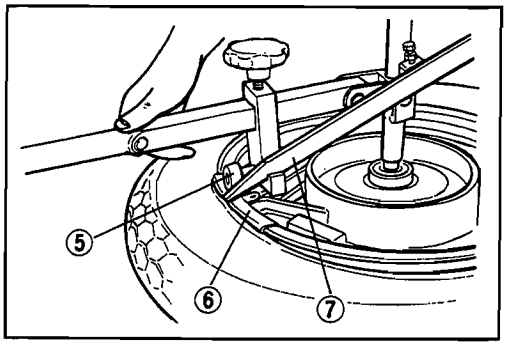

- Set the tire lever against the operation arm, and rotate the lever around the rim. Repeat this procedure to remove the other bead from the rim.

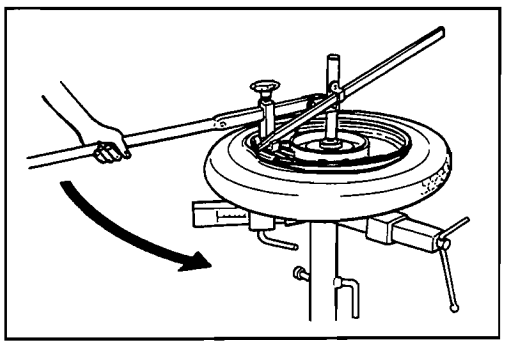

Downloaded from www.Manualslib.com manuals search engine

INSPECTION

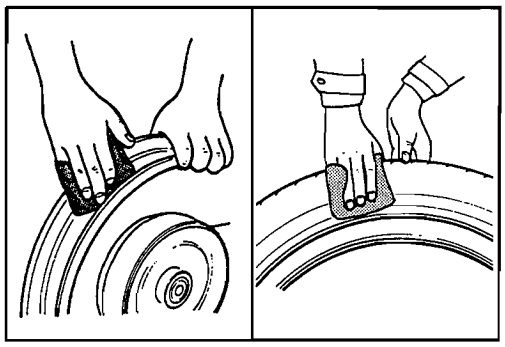

WHEEL

Wipe off any rubber substance or rust from the wheel, and inspect the wheel rim. If any one of the following items is observed, replace it with a new wheel.

* A distortion or crack.
* Any scratches or flaws in the bead seating area.
* Wheel runout (Axial & Radial) of more than 2.0 mm (0.08 in).

TIRE

Thoroughly inspect the removed tire, and if any one of the following items is observed, do not repair the tire. Replace with a new one.

* A puncture or a split whose total length or diameter exceeds 6.0 mm (0.24 in).
* A scratch or split at the side wall.
* Tread depth less than 1.6 mm (0.06 in) in the front tire and less than 2.0 mm (0.08 in) in the rear tire.
* Ply separation.
* Tread separation.
* Tread wear is extraordinarily deformed or distributed around the tire.
* Scratches at the bead.
* Cord is cut.
* Damage from skidding (flat spots).
* Abnormality in the inner liner.

NOTE:
When repairing a flat tire, follow the repair instructions and use only recommended repairing materials.

VALVE INSPECTION

Inspect the valve after the tire is removed from the rim, and replace with a new valve if the seal rubber has any splits or scratches.

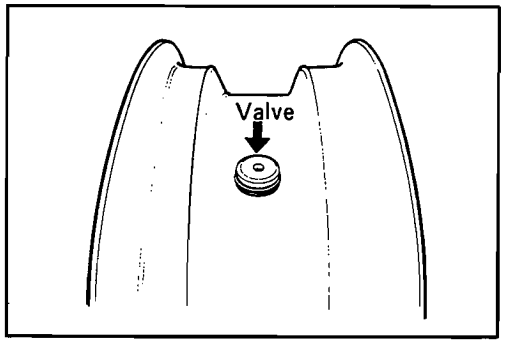

Inspect the removed valve core and replace with the new one if the seal rubber is abnormally deformed or worn.

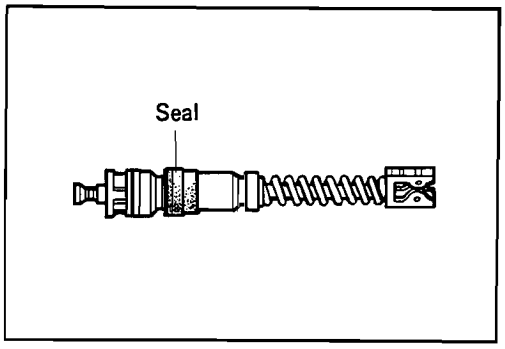

Downloaded from www.Manualslib.com manuals search engine

VALVE INSTALLATION

Any dust or rust around the valve hole must be cleaned off. Then install the valve in the rim.

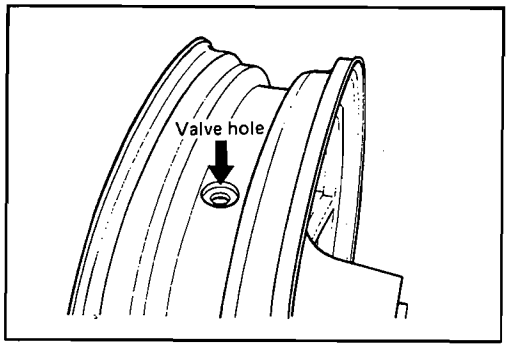

CAUTION:

When installing the valve, tighten the nut ① by hand as much as possible. Holding the nut ① under this condition, tighten the lock nut ②. Do not overtighten the nut ① as this may distort the rubber packing and cause an air leak.

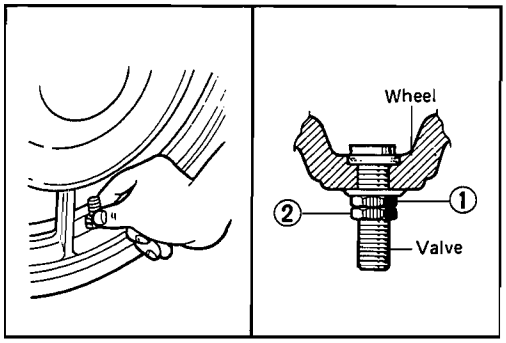

TIRE MOUNTING

- Apply a special tire lubricant or neutral soapy liquid to the tire bead.

CAUTION:

Never apply grease, oil or gasoline to the tire bead.

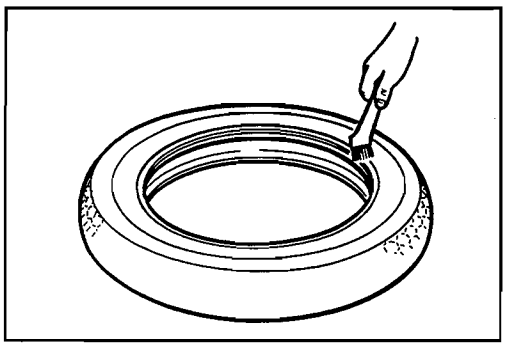

- When installing the tire, make certain that the directional arrow faces the direction of wheel rotation and align the balancing mark of the tire with the valve as shown.

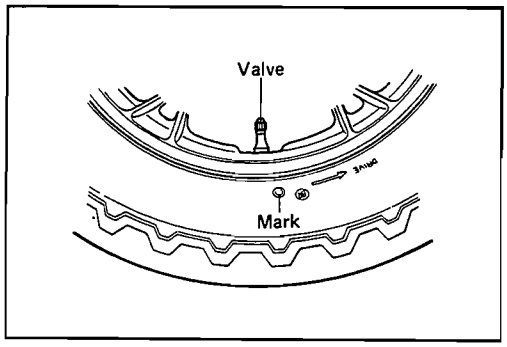

Downloaded from www.Manualslib.com manuals search engine

- Set the bead pushing roller ③.
- Rotate the operation arm around the rim to mount the bead completely. Do the bottom bead first, then the upper bead.
- Remove the wheel from the tire changer, and install the valve core in the valve stem.

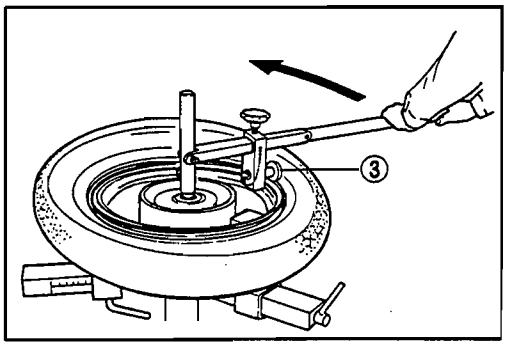

NOTE:
Before installing the valve core, inspect the core.

- Bounce the tire several times while rotating. This makes the tire bead expand outwards, and thus makes inflation easier.

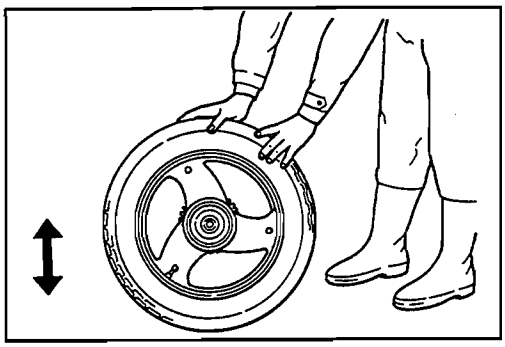

NOTE:
Before inflating, confirm that the balance mark lines up with the valve.

- Pump up the tire with air.

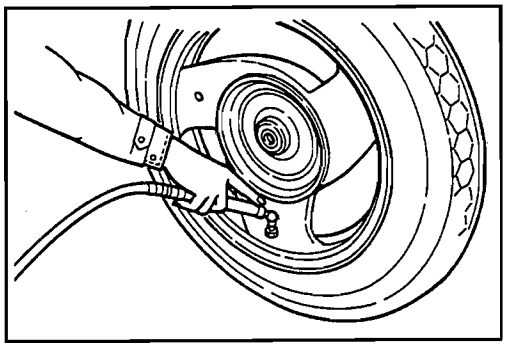

WARNING:
Do not inflate the tire to more than 400 kPa (4.0 kg/cm^2, 56 psi). The tire could burst with sufficient force to cause severe injury. Never stand directly over the tire while inflating it.

NOTE:
Check the "rim line" cast on the tire side walls. It must be equidistant from the wheel rim all the way around. If the distance between the rim line and wheel rim varies, this indicates that the bead is not properly seated. If this is so, deflate the tire completely, and unseat the bead for both sides. Coat the bead with lubricant, and try again.

- After tire is properly seated to the wheel rim, adjust the air-pressure to the recommended pressure. Correct the wheel balance if necessary.

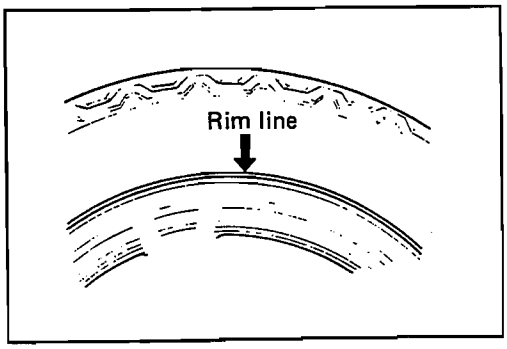

WARNING:
* **Do not run a repaired tire more than 50 km/h (30 mph) within 24 hours after tire repairing, since the patch may not be completely cured.**
* **Do not exceed 130 km/h (80 mph) with a repaired tire.**

Downloaded from www.Manualslib.com manuals search engine

REAR SUSPENSION

SWINGARM

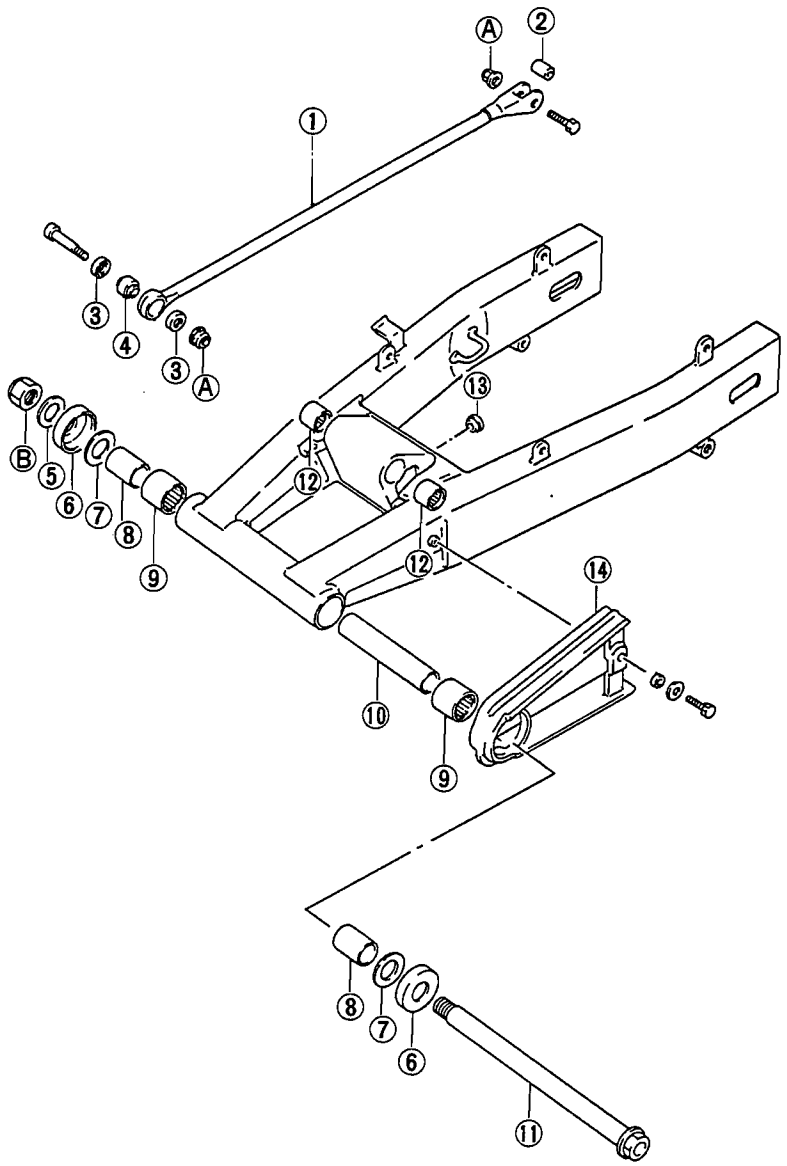

① Torque link
② Spacer
③ Dust seal
④ Bearing
⑤ Washer
⑥ Dust seal
⑦ Washer
⑧ Spacer
⑨ Bearing
⑩ Spacer
⑪ Pivot shaft
⑫ Bearing
⑬ Plug
⑭ Chain buffer
Ⓐ Torque link nut
Ⓑ Swingarm pivot shaft nut

Tightening torque		
Item	N·m	kg·m
Ⓐ	22 – 34	2.2 – 3.4
Ⓑ	85 – 110	8.5 – 11.0

Downloaded from www.Manualslib.com manuals search engine

REAR SHOCK ABSORBER AND REAR CUSHION LEVER SET

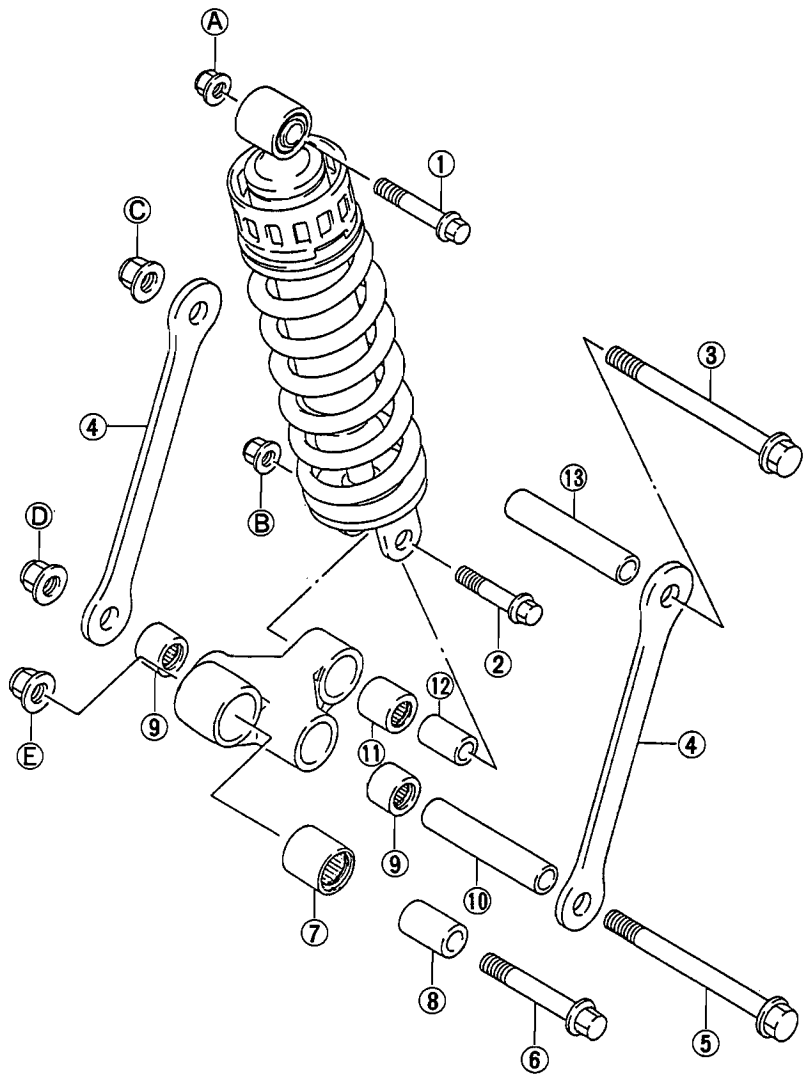

① Shock absorber upper mounting bolt
② Shock absorber lower mounting bolt
③ Bolt
④ Rear cushion rod
⑤ Bolt
⑥ Bolt
⑦ Bearing
⑧ Spacer
⑨ Bearing
⑩ Spacer
⑪ Bearing
⑫ Spacer
⑬ Spacer
Ⓐ Shock absorber upper mounting nut
Ⓑ Shock absorber lower mounting nut
Ⓒ Upper cushion rod nut
Ⓓ Lower cushion rod nut
Ⓔ Cushion lever nut

Tightening torque		
Item	N·m	kg·m
Ⓐ	40 – 60	4.0 – 6.0
Ⓑ	40 – 60	4.0 – 6.0
Ⓒ	70 – 100	7.0 – 10.0
Ⓓ	70 – 100	7.0 – 10.0
Ⓔ	70 – 100	7.0 – 10.0

Downloaded from www.Manualslib.com manuals search engine

REMOVAL AND DISASSEMBLY

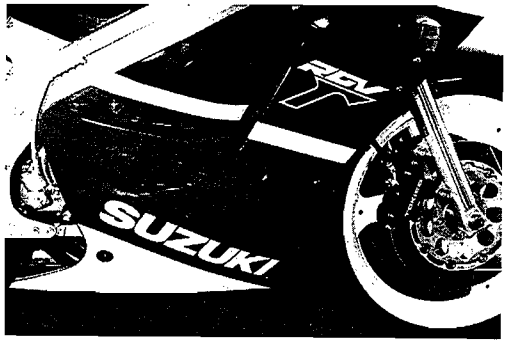

- Remove the seat.
- Remove the right and left mufflers. (Refer to page 3-5.)

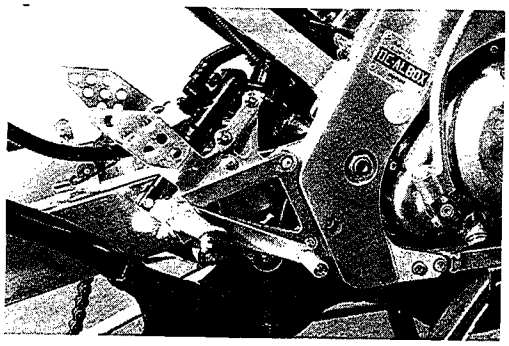

- Remove the rear wheel. (Refer to page 7-29.)
- Remove the lower fender.
- Remove the torque link.

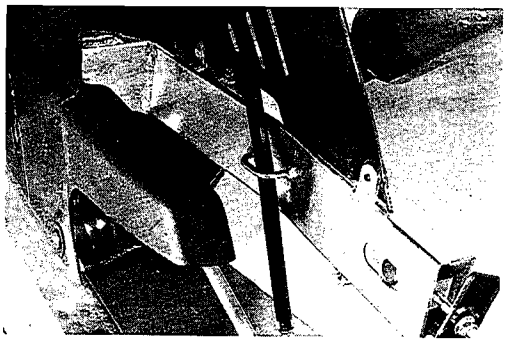

- Remove the rear brake caliper hose union bolt.

CAUTION:
Completely wipe off any brake fluid adhering to any part of motorcycle.
The fluid reacts chemically with paint, plastics, rubber materials, etc.

- Remove the rear brake caliper. (Refer to page 7-22.)

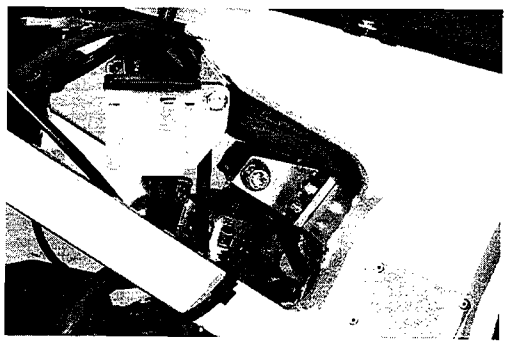

- Remove the shock absorber upper mounting bolt.

Downloaded from www.Manualslib.com manuals search engine

- Loosen the swingarm pivot shaft bolt.

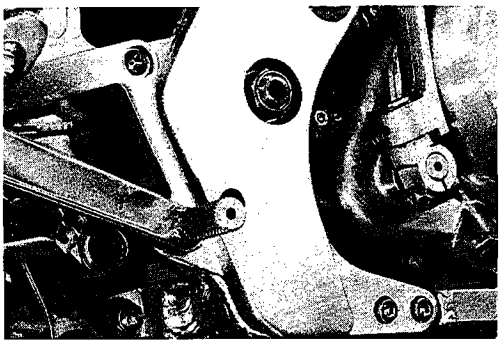

- Remove the cushion lever mounting bolt.

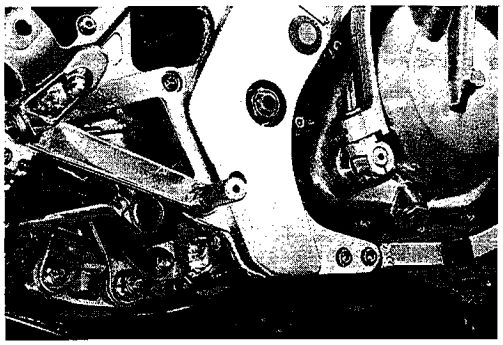

- Remove the rear suspension assembly.
- Remove the shock absorber, cushion lever and cushion rod from swingarm.

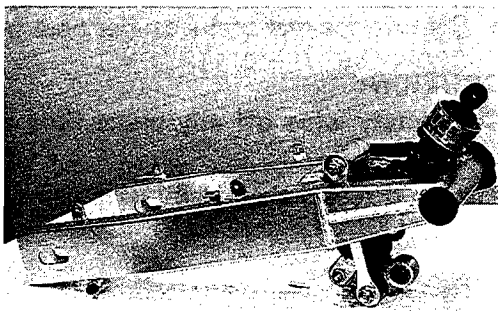

SWINGARM

- Remove the dust seals, washers and spacers from swingarm.

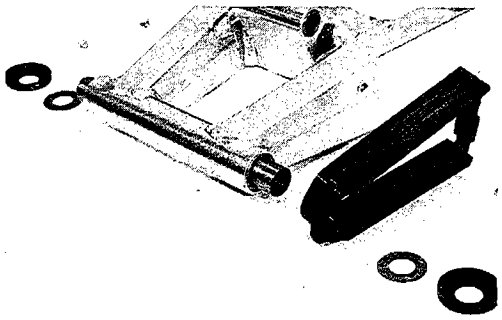

- Draw out the swingarm bearings with a swingarm bearing remover.

09941-44910: Swingarm bearing remover

CAUTION:
The bearings removed should be replaced with new ones.

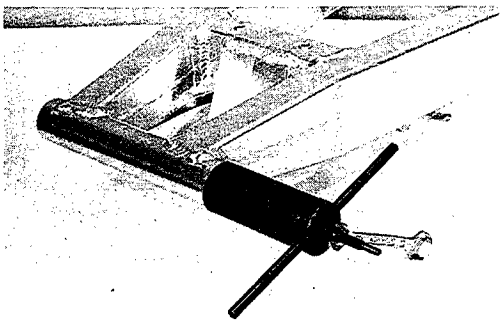

Downloaded from www.Manualslib.com manuals search engine

- Remove the lever spacer.
- Draw out the bearings with the special tools.

09923-73210: Bearing puller (17 mm)

09930-30102: Sliding shaft

CAUTION:
The bearings removed should be replaced with new ones.

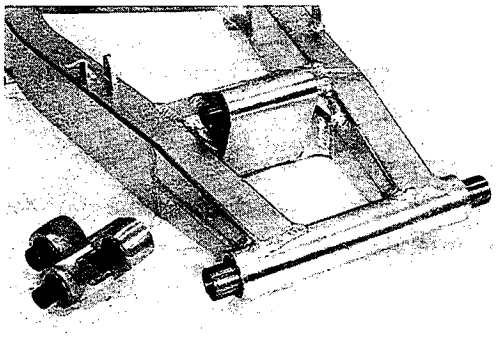

CUSHION LEVER

- Remove the three spacers.

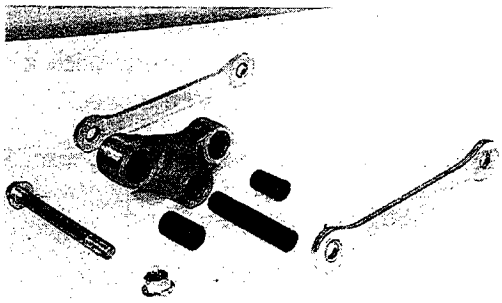

- Draw out the bearings with the special tools.

09943-88210: Bearing installer

09925-98220: Bearing installer

CAUTION:
The bearings removed should be replaced with new ones.

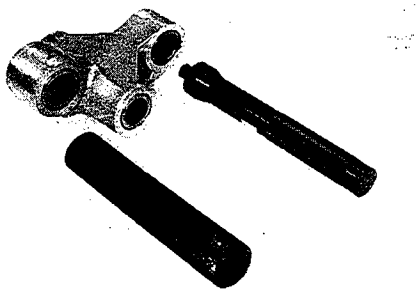

INSPECTION

SWINGARM

Insert the spacer into bearing and check the play by moving the spacer up and down. If excessive play is noted, replace the bearing with a new one.
Inspect the spacer for any flaws or other damage.

CUSHION LEVER

Inspect the spacer for any flaws or other damage.
Inspect the spacer into bearing and check the play by moving the spacer up and down. If an excessive play is noted, replace the bearing with a new one.

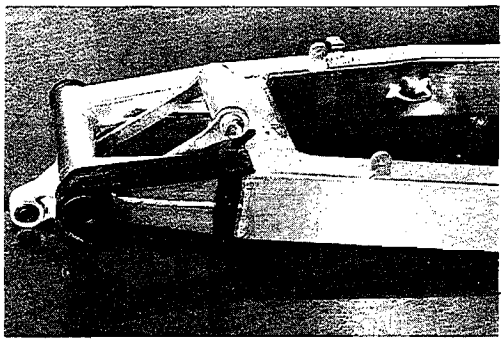

Downloaded from www.Manualslib.com manuals search engine

SHOCK ABSORBER

Inspect the shock absorber for any oil leakage and smooth operation.

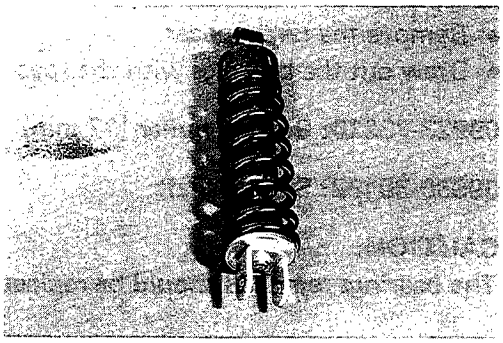

CAUTION:

Do not attempt to disassemble the rear shock absorber unit. It is unserviceable.

SWINGARM PIVOT SHAFT

Check the pivot shaft runout with a dial gauge. If it exceeds the limit, replace with a new one.

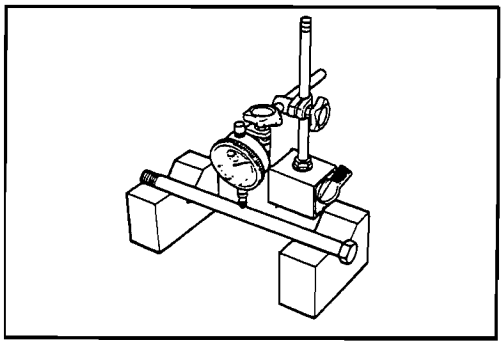

09900-20606: Dial gauge (1/100 mm, 10 mm)

09900-20701: Magnetic stand

09900-21304: V-block (100 mm)

Swingarm pivot shaft runout
Service Limit: 0.3 mm (0.01 in)

Downloaded from www.Manualslib.com manuals search engine

REASSEMBLY AND REMOUNTING

Reassemble and remount the rear suspension in the reverse order of removal and disassembly. Pay attention to the following points:

SWINGARM

- Force-fit the bearings into the swingarm pivot with a steering outer race installer.

09941-34513: Steering outer race installer

NOTE:
When installing the bearings, punch-marked side of bearing comes outside.

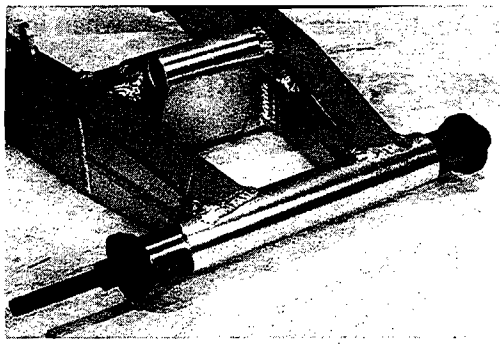

- Apply grease to the spacers and dust seals when installing them.

99000-25010: SUZUKI Super grease "A"

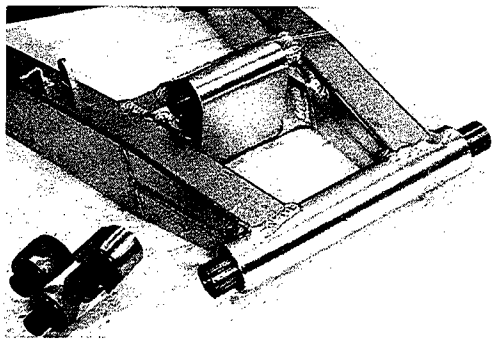

- Force-fit the bearings into the cushion rod upper mounting portion of swingarm with a steering outer race installer.

09943-88210: Bearing installer

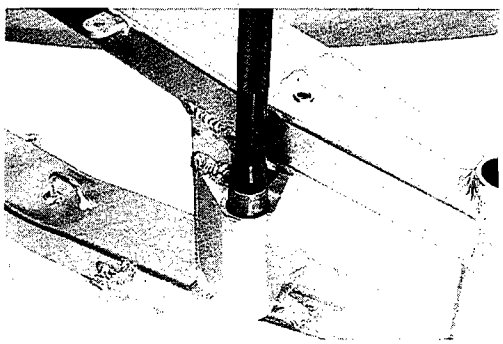

- Apply grease to the spacer when installing it.

99000-25010: SUZUKI Super grease "A"

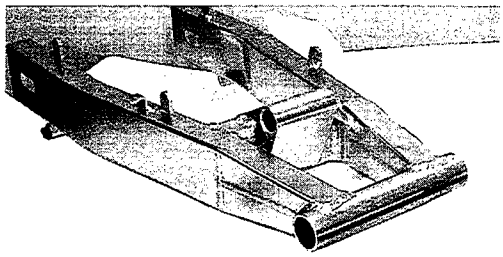

Downloaded from www.Manualslib.com manuals search engine

CUSHION LEVER

- Force-fit the bearings into the cushion lever with a bearing installer.

09924-84510: Bearing installer

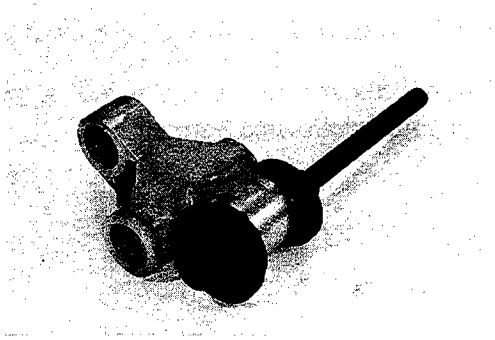

- Apply grease to the spacers when installing them.

99000-25010: SUZUKI Super Grease "A"

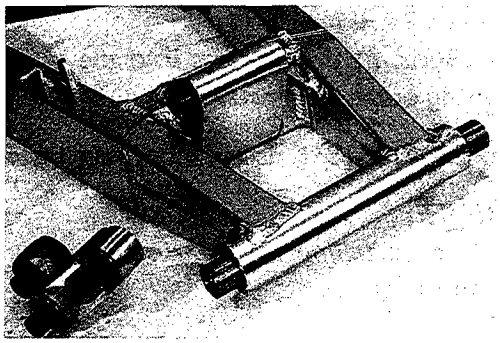

Downloaded from www.Manualslib.com manuals search engine

REASSEMBLY INFORMATION

When reassembling the rear shock absorber and cushion linkage in position, tighten bolts and nuts to the specified torque referring to the following illustration:

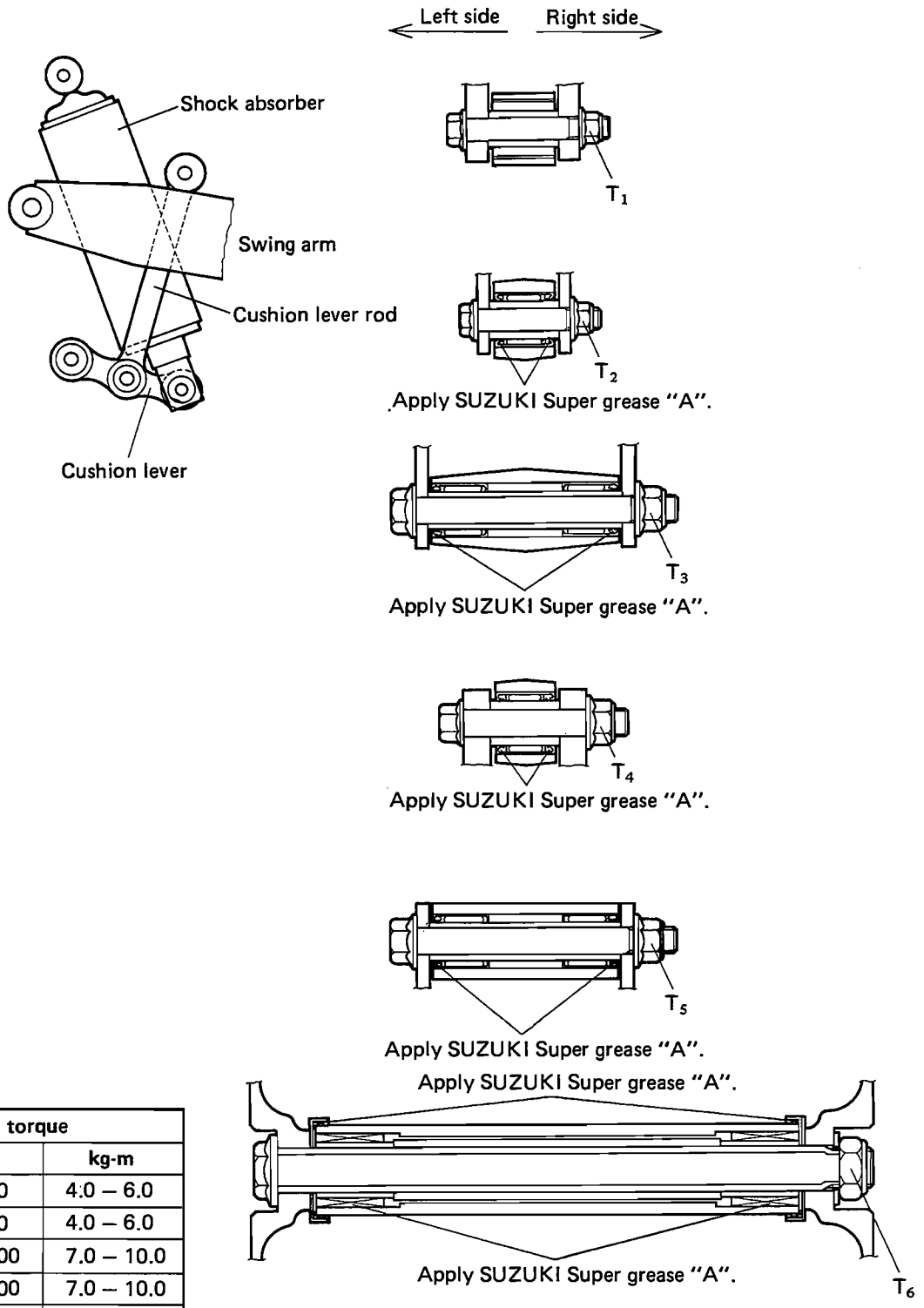

Tighten torque		
Item	N·m	kg-m
T_1	40 – 60	4.0 – 6.0
T_2	40 – 60	4.0 – 6.0
T_3	70 – 100	7.0 – 10.0
T_4	70 – 100	7.0 – 10.0
T_5	70 – 100	7.0 – 10.0
T_6	85 – 115	8.5 – 11.5

Downloaded from www.Manualslib.com manuals search engine

REASSEMBLY ONTO FRAME

- Assemble the rear shock absorber, cushion lever and cushion rods on the swingarm.

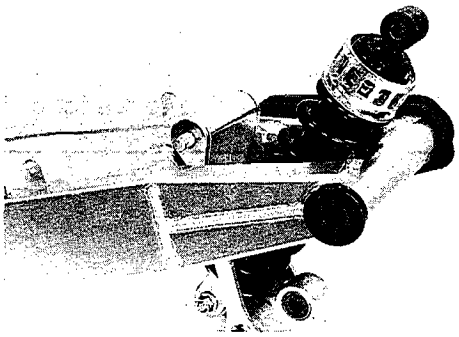

- Install the upper part of rear shock absorber onto frame.

NOTE:
Install the shock absorber with the damping force adjuster located on the left.

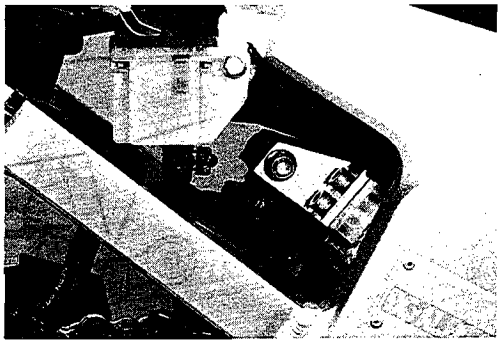

- Install the front of cushion lever onto the frame.

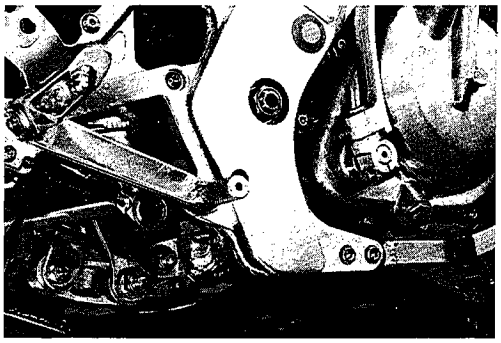

- Install the swingarm onto the frame.

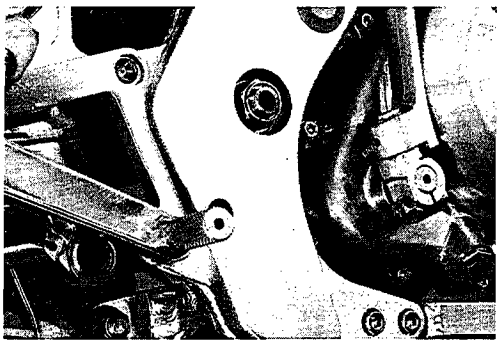

Downloaded from www.Manualslib.com manuals search engine

FINAL INSPECTION AND ADJUSTMENT

After installing the rear suspension and wheel, the following adjustments are required before driving.

- Drive chain (Refer to page 2-10.)
- Rear brake (Refer to page 2-11.)
- Tire pressure (Refer to page 2-14.)
- Chassis bolts and nuts (Refer to page 2-16.)

Downloaded from www.Manualslib.com manuals search engine

Downloaded from www.Manualslib.com manuals search engine

SERVICING INFORMATION

CONTENTS

TROUBLESHOOTING 8- 1
WIRING DIAGRAM 8- 7
CABLE, HARNESS AND HOSE ROUTING 8- 8
SPECIAL TOOLS 8-16
TIGHTENING TORQUE 8-19
SERVICE DATA 8-22

Downloaded from www.Manualslib.com manuals search engine

TROUBLESHOOTING

ENGINE

Complaint	Symptom and possible causes	Remedy
Engine will not start, or is hard to start.	**Compression too low**	
	1. Excessively worn cylinder or piston rings.	Replace.
	2. Stiff piston ring in place.	Repair or replace.
	3. Gas leaks from the joint in crankcase, cylinder or cylinder head.	Repair or replace.
	4. Spark plug too loose.	Tighten.
	5. Broken, cracked or otherwise failed piston.	Replace.
	6. Worn crankshaft oil seal.	Replace.
	Plug not sparking	
	1. Fouled spark plug.	Clean.
	2. Wet spark plug.	Clean and dry.
	3. Defective ignition coil.	Replace.
	4. Open or short in high-tension cord.	Replace.
	5. Defective CDI unit.	Replace.
	No fuel reaching the carburetor	
	1. Clogged air vent hole in the fuel tank cap.	Clean.
	2. Clogged or defective fuel cock.	Clean or replace.
	3. Defective carburetor needle valve.	Replace.
	4. Clogged fuel pipe.	Clean.
Engine stalls easily.	1. Fouled spark plug.	Clean.
	2. Defective CDI unit.	Replace.
	3. Clogged fuel pipe.	Replace.
	4. Clogged jets in carburetor.	Clean.
Noisy engine	**Noise appears to come from piston**	
	1. Piston or cylinder worn down.	Replace.
	2. Combustion chamber fouled with carbon.	Clean.
	3. Piston pin or piston pin bore worn.	Replace.
	4. Piston ring groove worn.	Replace.
	5. Piston pin bearing worn.	Replace.
	Noise seems to come from clutch	
	1. Worn splines of countershaft or hub.	Replace.
	2. Worn teeth of clutch plates.	Replace.
	3. Distorted clutch plates, driven and drive.	Replace.
	Noise seems to come from crankshaft	
	1. Rattling bearings due to wear.	Replace.
	2. Big-end bearings worn and burnt.	Replace.
	3. Crankshaft bearing worn and burnt.	Replace.
	Noise seems to come from transmission	
	1. Gears worn or rubbing.	Replace.
	2. Badly worn splines.	Replace.
	3. Primary gears worn or rubbing.	Replace.
Slipping clutch	1. Clutch control out of adjustment or loss of play.	Adjust.
	2. Weakened clutch springs.	Replace.
	3. Worn or distorted pressure plate.	Replace.
	4. Distorted clutch plates, driven and drive.	Replace.

Downloaded from www.Manualslib.com manuals search engine

Complaint	Symptom and possible causes	Remedy
Dragging clutch	1. Clutch control out of adjustment or too much play. 2. Some clutch springs weakened while others are not. 3. Distorted pressure plate or clutch plates.	Adjust. Replace. Replace.
Transmission will not shift.	1. Broken gearshift cam. 2. Distorted gearshift forks.	Replace. Replace.
Transmission will not shift back.	1. Broken return spring on shift shaft. 2. Shift shafts are rubbing or sticky.	Replace. Repair or replace.
Transmission jumps out of gear.	1. Worn shifting gears on drive shaft or countershaft. 2. Distorted or worn gearshift forks. 3. Weakened stopper spring on gearshift stopper.	Replace. Replace. Replace.
Engine idles poorly.	1. Spark plug gaps too wide. 2. Defective ignition coil. 3. Defective CDI unit. 4. Float-chamber fuel level out of adjustment in carburetor. 5. Clogged jets.	Adjust. Replace. Replace. Adjust. Clean.
Engine runs poorly in high-speed range.	1. Spark plug gaps too narrow. 2. Clogged jets. 3. Defective ignition coil. 4. Defective pick-up coil or CDI unit. 5. Float-chamber fuel level too low. 6. Clogged air cleaner element. 7. Clogged fuel pipe, resulting in inadequate fuel supply to carburetor. 8. Exhaust valve control out of adjustment. 9. Defective exhaust valve control unit, actuator or exhaust valve.	Adjust. Clean. Replace. Replace. Adjust. Clean. Clean, and prime. Adjust. Replace.
Dirty or heavy exhaust smoke.	1. Oil pump out of adjustment. 2. Damaged or worn crankshaft oil seal.	Adjust. Replace.
Engine lacks power.	1. Worn piston rings or cylinder. 2. Spark plug gaps incorrect. 3. Clogged jets in carburetors. 4. Float-chamber fuel level out of adjustment. 5. Clogged air cleaner element. 6. Imbalance of the carburetors. 7. Sucking air from intake pipe. 8. Supplying too much engine oil.	Replace. Adjust or replace. Clean. Adjust. Clean. Adjust. Retighten or replace. Adjust oil pump.
Engine overheats.	1. Heavy carbon deposit on piston crown. 2. Not enough oil supply. 3. Defective oil pump or clogged oil lines. 4. Fuel level too low in float chambers. 5. Sucking air from intake pipes. 6. Using incorrect engine oil. 7. Defective cooling system.	Clean. Adjust oil pump. Replace or clean. Adjust. Retighten or replace. Change. See radiator section.

Downloaded from www.Manualslib.com manuals search engine

CARBURETOR

Complaint	Symptom and possible causes	Remedy
Trouble with starting.	1. Starter jet is clogged. 2. Starter pipe is clogged. 3. Air leaking from a joint between starter body and carburetor. 4. Starter plunger is not operating properly.	Clean. Clean. Check and retighten. Repair.
Idling or low-speed trouble.	1. Pilot jet is clogged or loose. 2. Air leaking from carburetor's S.I.P.C. hose or starter. 3. Pilot outlet or by-pass is clogged. 4. Starter plunger is not fully closed. 5. Imbalance of carburetors.	Check and clean. Check. Check and clean. Check and adjust. Adjust the carburetors.
Medium- or high-speed trouble.	1. Main jet is clogged. 2. Needle jet is clogged. 3. Throttle valve is not operating properly. 4. Filter is clogged.	Check and clean. Check and clean. Check throttle valve for operation. Check and clean.
Overflow and fuel level fluctuations.	1. Needle valve is worn or damaged. 2. Float is not working properly. 3. Foreign matter has adhered to needle valve. 4. Fuel level is too high or low. 5. Clogged carburetor air vent pipe. 6. Spring in needle valve is broken.	Replace. Check and adjust. Clean. Adjust float height. Clean. Replace.

RADIATOR

Complaint	Symptom and possible causes	Remedy
Engine overheats.	1. Not enough cooling water. 2. Radiator core is clogged with dirt or trashes. 3. Erratic thermostat, stuck in closed position. 4. Clogged water passage. 5. Air trapped in the cooling circuit. 6. Defective water pump. 7. Incorrect cooling water used.	Add. Clean. Replace. Clean. Bleed out air. Replace. Change.
Engine overcools.	1. Erratic thermostat, stuck in full-open position. 2. Extremely cold weather.	Replace. Put on the radiator cover.

Downloaded from www.Manualslib.com manuals search engine

ELECTRICAL

Complaint	Symptom and possible causes	Remedy
No sparking or poor sparking.	1. Defective ignition coil. 2. Defective spark plugs. 3. Defective pick-up coil or CDI unit.	Replace. Replace. Replace.
Spark plugs soon becomes fouled with carbon.	1. Mixture too rich. 2. Idling speed set too high. 3. Incorrect gasoline. 4. Dirty element in air cleaner. 5. Spark plugs too cold.	Adjust carburetor. Adjust carburetor. Change. Clean. Replace by hot type plug.
Spark plugs become fouled too soon.	1. Worn piston rings. 2. Piston or cylinder worn.	Replace. Replace.
Spark plug electrodes overheat or burn.	1. Spark plug too hot. 2. The engine overheats. 3. Spark plug loose. 4. Mixture too lean.	Replace by cold type plug. Tune up. Retighten. Adjust carburetors.
Generator does not charge.	1. Open or short in lead wires, or loose lead connections. 2. Shorted, grounded or open generator coils. 3. Shorted or punctured regulator/rectifier.	Repair or replace or retighten. Replace. Replace.
Generator charges, but charging rate is below the specification.	1. Lead wires tend to get shorted or open-circuited or loosely connected at terminals. 2. Grounded or open-circuited stator coils of generator. 3. Defective regulator/rectifier. 4. Defective battery.	Repair or retighten. Replace. Replace. Replace.
Generator overcharges.	1. Internal short-circuit in the battery. 2. Regulator/rectifier damaged or defective. 3. Regulator/rectifier poorly grounded.	Replace the battery. Replace. Clean and tighten ground connection.
Unstable charging.	1. Lead wire insulation frayed due to vibration, resulting in intermittent shorting. 2. Generator internally shorted. 3. Defective regulator/rectifier.	Repair or replace. Replace. Replace.

Downloaded from www.Manualslib.com manuals search engine

BATTERY

Complaint	Symptom and possible causes	Remedy
Battery runs down quickly.	1. The charging system is defective.	Check the generator, regulator/rectifier and circuit connections, and make necessary adjustments to obtain specified charging operation.
	2. Cell plates have lost much of their active material as a result of over-charging.	Replace the battery, and correct the charging system.
	3. A short-circuit condition exists within the battery due to excessive accumulation of sediments caused by the incorrect electrolyte.	Replace the battery.
	4. Battery is too old.	Replace the battery.
Reversed battery polarity.	The battery has been connected the wrong way round in the system, so that it is being charged in the reverse direction.	Replace the battery and be sure to connect the battery properly.
Battery discharges too rapidly.	1. Dirty container top and sides.	Clean.
	2. Battery is too old.	Replace.

BRAKES

Complaint	Symptom and possible causes	Remedy
Insufficient brake power.	1. Leakage of brake fluid from hydraulic system.	Repair or replace.
	2. Worn pads.	Replace.
	3. Oil adhesion on engaging surface of pads.	Clean disc and pads.
	4. Worn disc.	Replace.
	5. Air in hydraulic system.	Bleed air.
Brake squeaking.	1. Glazed pad surface.	Repair surface with sandpaper.
	2. Tilted pad.	Modify pad fitting.
	3. Damaged wheel bearing.	Replace.
	4. Loose front-wheel axle or rear-wheel axle.	Tighten to specified torque.
	5. Worn pads.	Replace.
	6. Foreign material in brake fluid.	Replace brake fluid.
	7. Clogged return port of master cylinder.	Disassemble and clean master cylinder.
Excessive brake lever stroke.	1. Air in hydraulic system.	Bleed air.
	2. Insufficient brake fluid.	Replenish fluid to specified level; bleed air.
	3. Improper quality of brake fluid.	Replace with correct fluid.
Leakage of brake fluid.	1. Insufficient tightening of connection joints.	Tighten to specified torque.
	2. Cracked hose.	Replace.
	3. Worn piston and/or cup.	Replace piston and/or cup.

Downloaded from www.Manualslib.com manuals search engine

CHASSIS

Complaint	Symptom and possible causes	Remedy
Heavy steering.	1. Steering stem nut overtightened. 2. Broken bearing in steering stem. 3. Distorted steering stem. 4. Not enough pressure in tires.	Adjust. Replace. Replace. Adjust.
Wobbly handle.	1. Loss of balance between right and left front forks. 2. Distorted front fork. 3. Distorted front axle or crooked tire.	Adjust. Replace. Replace.
Wobbly front wheel.	1. Distorted wheel rim. 2. Worn-down front wheel bearings. 3. Defective or incorrect tire. 4. Loose nut on axle. 5. Incorrect front fork oil.	Replace. Replace. Replace. Retighten. Adjust.
Front suspension too soft.	1. Weakened springs. 2. Not enough fork oil.	Replace. Refill.
Front suspension too stiff.	1. Fork oil too viscous. 2. Too much fork oil.	Replace. Drain excess oil.
Noisy front suspension.	1. Not enough fork oil. 2. Loosen nuts on suspension.	Refill. Retighten.
Wobbly rear wheel.	1. Distorted wheel rim. 2. Worn-down rear wheel bearings or swingarm bearings. 3. Defective or incorrect tire. 4. Worn swingarm and rear cushion related bearings. 5. Loose nuts or bolts on rear suspension.	Replace. Replace. Replace. Replace. Retighten.
Rear suspension too soft.	1. Weakened shock absorber spring. 2. Rear suspension adjuster improperly set. 3. Oil leakage of shock absorber.	Replace. Adjust. Replace.
Rear suspension too stiff.	1. Rear suspension adjuster improperly set. 2. Shock absorber shaft bent. 3. Swingarm bent. 4. Worn swingarm and rear cushion related bearings.	Adjust. Replace. Replace. Replace.
Noisy rear suspension.	1. Loose nuts or bolts on rear suspension. 2. Worn swingarm and rear cushion related bearings.	Retighten. Replace.

Downloaded from www.Manualslib.com manuals search engine

WIRING DIAGRAM

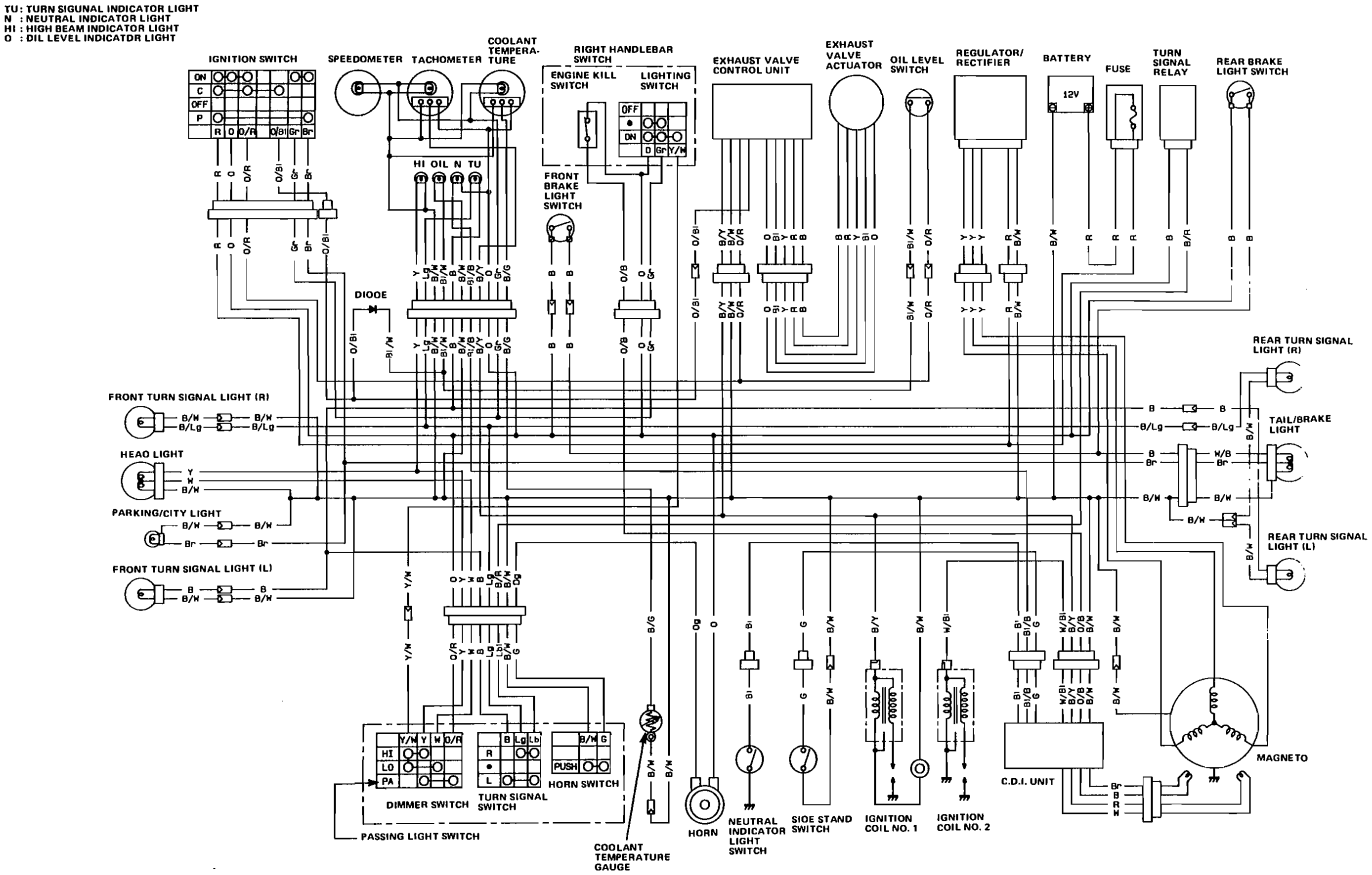

WIRE COLOR

B	Black	Lg	Light green	B/Lg . .	Black with Light green tracer	Bl/W . . .	Blue with White tracer
Bl	Blue	O	Orange	B/G . . .	Black with Green tracer	O/B . . .	Orange with Black tracer
Br	Brown	R	Red	B/R . . .	Black with Red tracer	O/Bl . . .	Orange with Blue tracer
G	Green	W	White	B/W . . .	Black with White tracer	O/R . . .	Orange with Red tracer
Gr	Gray	Y	Yellow	B/Y . . .	Black with Yellow tracer	W/B . . .	White with Black tracer
Lbl	Sky blue	Dg	Dark green	Bl/B . . .	Blue with Black tracer	W/Bl . . .	White with Blue tracer
						Y/W . . .	Yellow with White tracer

Downloaded from www.Manualslib.com manuals search engine

WIRE HARNESS

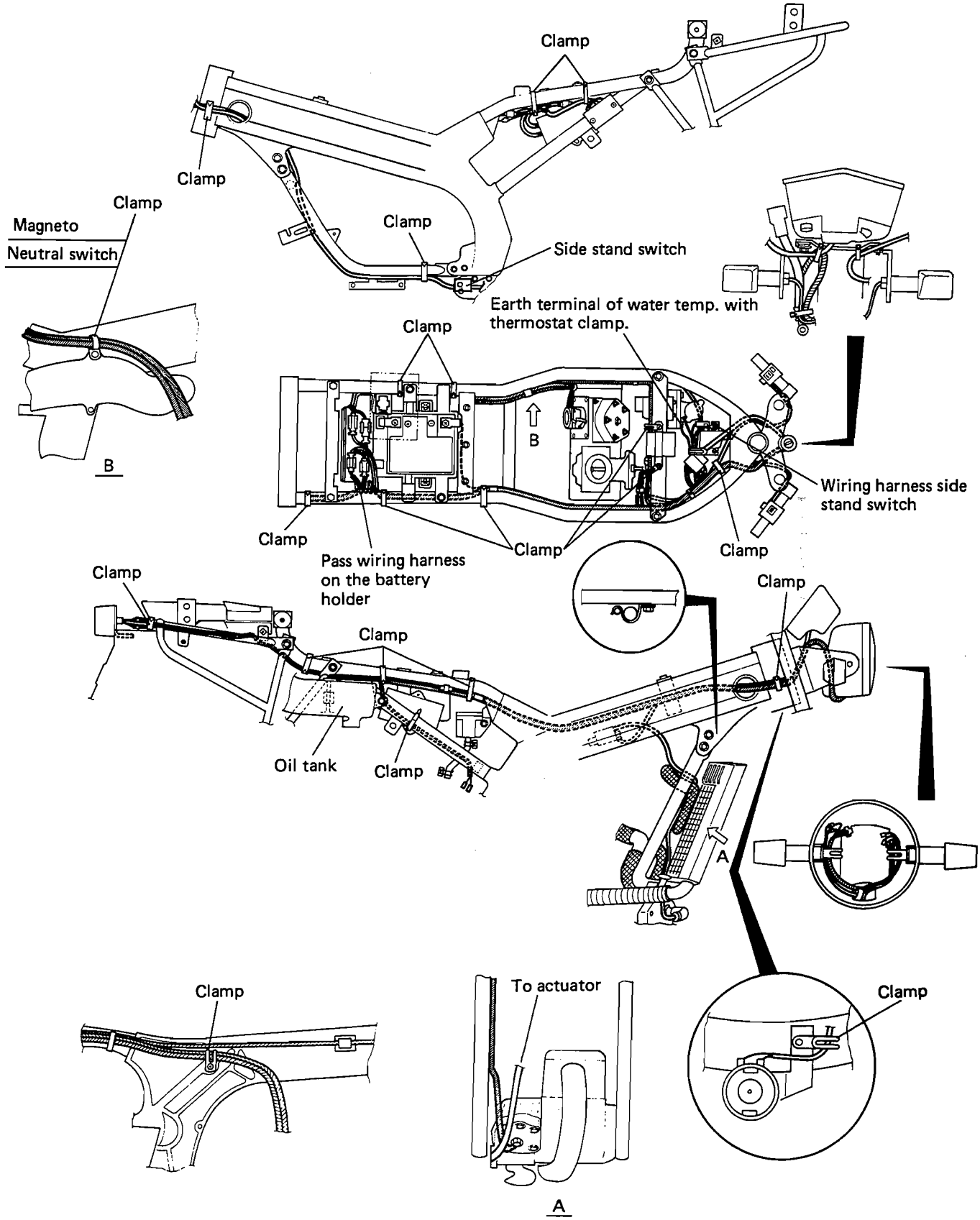

Downloaded from www.Manualslib.com manuals search engine

CABLE ROUTING

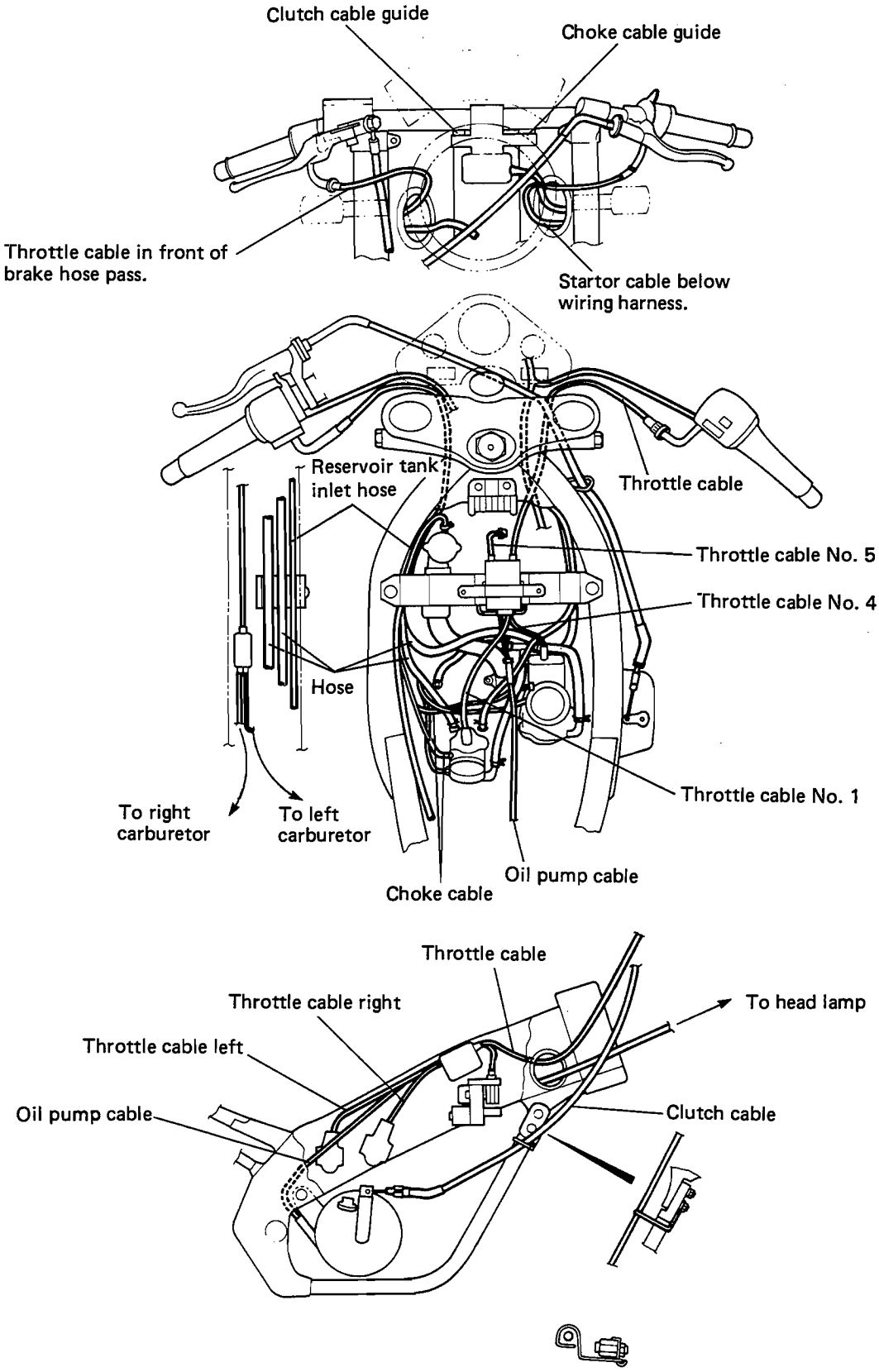

Downloaded from www.Manualslib.com manuals search engine

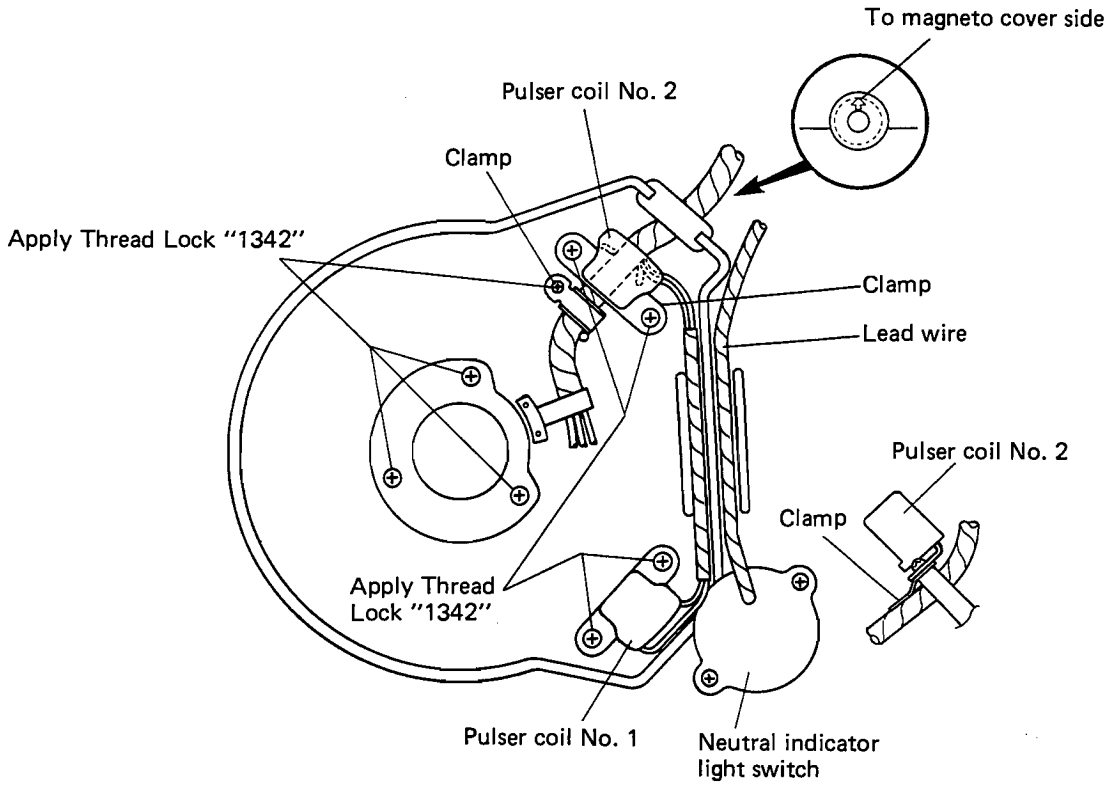

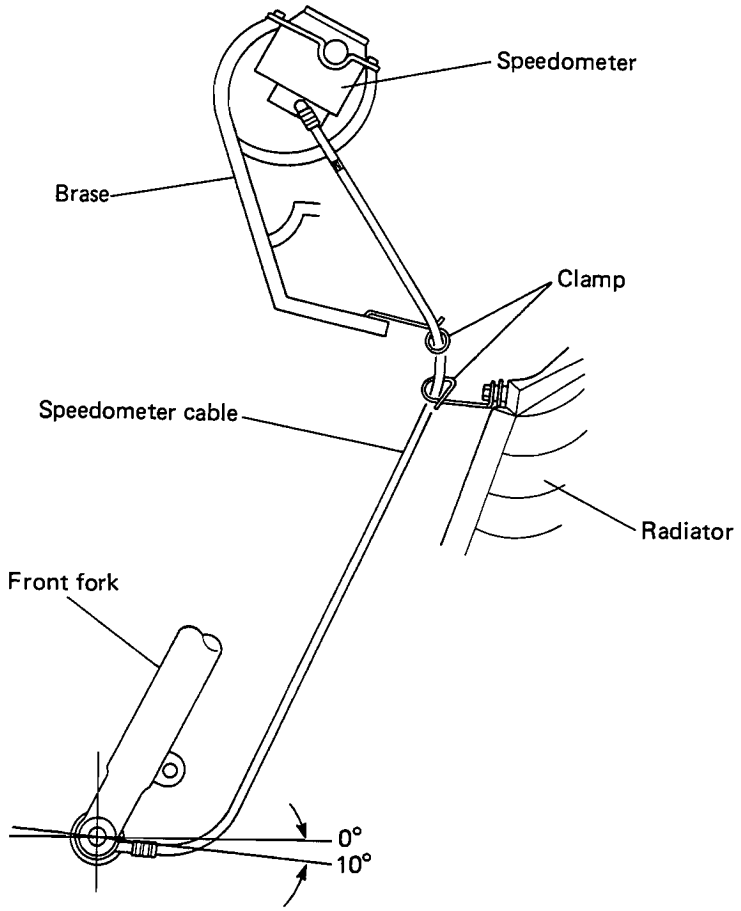

Downloaded from www.Manualslib.com manuals search engine

HOSE ROUTING

WATER HOSE ROUTING

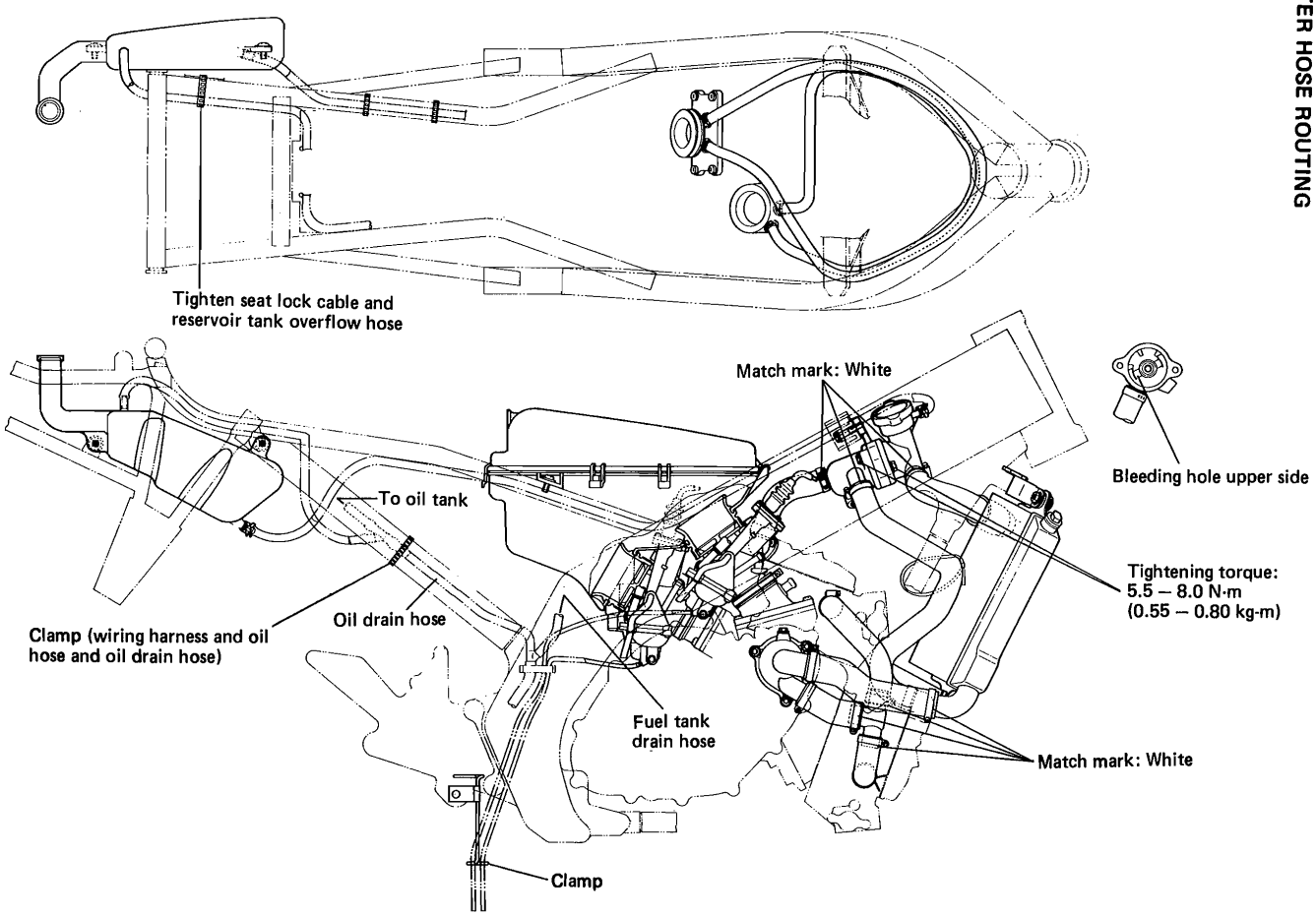

Downloaded from www.Manualslib.com manuals search engine

FUEL AND BREATHER HOSE ROUTING

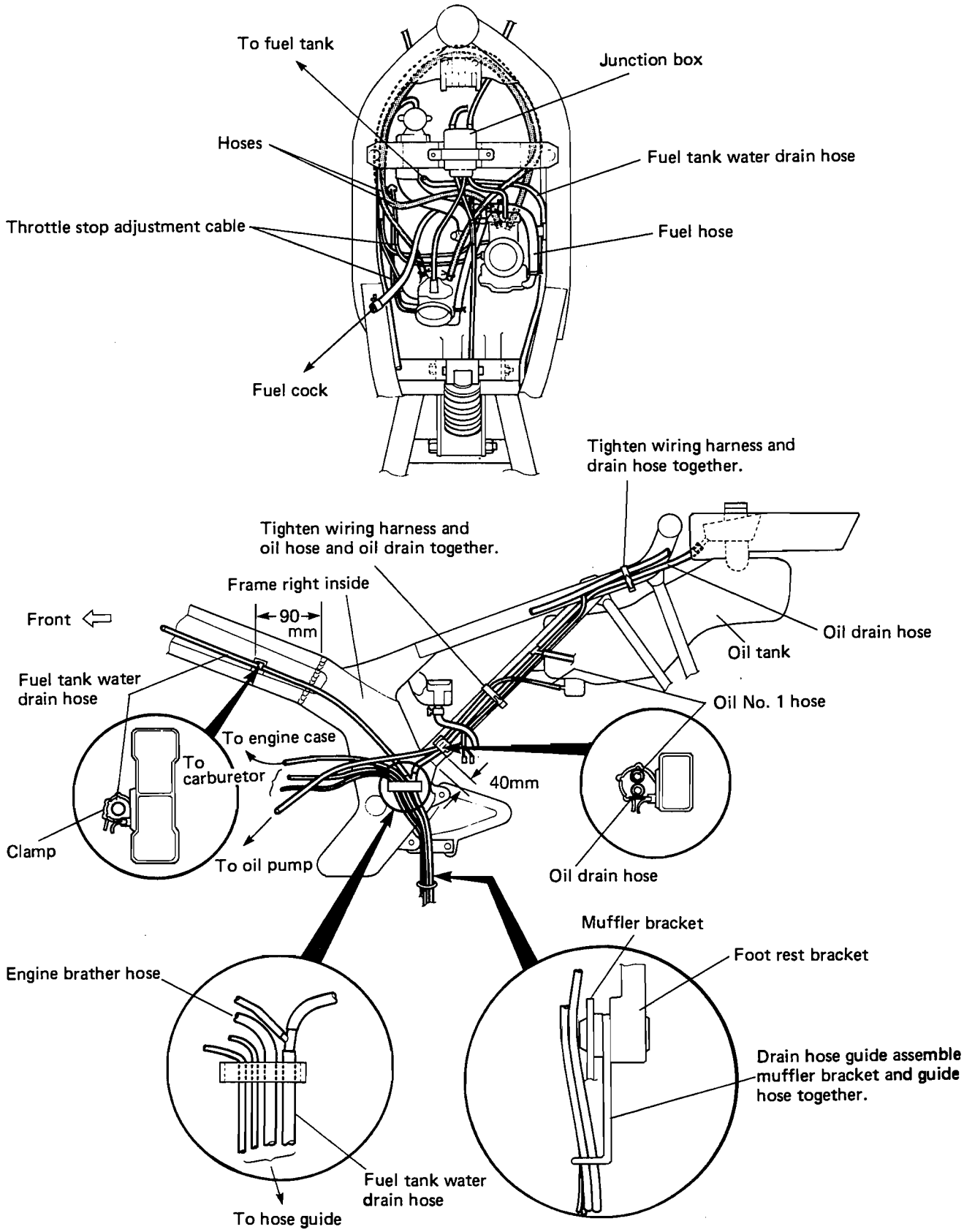

Downloaded from www.Manualslib.com manuals search engine

OIL HOSE ROUTING

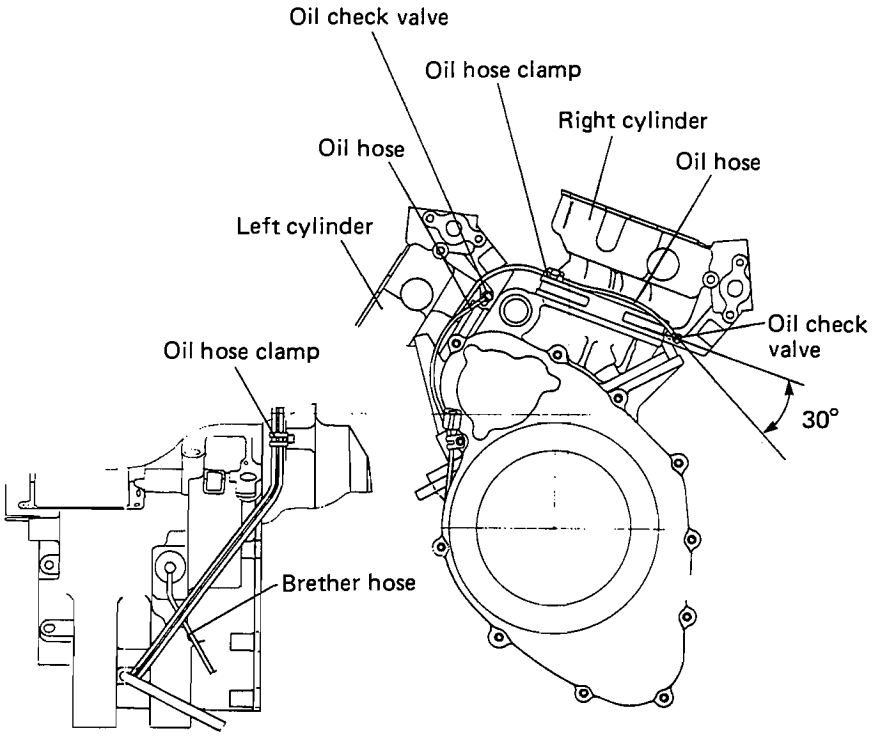

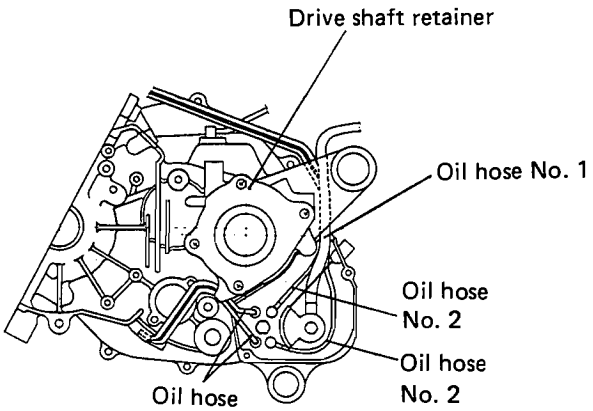

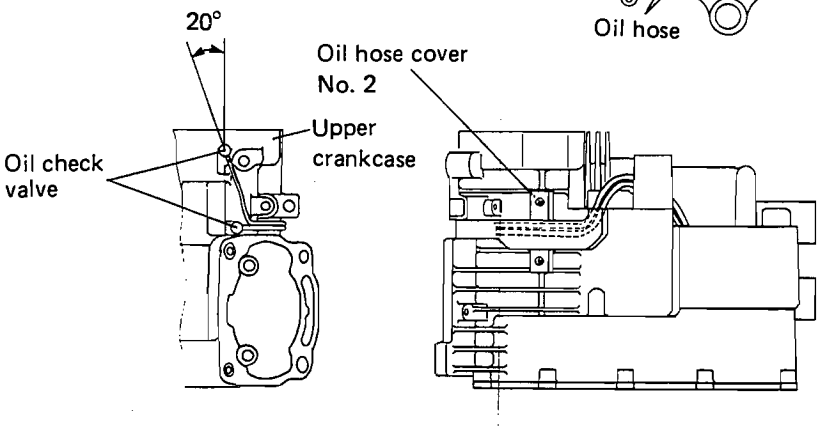

Downloaded from www.Manualslib.com manuals search engine

FUEL TANK HOSE ROUTING

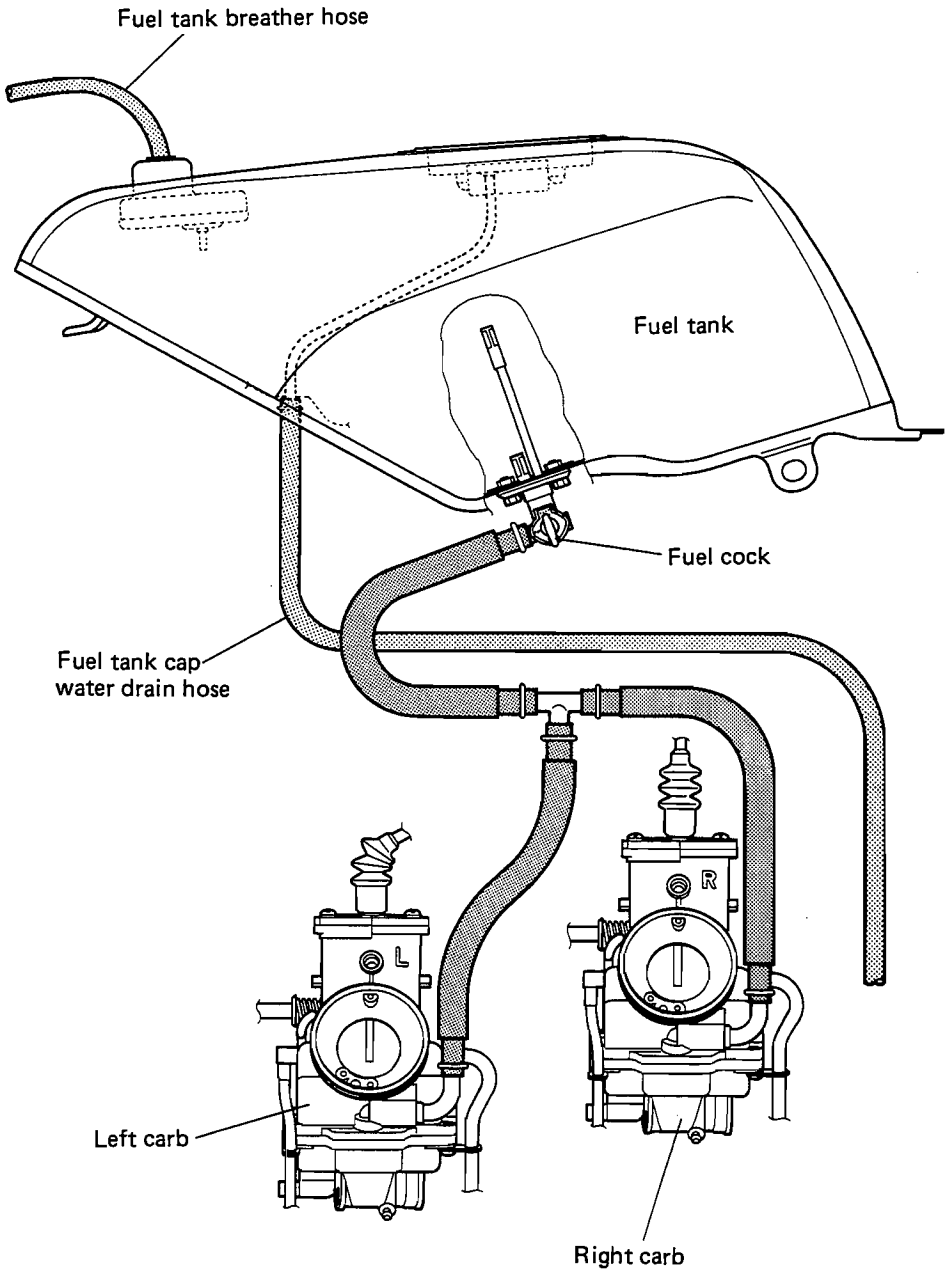

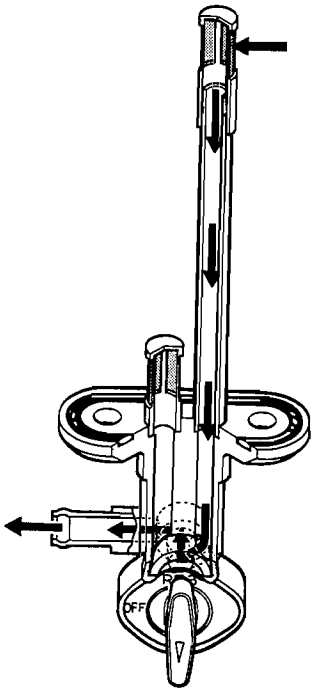

"ON" position

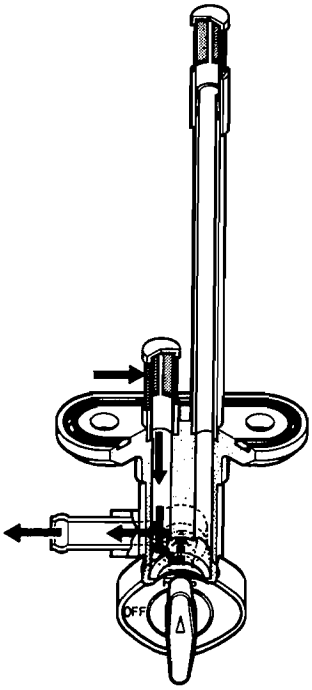

"RES" position

Downloaded from www.Manualslib.com manuals search engine

FRONT AND REAR HOSE ROUTING

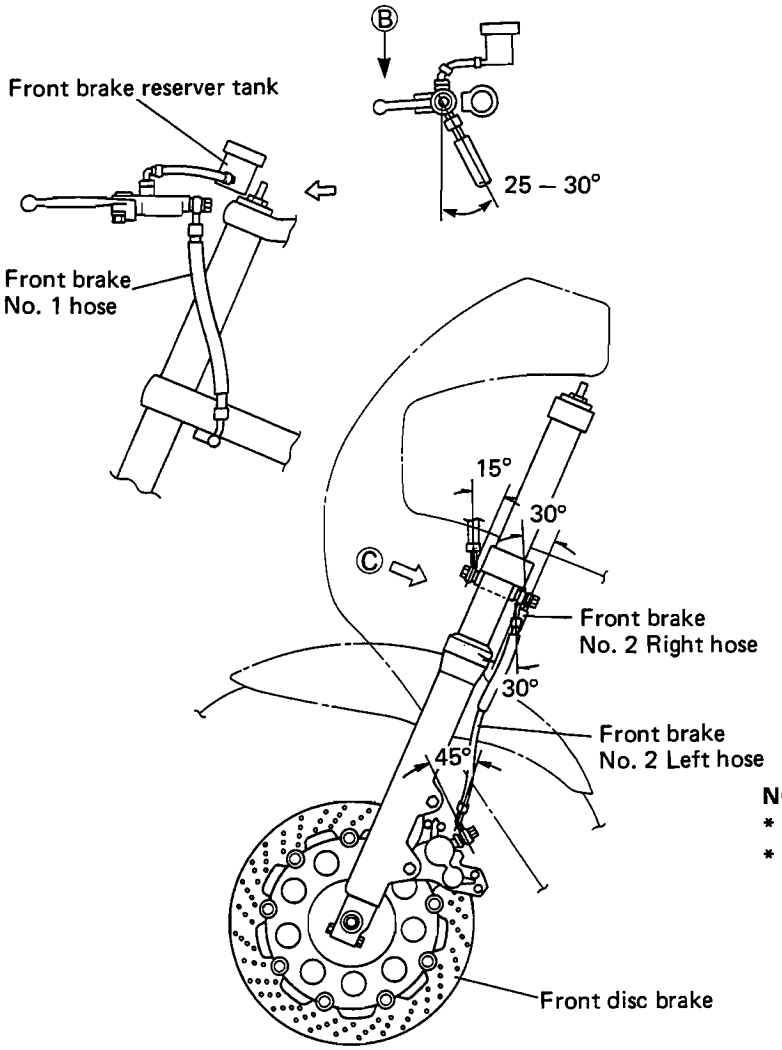

NOTE:

* **Do not twist the hose when installed.**
* **Turn the hose fitting all the way until it stops with the stopper to locate it in the correct angle while tightening.**

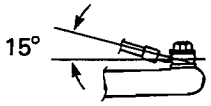

NOTE:

* **Do not twist the hose when installed.**
* **Turn the hose fitting all the way until it stops with the stopper to locate it the correct angle while tightening.**

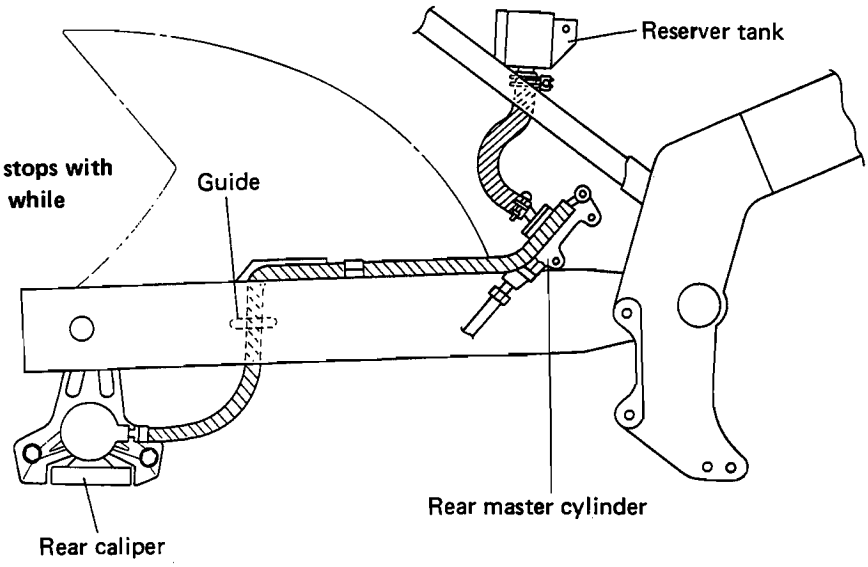

Downloaded from www.Manualslib.com manuals search engine

SPECIAL TOOLS

09900-00401 "L" type hexagon wrench set	09900-00410 Hexagon wrench set	09900-06105 Snap ring pliers	09900-06107 Snap ring pliers	09900-06108 Snap ring pliers
09900-09003 Impact driver set	09900-20102 Vernier calipers (1/20 mm, 200 mm)	09900-20202 Micrometer (1/100 mm, 25-50 mm)	09900-20203 Micrometer (1/100 mm, 50-75 mm	09900-20205 Micrometer (1/1 000 mm, 0-25 mm)
09900-20508 Cylinder gauge set (1/100 mm, 40-80 mm)	09900-20602 Dial gauge (1/1 000 mm, 1 mm)	09900-20605 Dial calipers (1/100 mm, 10-34 mm)	09900-20606 Dial gauge (1/100 mm, 10 mm)	09900-20701 Magnetic stand
09900-20702 Micrometer stand	09900-20804 Thickness gauge	09900-20805 Tire depth gauge	09900-21304 V-block set (100 mm)	09900-21602 CCI oil gauge
09900-22403 Small bore gauge (18-35 mm)	09900-25002 Pocket tester	09900-26006 Engine tachometer	09900-28107 Electro tester	09910-10110 Stud bolt installer (6 mm)
09910-11510 Stud bolt installer (10 mm)	09910-20115 Conrod stopper	09910-34510 Piston pin puller	09930-40113 Rotor holder	09910-60611 Universal clamp wrench

Downloaded from www.Manualslib.com manuals search engine

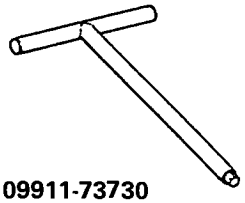 09911-73730 "T" type hexagon wrench (5 mm)	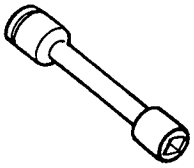 09911-74510 Long socket (14 mm)	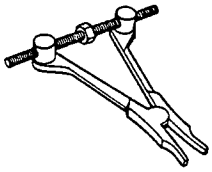 09912-34510 Cylinder disassembler	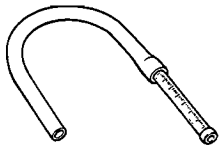 09913-10730 Fuel level gauge	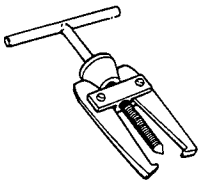 09913-60910 Bearing puller (40-60 mm)
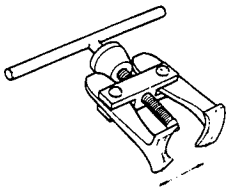 09913-61510 Bearing puller (80 mm)	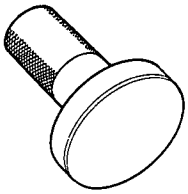 09913-75520 Bearing installer	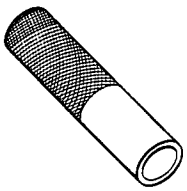 09913-80112 Bearing installer	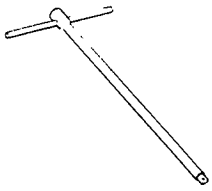 09914-24510 T-handle	09914-25811 "T" type hexagon wrench (6 mm)
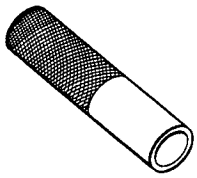 09914-79610 Bearing and oil seal installer	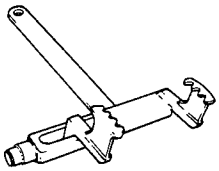 09920-53710 Clutch sleeve hub holder	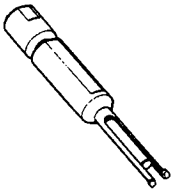 09921-20200 Bearing remover	09923-73210 Bearing puller (17-20 mm)	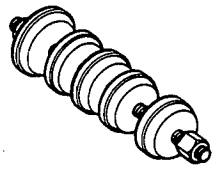 09924-84510 Bearing installer set
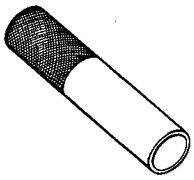 09925-98220 Bearing installer	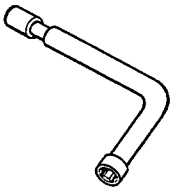 09930-11910 Torx wrench	09930-14530 Universal joint	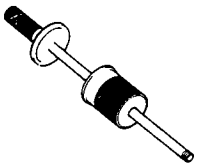 09930-30102 Sliding shaft	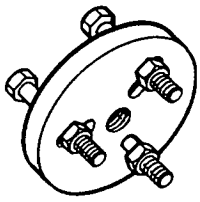 09930-30190 Attachment F
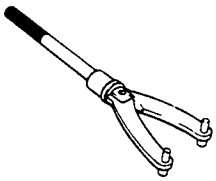 09930-40113 Rotor holder	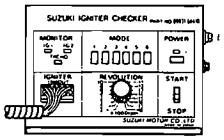 09931-64410 Ignitor checker (Digital type)	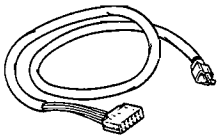 09931-64480 Pei test lead	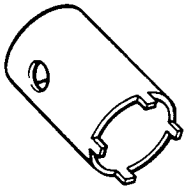 09940-14911 Steering stem nut wrench	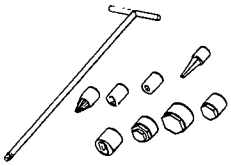 09940-34515 Front fork assembling tool
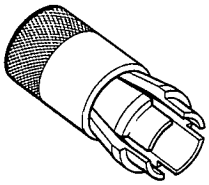 09940-50112 Front fork oil seal installer	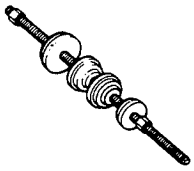 09941-34513 Steering outer race installer	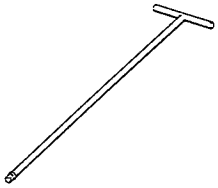 09940-34520 "T" handle	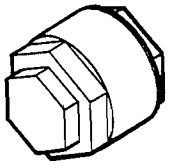 09940-34581 Attachment F	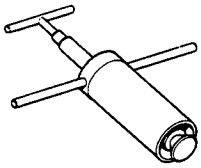 09941-44910 Swingarm bearing remover

Downloaded from www.Manualslib.com manuals search engine

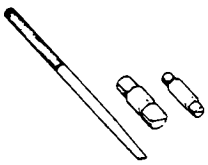 09941-50110 Bearing remover	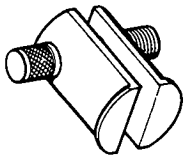 09941-54911 Bearing outer race remover	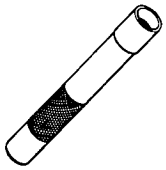 09941-74910 Steering bearing installer	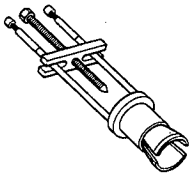 09941-84510 Bearing remover	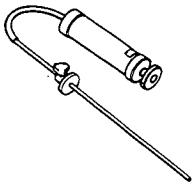 09943-74111 Front fork oil level gauge
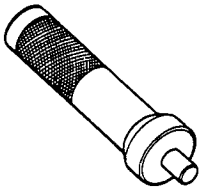 09943-88211 Bearing installer				

Downloaded from www.Manualslib.com manuals search engine

TIGHTENING TORQUE

ENGINE

Item		N·m	kg-m
Transmission oil drain plug	14 mm	20 – 25	2.0 – 2.5
Coolant drain plug		8 – 12	0.8 – 1.2
Exhaust pipe clamp nut		18 – 28	1.8 – 2.8
Muffler mounting bolt		18 – 28	1.8 – 2.8
Engine mounting nut	10 mm	60 – 72	6.0 – 7.2
	8 mm	28 – 34	2.8 – 3.4
Engine mounting bracket bolt		18 – 28	1.8 – 2.8
Down tube		22 – 28	2.2 – 2.8
Kick starter lever bolt		18 – 28	1.8 – 2.8
Cylinder head nut		23 – 27	2.3 – 2.7
Cylinder nut		23 – 27	2.3 – 2.7
Crankcase bolt	6 mm	9 – 13	0.9 – 1.3
	8 mm	20 – 24	2.0 – 2.4
Gearshift arm stopper		15 – 23	1.5 – 2.3
Primary drive gear nut		60 – 80	6.0 – 8.0
Water pump cover bolt		6 – 10	0.6 – 1.0
Transmission cover nut		8 – 12	0.8 – 1.2
Clutch sleeve hub nut		40 – 60	4.0 – 6.0
Clutch spring bolt		8 – 12	0.8 – 1.2
Clutch cover bolt		6 – 10	0.6 – 1.0
Magneto rotor nut		85 – 105	8.5 – 10.5
Water pump impeller bolt		7 – 9	0.7 – 0.9
Water temp gauge		6 – 10	0.6 – 1.0
Radiator mounting nut		7 – 9	0.7 – 0.9
Carburetor mounting bolt		7 – 9	0.7 – 0.9

Downloaded from www.Manualslib.com manuals search engine

CHASSIS

Item	N·m	kg-m
Steering stem head nut	60 – 100	6.0 – 10.0
Handlebars set bolt	6 – 10	0.6 – 1.0
Front fork upper clamp bolt	15 – 25	1.5 – 2.5
Front fork lower clamp bolt	15 – 25	1.5 – 2.5
Front fork cap bolt	15 – 30	1.5 – 3.0
Front axle shaft	50 – 80	5.0 – 8.0
Front axle clamp bolt	15 – 25	1.5 – 2.5
Handlebars mounting bolt	15 – 25	1.5 – 2.5
Front brake master cylinder mounting bolt	5 – 8	0.5 – 0.8
Front caliper mounting bolt	25 – 40	2.5 – 4.0
Front caliper housing bolt	18 – 23	1.8 – 2.3
Brake hose union bolt	15 – 20	1.5 – 2.0
Air bleeder valve (Front and rear)	6 – 9	0.6 – 0.9
Front and rear disc bolt	15 – 25	1.5 – 2.5
Swingarm pivot nut	85 – 110	8.5 – 11.0
Rear brake rod lock nut	15 – 25	1.5 – 2.5
Rear shock absorber mounting nut (Upper and lower)	40 – 60	4.0 – 6.0
Rear cushion lever nut	70 – 100	7.0 – 10.0
Rear cushion rod nut (Upper and Lower)	70 – 100	7.0 – 10.0
Rear caliper housing bolt	18 – 23	1.8 – 2.3
Rear torque link nut (Front and rear)	22 – 34	2.2 – 3.4
Rear master cylinder mounting bolt	8 – 12	0.8 – 1.2
Rear axle nut	85 – 115	8.5 – 11.5
Rear sprocket nut	20 – 30	2.0 – 3.0
Front footrest bolt	15 – 25	1.5 – 2.5
Rear brake master cylinder hose union bolt	15 – 20	1.5 – 2.0
Rear brake caliper hose union bolt	20 – 25	2.0 – 2.5

Downloaded from www.Manualslib.com manuals search engine

TIGHTENING TORQUE CHART

For other bolts and nuts not listed in the previous page, refer to this chart:

Tightening torque

Bolt Diameter Ⓐ (mm)	Conventional or "4" marked bolt		"7" marked bolt	
	N·m	kg-m	N·m	kg-m
4	1 – 2	0.1 – 0.2	1.5 – 3	0.15 – 0.3
5	2 – 4	0.2 – 0.4	3 – 6	0.3 – 0.6
6	4 – 7	0.4 – 0.7	8 – 12	0.8 – 1.2
8	10 – 16	1.0 – 1.6	18 – 28	1.8 – 2.8
10	22 – 35	2.2 – 3.5	40 – 60	4.0 – 6.0
12	35 – 55	3.5 – 5.5	70 – 100	7.0 – 10.0
14	50 – 80	5.0 – 8.0	110 – 160	11.0 – 16.0
16	80 – 130	8.0 – 13.0	170 – 250	17.0 – 25.0
18	130 – 190	13.0 – 19.0	200 – 280	20.0 – 28.0

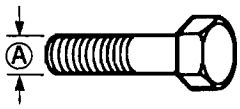

Conventional bolt

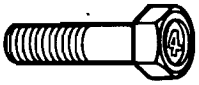

"4" marked bolt

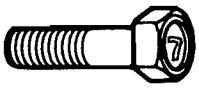

"7" marked bolt

Downloaded from www.Manualslib.com manuals search engine

SERVICE DATA

CYLINDER + PISTON + PISTON RING

Unit: mm (in)

ITEM	STANDARD			LIMIT
Piston to cylinder clearance	0.060 – 0.090 (0.0023 – 0.0035)			0.120 (0.0047)
Cylinder bore	———			Nicks or Scratches
Piston diam.	55.925 – 55.940 (2.2017 – 2.2023) Measure at 19 (0.7) from the skirt end			55.880 (2.199)
Cylinder distortion	———			0.05 (0.002)
Cylinder head distortion	———			0.05 (0.002)
Piston ring free end gap	1 st & 2nd	T	Approx. 5.0 (0.19)	4.0 (0.15)
		T	Approx. 5.0 (0.19)	4.0 (0.15)
Pistion ring end gap	0.15 – 0.30 (0.006 – 0.012)			0.70 (0.027)
Piston ring to groove clearnce	1st &2nd	0.02 – 0.06 (0.0008 – 0.0024)		———
Piston pin bore	16.002 – 16.010 (0.6300 – 0.6303)			16.036 (0.6313)
Pistion pin O.D.	15.995 – 16.000 (0.6297 – 0.6299)			15.980 (0.6291)

CONROD + CRANKSHAFT

Unit: mm (in)

ITEM	STANDARD	LIMIT
Conrod small end I.D.	20.003 – 20.011 (0.7875 – 0.7878)	20.047 (0.7893)
Conrod deflection	———	3.0 (0.12)
Crank web to web width	$48.5^{+0.2}_{0}$ $(1.909^{+0.008}_{0})$	———
Crankshaft runout	———	0.05 (0.002)

OIL PUMP

ITEM	SPECIFICATION
Oil pump reduction ratio	4.897 (59/23 × 27/11 × 21/27)
CCI pump discharge rate (Full open)	4.1 – 5.3 ml for 2 minutes at 2 000 r/min.

CLUTCH

Unit: mm (in)

ITEM	STANDARD	LIMIT
Clutch cable play	2 – 3 (0.08 – 0.12)	———
Drive plate thickness	2.65 – 2.95 (0.10 – 0.11)	2.35 (0.09)
Drive plate claw width	15.8 – 16.0 (0.62 – 0.63)	15.3 (0.60)

Downloaded from www.Manualslib.com manuals search engine

ITEM	STANDARD	LIMIT
Driven plate distortion	———	0.1 (0.004)
Clutch spring free length	———	34.77 (1.37)

THERMOSTAT ± RADIATOR

ITEM	STANDARD	LIMIT
Thermostat valve opening temperature	50±2°C	———
Thermostat valve lift	Over 7 mm at 65°C	———
Radiator cap valve opening pressure	110Kpa (1.1kg/cm²)	———

TRANSMISSION

Unit: mm (in) Except ratio

ITEM	STANDARD		LIMIT
Primary reduction ratio	2.565 (59/23)		———
Final reduction ratio	3.066 (46/15)		———
Gear ratios	Low	2.454 (27/11)	———
	2nd	1.625 (26/16)	———
	3rd	1.235 (21/17)	———
	4th	1.045 (23/22)	———
	5th	0.916 (22/24)	———
	Top	0.840 (21/25)	———
Shift fork to groove clearance	0.1 – 0.3 (0.004 – 0.011)		0.5 (0.0196)
Shift fork groove width	No.1 & No.2	4.0 – 4.1 (0.157 – 0.161)	———
	No.3	5.5 – 5.6 (0.216 – 0.220)	———
Shift fork thickness	No.1 & No.2	3.8 – 3.9 (0.149 – 0.153)	———
	No.3	5.3 – 5.4 (0.208 – 0.212)	———

DRIVE CHAIN

ITEM	STANDARD		LIMIT
Drive chain	Type	D.I.D.: 520 V2 TAKASAGO: 520 M06	———
	Links	114 links	———
	20-pitch length	———	319.4 (12.574)
Drive chain slack	20 – 30 (0.787 – 1.181)		———

CARBURETOR

ITEM	SPECIFICATION
Carburetor type	MIKUNI VM32SS
Bore size	32 mm (1.259 in)
I.D. No.	12C00

Downloaded from www.Manualslib.com manuals search engine

ITEM		SPECIFICATION
Idle r/min.		1 300±150 r/min
Fuel level		7.1±0.5 mm (0.28±0.02in)
Float height		8±1.0 mm (0.31±0.04in)
Main jet	(M.J.)	#200
Jet needle	(J.N.)	6FL65-54-4
Neddle jet	(N.J.)	0 – 6
Cut-away	(C.A.)	1.5
Pilot jet	(P.J.)	#25
By-pass	(B.P.)	1.0 mm
Pilot outlet	(P.O.)	0.6 mm
Air screw	(A.S.)	2 turns back
Valve seat	(V.S.)	2.5 mm
Starter jet	(G.S.)	#50
Power jet	No.1	#100
Power jet	No.2	#1.0
Throttle cable play		0.5 – 1.0 mm (0.02 – 0.04 in)

ELECTRICAL

Unit: mm (in)

ITEM	SPECIFICATION		NOTE
Ignition timing	14° B.T.D.C. at 1 300 r/min.		
Spark plug	Type	NGK BR9ES	
	Gap	0.7 – 0.8	
Spark performance	Over 8 (0.3) at 1 atm.		
Ignition coil resistance	Primary	B/Y-W/L 0.17 – 0.23Ω	
	Secondary	Plug cap – Terminal 15 – 20 kΩ	
Generator coil resistance	Y – Y 0.4 – 0.6 Ω		
Magneto coil resistance	Pick up coil	Br – B 80 – 120Ω	
		R – W 80 – 120Ω	
Generator no-load voltage	More than 49 V (AC) at 5 000 r/min.		Y – Y
Regulated voltage	13.0 – 15.0 V at 5 000 r/min.		
Water temperature gauge resistance	Approx. 134 – 179 Ω at 50°C		
	Approx. 15 – 17 Ω at 120°C		
Battery	Type designation	YT4L-12B	
	Capacity	12V 10.8 kC (3Ah)/10 HR	
	Standard electrolyte S.G.	1.32 at 20°C (68°F)	
Fuse size	main	20 A	

Downloaded from www.Manualslib.com manuals search engine

WATTAGE

Unit: W

ITEM		SPECIFICATION
Headlight	HI	60
	LO	55
Tail/Brake light		5/21
Turn signal light		21
Tachometer light		3
Speedometer light		3
Turn signal indicator light		3
High beam indicator light		3
Neutral indicator light		3
Oil level warning light		3
Parking or city light		4
Water temp. meter light		1.7

BRAKE + WHEEL

Unit: mm (in)

ITEM		STANDARD	LIMIT
Rear brake pedal height		50 – 60 (1.97 – 2.36)	———
Brake disc thickness	Front	4.3 – 4.7 (0.17 – 0.18)	4.0 (0.16)
	Rear	4.8 – 5.1 (0.19 – 0.20)	4.5 (0.18)
Brake disc runout		———	0.3 (0.01)
Master cylinder bore	Front	15.870 – 15.913 (0.6248 – 0.6264)	———
	Rear	12.700 – 12.743 (0.4999 – 0.5016)	———
Master cylinder piston	Front	15.827 – 15.854 (0.6231 – 0.6241)	———
	Rear	12.657 – 12.684 (0.4983 – 0.4993)	———
Brake caliper cylinder bore	Front	30.230 – 30.300 (1.1901 – 1.1929) 33.960 – 34.030 (1.3370 – 1.3397)	———
	Rear	38.180 – 38.256 (1.5031 – 1.5061)	———
Brake caliper piston diam.	Front	30.160 – 30.200 (1.1873 – 1.1889) 33.897 – 33.930 (1.3345 – 1.3358)	———
	Rear	38.098 – 38.148 (1.4999 – 1.5018)	———
Wheel rim runout	Axial	———	2.0
	Radial	———	2.0
Wheel axle runout	Front	———	0.25
	Rear	———	0.25
Tire size	Front	110/70 R17 53H	———
	Rear	140/60 R18 64H	———
Tire tread depth	Front	———	1.6
	Rear	———	2.0

Downloaded from www.Manualslib.com manuals search engine

SUSPENSION

Unit: mm (in)

ITEM	STANDARD	LIMIT	NOTE
Front fork stroke	120 (4.7)	———	
Front fork spring free length	———	287 (11.30)	
Front fork oil level	110 (4.3)	———	
Rear shock absorber	4/7	———	
Rear wheel travel	140 (5.5)	———	
Swingarm pivot shaft runot	———	0.3	

FUEL + OIL ± COOLANT

ITEM		SPECIFICATION	NOTE
Fuel type		The gasoline used should be graded 85 to 95 octane in Research Method and should be unleaded or low-lead type where they are available.	
Fuel tank including reserve		17 L (1.5/1.2 US/Imp gal)	
reserve		5.5 L (5.8/4.8 US/Imp gal)	
Engine oil type		SUZUKI CCI or CCI SUPER OIL	
Engine oil tank capacity		1.1 L (1.2/1.0 US/Imp qt)	
Transmission oil type		SAE 10W/40	
Transmission oil capacity	Change	700 ml (23.6/24.6 US/Imp oz)	
	Overhaul	800 ml (27.0/28.1 US/Imp oz)	
Front fork oil type		Fork oil #10	
Front fork oil capacity (each leg)		429 ml (14.5/15.1 US/Imp oz)	
Brake fluid type		SAE J1703, DOT3 or DOT4	
Coolant type		Use an anti-freeze & Summer coolant compatible with aluminum radiator, mixed with distilled water only, at the ratio of 50 : 50.	
Radiator including reserve		1 600ml (1.7/1.4 US/Imp qt)	

TIRE PRESSURE

COLD INFLATION TIRE PRESSURE	NORMAL RIDING					
	SOLO RIDING			DUAL RIDING		
	kPa	kg/cm²	psi	kPa	kg/cm²	psi
FRONT	200	2.00	29	200	2.00	29
REAR	225	2.25	33	250	2.50	36

Downloaded from www.Manualslib.com manuals search engine

Downloaded from www.Manualslib.com manuals search engine

RGV250L ('90-MODEL)

FOREWORD

This section describes service data and service specifications which differ from those of the RGV250K ('89-model).

NOTE:
- *Any differences between "K" ('89-model) and "L" ('90-model) in specifications and service data are clearly indicated with the asterisk marks (*).*
- *Please refer to the section 1 though 8 for details which are not given in this section.*

CONTENTS

SPECIFICATION 9- 1
SERVICE DATA 9- 2
TIGHTENING TORQUE 9- 7
THROTTLE SENSOR 9- 9
CARBURETOR 9-10
ELECTRICAL SYSTEM 9-11
REAR SUSPENSION 9-23
WIRING DIAGRAM 9-24
WIRE HARNESS 9-25
CABLE ROUTING 9-27
OIL HOSE ROUTING 9-28
REAR SHOCK ABSORBER RESERVOIR TANK ROUTING 9-29
FUEL AND AIR HOSE ROUTING 9-30

Downloaded from www.Manualslib.com manuals search engine

SPECIFICATION

DIMENSIONS AND DRY MASS

Overall length	2 015 mm (79.3 in)
Overall width	695 mm (27.4 in)
Overall height	1 065 mm (41.9 in)
Wheelbase	1 375 mm (54.1 in)
Ground clearance	120 mm (4.7 in)
Seat height	755 mm (29.7 in)
Dry mass	128 kg (282 lbs)

ENGINE

Type	Two-stroke, water-cooled, 90° V-twin
Number of cylinders	2
Bore	56.0 mm (2.205 in)
Stroke	50.6 mm (1.992 in)
Piston displacement	249 cm^3 (15.2 cu. in)
Corrected Compression ratio	7.5 : 1
Carburetor	*MIKUNI VM34SS
Air cleaner	Polyurethane foam element
Starter system	Primary kick
Lubrication system	SUZUKI CCI

TRANSMISSION

Clutch	Wet multi-plate type
Transmission	6-speed constant mesh
Gearshift pattern	1-down, 5-up
Primary reduction	2.565 (59/23)
Final reduction	3.066 (46/15)
Gear ratios, Low	2.454 (27/11)
2nd	1.625 (26/16)
3rd	1.235 (21/17)
4th	1.045 (23/22)
5th	0.916 (22/24)
Top	0.840 (21/25)
Drive chain	DAIDO : DID 520V_2 TAKASAGO : RK520M06 114 links

These specifications are subject to change without notice.
Asterisk mark (*) indicates the new "L" model specifications.

CHASSIS

Front suspension	Telescopic, coil spring, oil damped, spring 5-way, adjustable.
Rear suspension	*Full-floating suspension system, gas/coil spring, oil damped, spring pre-load fully adjustable, extension damping force 4-way and compression damping force 19-way adjustable.
Steering angle	30° (right & left)
Caster	64°25′
Trail	98 mm (3.86 in)
Turning radius	3.1 m (10.2 ft)
Front brake	Disc brake, twin
Rear brake	Disc brake
Front tire size	*110/70 R17 54H
Rear tire size	140/60 R18 64H
Front fork stroke	120 mm (4.7 in)
Rear wheel travel	140 mm (5.5 in)

ELECTRICAL

Ignition type	SUZUKI "PEI"
Ignition timing	14° B.T.D.C. below 1 300 r/min
Spark plug	N.G.K. : BR9ES
Battery	12V 10.8 kC (3Ah)/10 HR
Generator	Three-phase A.C. generator
Fuse	20 A *5 A

CAPACITIES

Fuel tank	
including reserve	17L (4.5/3.7 US/Imp gal)
reserve	5.5L (1.5/1.2 US/Imp gal)
Engine oil	1.1L (1.2/1.0 US/Imp qt)
Transmission	700 ml (23.7/24.6 US/Imp oz)
Coolant	1.6L (1.7/1.4 US/Imp qt)
Front fork oil	429 ml (14.5/15.1 US/Imp oz)

Downloaded from www.Manualslib.com manuals search engine

SERVICE DATA

CYLINDER + PISTON + PISTON RING

Unit: mm (in)

ITEM	STANDARD			LIMIT
Piston to cylinder clearance	0.070 – 0.080 (0.0028 – 0.0031)			0.120 (0.0047)
Cylinder bore	———			Nicks or Scratches
Piston diam.	55.925 – 55.940 (2.2017 – 2.2023) Measure at 19 (0.7) from the skirt end			55.880 (2.199)
Cylinder distortion	———			0.05 (0.002)
Cylinder head distortion	———			0.05 (0.002)
Piston ring free end gap	1st & 2nd	T	Approx. 5.0 (0.19)	4.0 (0.15)
		T	Approx. 5.0 (0.19)	4.0 (0.15)
Piston ring end gap	0.15 – 0.30 (0.006 – 0.012)			0.70 (0.027)
Piston ring to groove clearance	1st & 2nd	0.02 – 0.06 (0.0008 – 0.0024)		———
Piston pin bore	16.002 – 16.010 (0.6300 – 0.6303)			16.036 (0.6313)
Piston pin O.D.	15.995 – 16.000 (0.6297 – 0.6299)			15.980 (0.6291)

CONROD + CRANKSHAFT

Unit: mm (in)

ITEM	STANDARD	LIMIT
Conrod small end I.D.	20.003 – 20.011 (0.7875 – 0.7878)	20.047 (0.7893)
Conrod deflection	———	3.0 (0.12)
Crank web to web width	$48.5^{+0.2}_{0}$ $(1.909^{+0.008}_{0})$	———
Crankshaft runout	———	0.05 (0.002)

OIL PUMP

ITEM	SPECIFICATION
Oil pump reduction ratio	4.897 (59/23 x 27/11 x 21/27)
CCI pump discharge rate (Full open)	* 3.5 – 4.6 ml for 2 minutes at 2 000 r/min.

CLUTCH

Unit: mm (in)

ITEM	STANDARD	LIMIT
Clutch cable play	2 – 3 (0.08 – 0.12)	———
Drive plate thickness	2.65 – 2.95 (0.10 – 0.11)	2.35 (0.09)
Drive plate claw width	15.8 – 16.0 (0.62 – 0.63)	15.3 (0.60)

Asterisk mark (*) indicates the New "L" model specifications.

Downloaded from www.Manualslib.com manuals search engine

ITEM	STANDARD	LIMIT
Driven plate distortion	——	0.1 (0.004)
Clutch spring free length	——	34.8 (1.37)

THERMOSTAT + RADIATOR

ITEM	STANDARD	LIMIT
Thermostat valve opening temperature	50 ± 2°C	——
Thermostat valve lift	Over 7 mm at 65°C	——
Radiator cap valve opening pressure	110 kPa (1.1 kg/cm²)	——

TRANSMISSION

Unit: mm (in) Except ratio

ITEM	STANDARD		LIMIT
Primary reduction ratio	2.565 (59/23)		——
Final reduction ratio	3.066 (46/15)		——
Gear ratios	Low	2.454 (27/11)	——
	2nd	1.625 (26/16)	——
	3rd	1.235 (21/17)	——
	4th	1.045 (23/22)	——
	5th	0.916 (22/24)	——
	Top	0.840 (21/25)	——
Shift fork to groove clearance	0.1 – 0.3 (0.004 – 0.011)		0.5 (0.0196)
Shift fork groove width	No. 1 & No. 2	4.0 – 4.1 (0.157 – 0.161)	——
	No. 3	5.5 – 5.6 (0.216 – 0.220)	——
Shift fork thickness	No. 1 & No. 2	3.8 – 3.9 (0.149 – 0.153)	——
	No. 3	5.3 – 5.4 (0.208 – 0.212)	——

DRIVE CHAIN

ITEM	STANDARD		LIMIT
Drive chain	Type	D.I.D.: 520 V2 TAKASAGO: 520 M06	——
	Links	114 links	——
	20-pitch length	——	319.4 (12.574)
Drive chain slack	20 – 30 (0.787 – 1.181)		——

CARBURETOR

ITEM	SPECIFICATION	
Carburetor type	*	MIKUNI VM34SS
Bore size	*	34 mm (1.338 in)
I.D. No.	*	12C30

Asterisk mark (*) indicates the New "L" model specifications.

Downloaded from www.Manualslib.com manuals search engine

ITEM		SPECIFICATION
Idle r/min.		1 300 ± 150 r/min
Fuel level		7.1 ± 0.5 mm (0.28 ± 0.02 in)
Float height		8 ± 1.0 mm (0.31 ± 0.04 in)
Main jet	(M.J.)	* # 270
Jet needle	(J.N.)	* L 6CIF02-56-3 R 6CKF02-56-3
Needle jet	(N.J.)	* P–0
Cut-away	(C.A.)	* 1.5
Pilot jet	(P.J.)	* 27.5
By-pass	(B.P.)	* 0.6 mm
Pilot outlet	(P.O.)	* 0.6 mm
Air screw	(A.S.)	* 1¾ turns back
Valve seat	(V.S.)	* 2.5 mm
Starter jet	(G.S.)	* # 50
Power jet	No. 1	* L # 75 R # 65
Power jet	No. 2	* L # 0.8 R # 0.7
Throttle cable play		0.5 – 1.0 mm (0.02 – 0.04 in)

ELECTRICAL

Unit: mm (in)

ITEM	SPECIFICATION		NOTE
Ignition timing	14° B.T.D.C. at 1 300 r/min.		
Spark plug	Type	NGK BR9ES	
	Gap	0.7 – 0.8	
Spark performance	Over 8 (0.3) at 1 atm.		
Ignition coil resistance	Primary	B/Y – W/L 0.17 – 0.23 Ω	
	Secondary	Plug cap – Terminal 5.0 – 7.5 kΩ	
Generator coil resistance	Y – Y 0.4 – 0.6 Ω		
Magneto coil resistance	Pick up coil	Br – B 80 – 120 Ω	
		R – W 80 – 120 Ω	
Generator no-load voltage	More than 49 V (AC) at 5 000 r/min.		Y – Y
Regulated voltage	13.0 – 15.0 V at 5 000 r/min.		
Water temperature gauge resistance	Approx. 134 – 179 Ω at 50°C		
	Approx. 15 – 17 Ω at 120°C		
Battery	Type designation	* YT4L-BS	
	Capacity	12V 10.8 kC (3Ah)/10 HR	
	Standard electrolyte S.G.	1.32 at 20°C (68°F)	
Fuse size	Main	20 A	
	* Ignition	5 A	

Asterisk mark (*) indicates the New "L" model specifications.

Downloaded from www.Manualslib.com manuals search engine

WATTAGE

Unit: W

ITEM		SPECIFICATION
Headlight	HI	60
	LO	55
Tail/Brake light		5/21
Turn signal light		21
Tachometer light		3
Speedometer light		3
Turn signal indicator light		3
High beam indicator light		3
Neutral indicator light		3
Oil level warning light		3
Parking or city light		4
Water temp. meter light		1.7

BRAKE + WHEEL

Unit: mm (in)

ITEM	STANDARD		LIMIT
Rear brake pedal height	50 – 60 (1.97 – 2.36)		———
Brake disc thickness	Front	4.3 – 4.7 (0.17 – 0.18)	4.0 (0.16)
	Rear	4.8 – 5.1 (0.19 – 0.20)	4.5 (0.18)
Brake disc runout	———		0.3 (0.01)
Master cylinder bore	Front	15.870 – 15.913 (0.6248 – 0.6264)	———
	Rear	12.700 – 12.743 (0.4999 – 0.5016)	———
Master cylinder piston	Front	15.827 – 15.854 (0.6231 – 0.6241)	———
	Rear	12.657 – 12.684 (0.4983 – 0.4993)	———
Brake caliper cylinder bore	Front	30.230 – 30.300 (1.1901 – 1.1929) 33.960 – 34.030 (1.3370 – 1.3397)	———
	Rear	38.180 – 38.256 (1.5031 – 1.5061)	———
Brake caliper piston diam.	Front	30.160 – 30.200 (1.1873 – 1.1889) 33.897 – 33.930 (1.3345 – 1.3358)	———
	Rear	38.098 – 38.148 (1.4999 – 1.5018)	———
Wheel rim runout	Axial	———	2.0 (0.08)
	Radial	———	2.0 (0.08)
Wheel axle runout	Front	———	0.25 (0.010)
	Rear	———	0.25 (0.010)

Downloaded from www.Manualslib.com manuals search engine

ITEM	STANDARD		LIMIT
Tire size	Front	* 110/70 R17 54H	——
	Rear	140/60 R18 64H	——
Tire tread depth	Front	——	1.6 (0.06)
	Rear	——	2.0 (0.08)

SUSPENSION

Unit: mm (in)

ITEM	STANDARD	LIMIT	NOTE
Front fork stroke	120 (4.7)	——	
Front fork spring free length	——	287 (11.30)	
Front fork oil level	110 (4.3)	——	
Rear wheel travel	140 (5.5)	——	
Swingarm pivot shaft runout	——	0.3	

FUEL + OIL + COOLANT

ITEM	SPECIFICATION		NOTE
Fuel type	The gasoline used should be graded 85 to 95 octane in Research Method and should be unleaded type where they are available.		
Fuel tank including reserve	17 L (4.5/3.7 US/Imp gal)		
reserve	5.5 L (1.5/1.2 US/Imp gal)		
Engine oil type	SUZUKI CCI or CCI SUPER OIL		
Engine oil tank capacity	1.1 L (1.2/1.0 US/Imp qt)		
Transmission oil type	SAE 10W/40		
Transmission oil capacity	Change	700 ml (23.6/24.6 US/Imp oz)	
	Overhaul	800 ml (27.0/28.1 US/Imp oz)	
Front fork oil type	Fork oil # 10		
Front fork oil capacity (each leg)	429 ml (14.5/15.1 US/Imp oz)		
Brake fluid type	* DOT 4		
Coolant type	Use an anti-freeze & Summer coolant compatible with aluminum radiator, mixed with distilled water only, at the ratio of 50 : 50.		
Radiator including reserve	1 600 ml (1.7/1.4 US/Imp qt)		

Asterisk mark (*) indicates the New "L" model specifications.

Downloaded from www.Manualslib.com manuals search engine

TIRE PRESSURE

COLD INFLATION TIRE PRESSURE	NORMAL RIDING					
	SOLO RIDING			DUAL RIDING		
	kPa	kg/cm²	psi	kPa	kg/cm²	psi
FRONT	200	2.00	29	200	2.00	29
REAR	225	2.25	33	250	2.50	36

TIGHTENING TORQUE

ENGINE

ITEM		N·m	kg·m
Transmission oil drain plug	14 mm	20 – 25	2.0 – 2.5
Coolant drain plug		8 – 12	0.8 – 1.2
Exhaust pipe clamp nut		18 – 28	1.8 – 2.8
Muffler mounting bolt		18 – 28	1.8 – 2.8
Engine mounting nut	10 mm	60 – 72	6.0 – 7.2
	8 mm	28 – 34	2.8 – 3.4
Engine mounting bracket bolt		18 – 28	1.8 – 2.8
Down tube		22 – 28	2.2 – 2.8
Kick starter lever bolt		18 – 28	1.8 – 2.8
Cylinder head nut		23 – 27	2.3 – 2.7
Cylinder nut		23 – 27	2.3 – 2.7
Crankcase bolt	6 mm	9 – 13	0.9 – 1.3
	8 mm	20 – 24	2.0 – 2.4
Gearshift arm stopper		15 – 23	1.5 – 2.3
Primary drive gear nut		60 – 80	6.0 – 8.0
Water pump cover bolt		6 – 10	0.6 – 1.0
Transmission cover nut		8 – 12	0.8 – 1.2
Clutch sleeve hub nut		40 – 60	4.0 – 6.0
Clutch spring bolt		8 – 12	0.8 – 1.2
Clutch cover bolt		6 – 10	0.6 – 1.0
Magneto rotor nut		85 – 105	8.5 – 10.5
Water pump impeller bolt		7 – 9	0.7 – 0.9
Water temp gauge		6 – 10	0.6 – 1.0
Radiator mounting nut		7 – 9	0.7 – 0.9
Carburetor mounting bolt		7 – 9	0.7 – 0.9

Downloaded from www.Manualslib.com manuals search engine

CHASSIS

ITEM	N·m	kg-m
Steering stem head nut	60 – 100	6.0 – 10.0
Handlebars set bolt	6 – 10	0.6 – 1.0
Front fork upper clamp bolt	15 – 25	1.5 – 2.5
Front fork lower clamp bolt	15 – 25	1.5 – 2.5
Front fork cap bolt	15 – 30	1.5 – 3.0
Front axle shaft	50 – 80	5.0 – 8.0
Front axle clamp bolt	15 – 25	1.5 – 2.5
Handlebars mounting bolt	15 – 25	1.5 – 2.5
Front brake master cylinder mounting bolt	5 – 8	0.5 – 0.8
Front caliper mounting bolt	25 – 40	2.5 – 4.0
Front caliper housing bolt	18 – 23	1.8 – 2.3
Brake hose union bolt	15 – 20	1.5 – 2.0
Air bleeder valve (Front and rear)	6 – 9	0.6 – 0.9
Front and rear disc bolt	15 – 25	1.5 – 2.5
Swingarm pivot nut	85 – 110	8.5 – 11.0
Rear brake rod lock nut	15 – 25	1.5 – 2.5
Rear shock absorber mounting nut (Upper and lower)	40 – 60	4.0 – 6.0
Rear cushion lever nut	70 – 100	7.0 – 10.0
Rear cushion rod nut (Upper and lower)	70 – 100	7.0 – 10.0
Rear caliper housing bolt	18 – 23	1.8 – 2.3
Rear torque link nut (Front and rear)	22 – 34	2.2 – 3.4
Rear master cylinder mounting bolt	8 – 12	0.8 – 1.2
Rear axle nut	85 – 115	8.5 – 11.5
Rear sprocket nut	20 – 30	2.0 – 3.0
Front footrest bolt	15 – 25	1.5 – 2.5
*Front footrest holder bolt	27 – 43	2.7 – 4.3
Rear brake master cylinder hose union bolt	15 – 20	1.5 – 2.0
Rear brake caliper hose union bolt	20 – 25	2.0 – 2.5

Asterisk mark (*) indicates the New "L" model specifications.

Downloaded from www.Manualslib.com manuals search engine

THROTTLE SENSOR

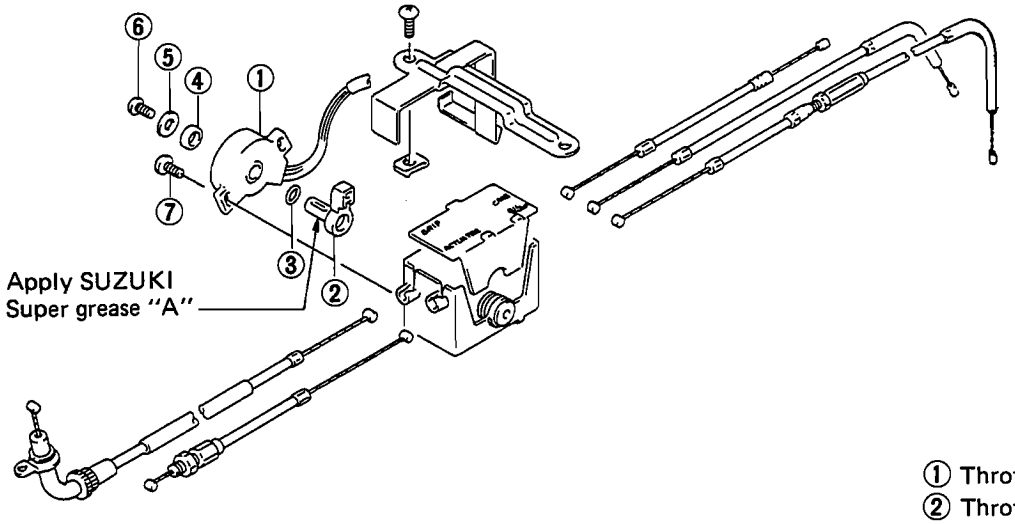

Tightening torque		
ITEM	N·m	kg-m
⑥	0.5 – 1.0	0.05 – 0.1

① Throttle sensor
② Throttle sensor shaft
③ O-ring
④ Seal
⑤ Washer
⑥ Screw
⑦ Screw

- Turn the throttle pulley Ⓐ to its full open position and hold. Fit the throttle sensor assembly to the side of throttle pulley body while engaging the hole of throttle sensor shaft arm with the boss provided on the side of the throttle pulley. Attach two throttle sensor fitting screws and bring them to finger tight. Turn the sensor body all the way in the direction indicated by the arrow, force the body downward to secure the clearance as indicated and then tighten the screws.

CAUTION:
Make sure to provide clearance between Ⓑ and Ⓒ as shown in the photo.

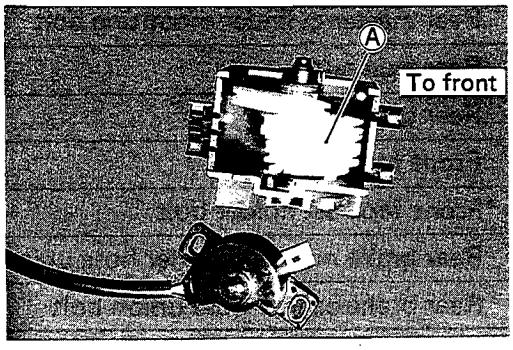

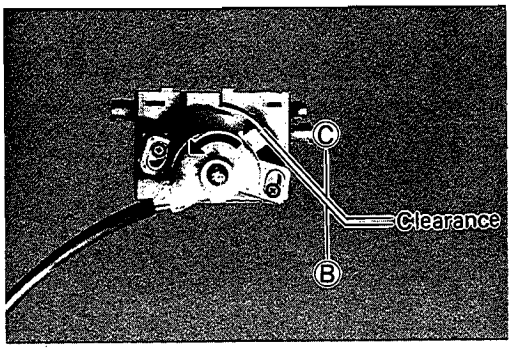

Downloaded from www.Manualslib.com manuals search engine

CARBURETOR

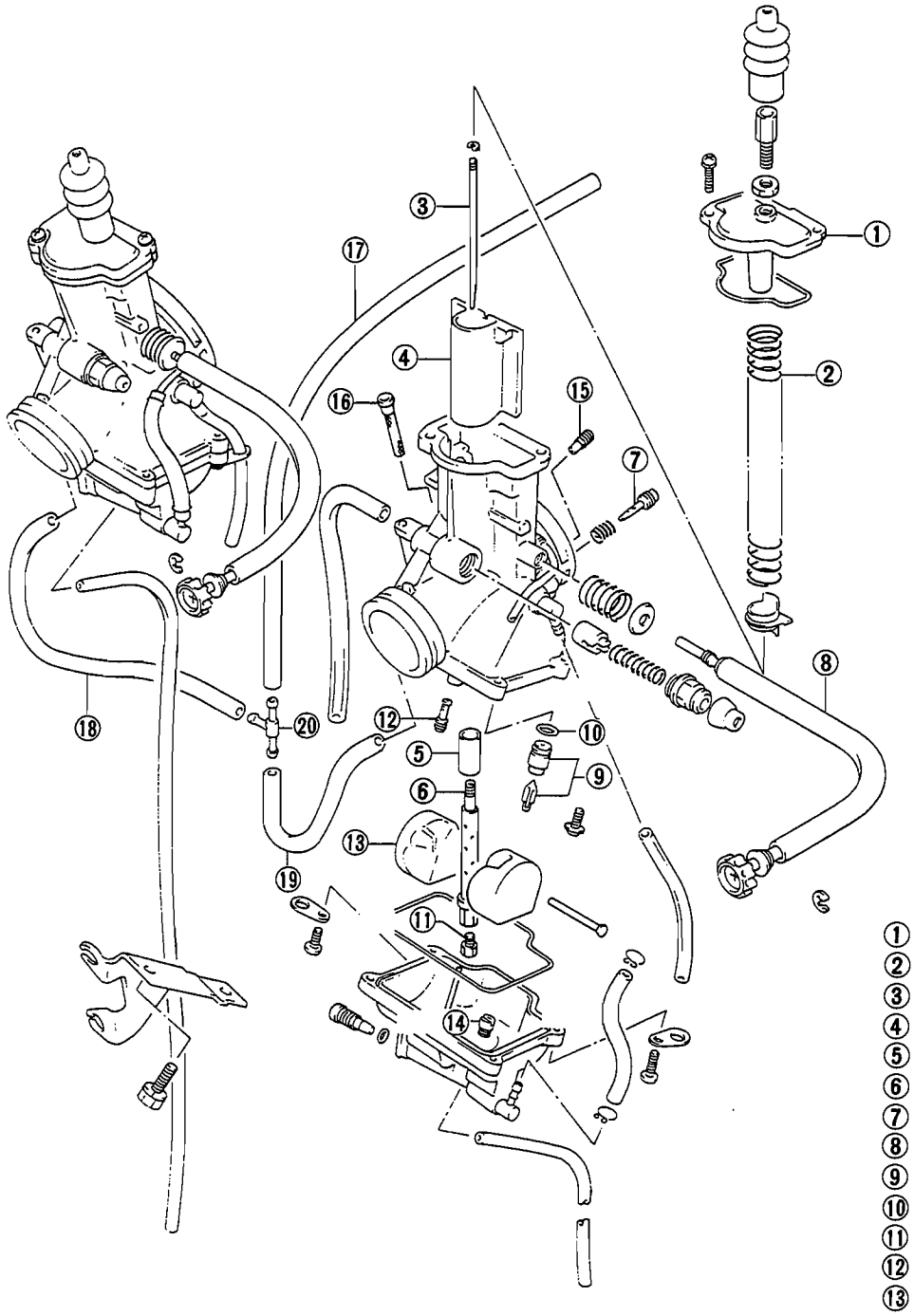

① Top cap
② Spring
③ Jet needle
④ Throttle valve
⑤ Ring
⑥ Needle jet
⑦ Air screw
⑧ Throttle valve stop adjuster
⑨ Needle valve
⑩ O-ring
⑪ Main jet
⑫ Pilot jet
⑬ Float
⑭ Power jet
⑮ Air jet
⑯ Filter
⑰ Hose
⑱ Hose
⑲ Hose
⑳ Joint

Downloaded from www.Manualslib.com manuals search engine

ELECTRICAL SYSTEM

IGNITION SYSTEM

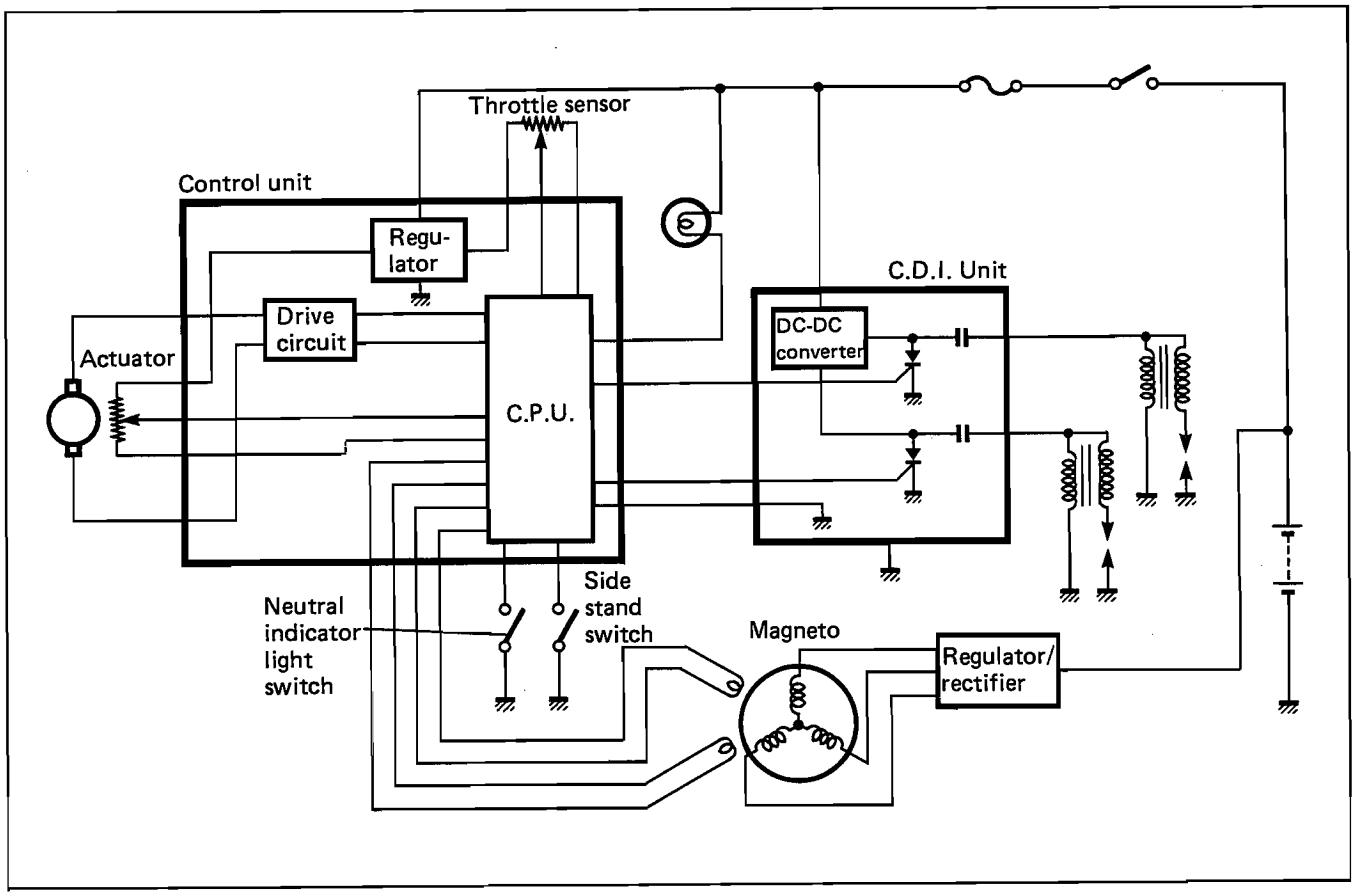

IGNITION

The DC-DC converter in the CDI unit steps up the battery voltage to a high voltage and charges the capacitor (C). The capacitor discharges its stored energy to the ignition coil primary windings when the SCR turns on and grounds the line between the DC-DC converter and capacitor. The SCR turns on when the signal from the control unit is sent to the SCR's gate. The moment the capacitor discharges the electrical energy to the primary windings, a very high voltage is induced within the secondary windings and a hot spark jumps across the air gap between the center and side electrodes of the spark plug.
The control unit determines the SCR gate signal timing to be best suited for the spark timing according to the prevailing engine revolutions (pulser signal) and throttle opening (throttle sensor signal).

EXHAUST

The control unit also produces a signal for driving the actuator to control the exhaust valve operation. The unit determines the best exhaust valve angle for the prevailing engine operating conditions according to the signals supplied from the pulser and throttle sensor.

Downloaded from www.Manualslib.com manuals search engine

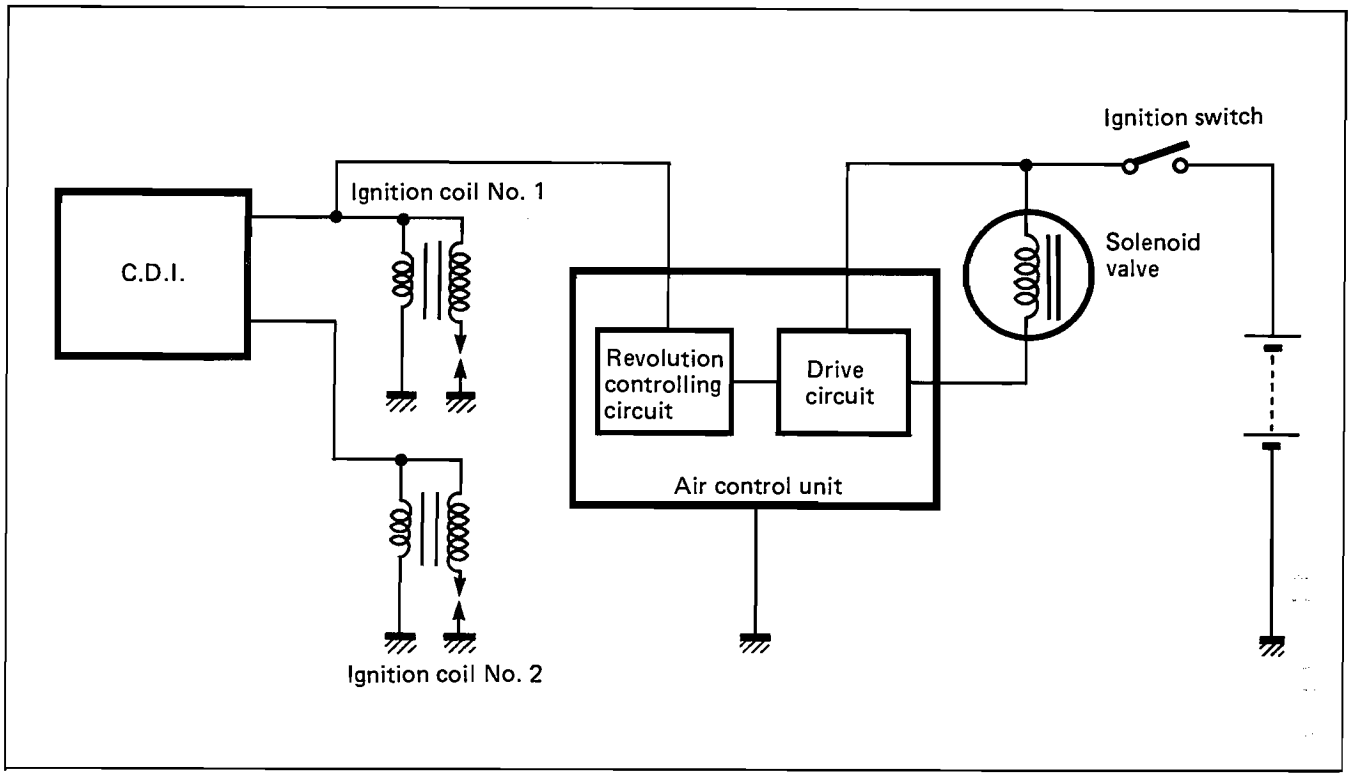

AIR VALVE

The air valve control unit receives the ignition coil primary pulse signal which is then processed for determining the current engine revolution speed. When the revolution reaches the predetermined level, the drive circuit begins to operate for driving the air valve.

Downloaded from www.Manualslib.com manuals search engine

INSPECTION

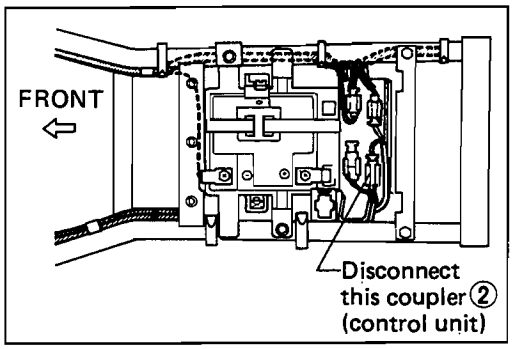

IGNITION SYSTEM AND EXHAUST VALVE OPERATION CHECK

This section explains the checking procedure for the total ignition system and exhaust valve operation using the ignitor checker. This checking can be done with the engine on the machine.

09931-64410 : Ignitor checker

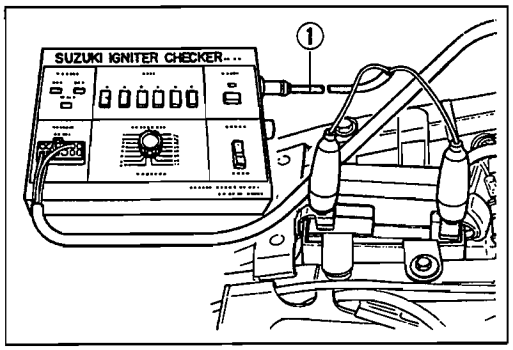

WIRING PROCEDURE:

- Disconnect the signal generator lead wire coupler ② at the position shown in the figure.
- Use the RGV250 lead wire "MODE 4" and connect the lead wire to the disconnected coupler ②.
- Connect the power source lead ① to the battery.
- Select the "MODE 4" button.
- Remove the both spark plugs and rest the plugs on the cylinder head with plug caps to check sparks.

CAUTION:

* **Be sure the Black lead is connected to the battery ⊖ terminal and Red lead to the ⊕ terminal.**
* **Before connecting the power source leads, make sure both "POWER" button and "START" switch are in "off" position (POWER button not depressed).**

NOTE:
Be sure the battery used is in fully-charged condition.

CHECK PROCEDURE:

1. Turn on the ignition switch and check that the exhaust valves open and close in the cleaning operation.
2. Turn on the "POWER" switch and "START" switch. Turn "REVOLUTION" dial up gradually (assuming the engine is gradually revved up) and check the sparks between plug gaps.

- When the throttle is closed condition, the No. 1 cylinder stop sparking over "8" (8 000 r/min), at the same time tachometer indication drops to 0 r/min. However, the No. 2 cylinder continously sparks until "10"(10 000 r/min). The above condition shows ignition system works properly.

Downloaded from www.Manualslib.com manuals search engine

- When the throttle valves are fully-open condition, both No. 1 and No. 2 cylinders continuously sparks until engine r/min reaches to "10" (10 000 r/min) and stops sparking over "11" (11 000 r/min).

IGNITION SYSTEM

Throttle position	Revolution dial	Sparks: O, Not sparks: X No. 1 (Rear)	No. 2 (Front)
CLOSED	0 – "8"	O	O
	"9" – "10"	X	O
	at "11"	X	X
OPENED	0 – "10"	O	O
	at "11"	X	X

3. Keep the engine r/min at "8" (8 000 r/min) in the throttle-closed condition and turn the throttle to the fully open position. The exhaust valves operates from closed postion to half-open position in response to the throttle position. Turn the engine r/min knob to "10" (10 000 r/min) and check that the exhaust valves open completely in any throttle position.

EXHAUST VALVE OPERATION

Throttle position	Revolution dial	Exhaust valve
CLOSED	0 – "8"	CLOSED POSITION
CLOSED → OPEN	at "8"	CLOSE → HALF OPEN
ANY POSITION	"9" – "10"	OPEN POSITION

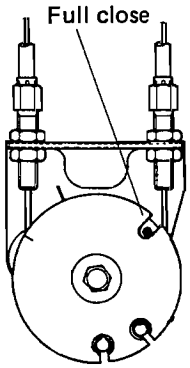

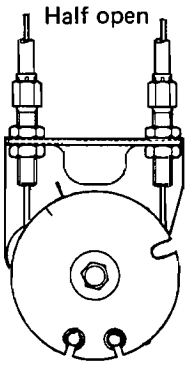

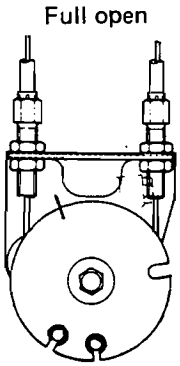

4. AIR SOLENOID VALVE OPERATION

Turn the r/min knob from "2" (2 000 r/min) to "4" (4 000 r/min) and hear the click sound that opens the air passage to the carburetor by solenoid. Turn the r/min knob from "6" (6 000 r/min) to "4" (4 000) r/min) and click sound is heard, which indicates the closing operation of the air solenoid valve.

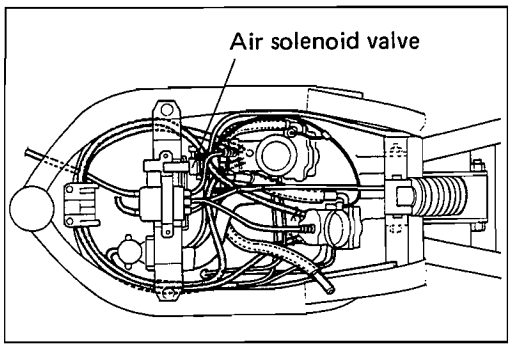

AIR SOLENOID VALVE OPERATION

Revolution dial	Solenoid valve
"2" → "4"	OPEN
"6" → "4"	CLOSE

Downloaded from www.Manualslib.com manuals search engine

CDI UNIT (Checking with Pocket Tester)

- Using the SUZUKI pocket tester, bring the ⊕ probe and the ⊖ probe into contact with each lead wire of the CDI unit, check continuity, and measure the resistance value.

09900-25002 : Pocket tester

- When the continuity and the resistance values are as shown in the following table, the CDI unit is judged to be normal.

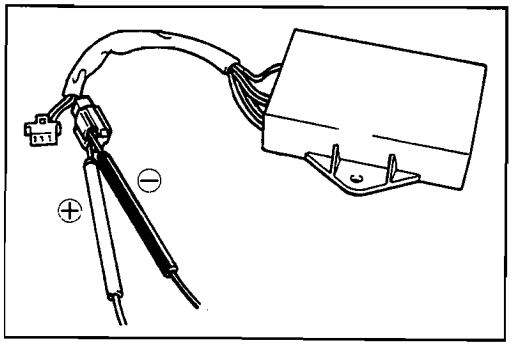

CAUTION:
As capacitors, diodes, etc. are used inside this CDI unit, the resistance values will differ when an ohmmeter other than SUZUKI pocket tester is used.

- Measure the resistance between the leads.
- Tester range — x kΩ

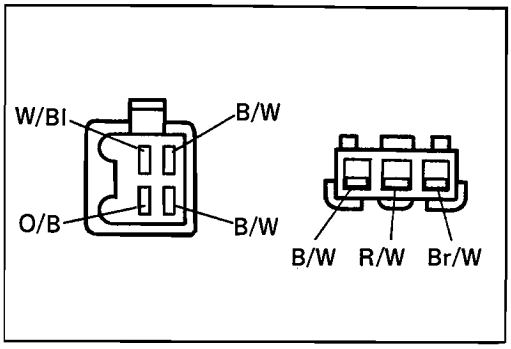

Unit: Approx. kΩ

		⊕ Probe of tester to:						
		Br/W	R/W	B/W	O/B	W/Bl	B/Y	B/W
⊖ Probe of tester to:	Br/W		0.1 – 5	0.1 – 5	∞	∞	∞	0.1 – 5
	R/W	0.1 – 5		0.1 – 5	∞	∞	∞	0.1 – 5
	B/W	0.1 – 5	0.1 – 5		∞	∞	∞	0
	O/B	1 – 10	1 – 10	∞		∞	∞	1 – 10
	W/Bl	1 – 10	1 – 10	1 – 10	∞		∞	1 – 10
	B/Y	1 – 10	1 – 10	1 – 10	∞	∞		1 – 10
	B/W	0.1 – 5	0.1 – 5	0	∞	∞	∞	

ACTUATOR PULLEY (Checking with Pocket Tester)

- Check the actuator resistance values.

Tester connected to:	Resistance	Tester range
R/B – B/R	1 – 20 Ω	x 1 Ω
O – B/W	4 – 6 kΩ	x k Ω

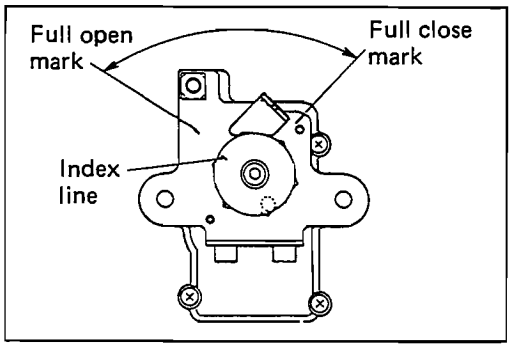

NOTE:
Do not move the pulley at the this time.

- The pulley should move within the angle range indicated by the arrow.

CAUTION:
Do not force the pulley in an attempt to move it beyond the angle range indicated by the arrow.

Downloaded from www.Manualslib.com manuals search engine

AIR CONTROL UNIT (Checking with Pocket Tester)

- Using the SUZUKI pocket tester, bring the ⊕ probe and the ⊖ probe into contact with each lead wire of the Air Control Unit check for continuity, and measure the resistance value.

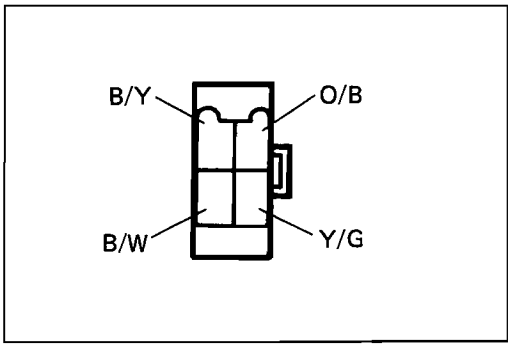

09900-25002 : Pocket tester

- When the continuity and the resistance values are as shown in the following table, the Air Control Unit is judged to be normal.

CAUTION:
As capacitors, diodes, etc. are used inside this Air Control unit, the resistance values will differ when an ohmmeter other than SUZUKI pocket tester is used.

- Measure the resistance between the leads.
- Tester range — x kΩ

Unit: Approx. kΩ

		⊕ Probe of tester to:			
		B/Y	B/W	O/B	Y/G
⊖ Probe of tester to:	B/Y		∞	∞	∞
	B/W	100 — ∞		∞	1 — 5
	O/B	∞	5 — 20		10 — 50
	Y/G	∞	∞	∞	

Air solenoid valve	Engine r/min
ON → OFF	3 400 — 5 400
ON → OFF	5 200 — 3 200

AIR SOLENOID VALVE (Checking with Pocket Tester)

- Using the SUZUKI pocket tester, check the continuity between the terminals of the Air Solenoid Valve.

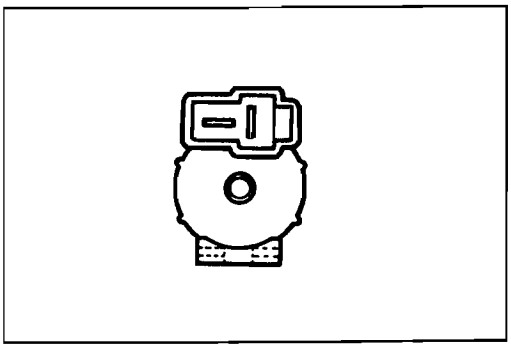

09900-25002 : Pocket tester

CAUTION:
As capacitors, diodes, etc. are used inside this Air Solenoid Valve, the resistance values will differ when an ohmmeter other then SUZUKI pocket tester is used.

- Measure the resistance between the leads.
- Tester range — x 1 kΩ

STD resistance	
Terminals	0 Ω Tester range: (1 kΩ)

Downloaded from www.Manualslib.com manuals search engine

THROTTLE SENSOR (Checking with Pocket Tester)

- Using the SUZUKI pocket tester, bring the ⊕ probe and the ⊖ probe into contact with each lead wire of the Throttle Sensor, check for continuity, and measure the resistance value.

09900-25002 : Pocket tester

STD resistance	
R/B	3.5 – 6.5 Ω Tester range: (1 kΩ)

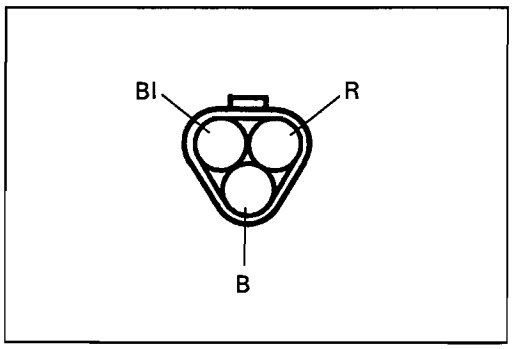

CONTROL UNIT

CDI CIRCUIT

- Using the SUZUKI pocket tester, bring the ⊕ probe and the ⊖ probe into contact with each lead wire of the CDI or Neutral Circuit, check for continuity, and measure the resistance value.

09900-25002 : Pocket tester

- When the continuity and the resistance values are as shown in the following table, the CDI Circuit is judged to be normal.

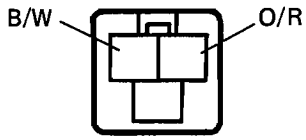

CDI CIRCUIT

CAUTION:

As capacitors, diodes, etc. are used inside this CDI circuit, the resistance values will differ when an ohmmeter other than SUZUKI pocket tester is used.

- Measure the resistance between the reads.
- Tester range – x kΩ

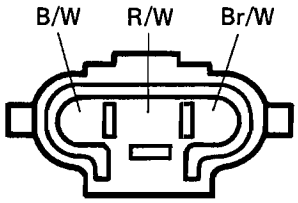

CDI CIRCUIT

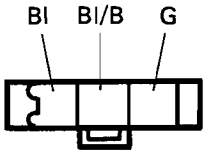

NEUTRAL CIRCUIT

Downloaded from www.Manualslib.com manuals search engine

Unit: Approx. kΩ

		⊕ Probe of tester to:							
		O/R	B/W	G	Bl	Bl/B	Br/W	R/W	B/W
⊖ Probe of tester to:	O/R		10 – 50	10 – 50	10 – 50	50 – 500	50 – 500	50 – 500	10 – 50
	B/W	∞		1 – 10	1 – 10	1 – 10	1 – 10	1 – 10	0
	G	∞	1 – 10		1 – 10	1 – 10	5 – 20	5 – 20	1 – 10
	Bl	∞	1 – 10	1 – 10		1 – 10	5 – 20	5 – 20	1 – 10
	Bl/B	∞	∞	∞	∞		∞	∞	∞
	Br/W	∞	∞	∞	∞	∞		∞	∞
	R/W	∞	∞	∞	∞	∞	∞		∞
	B/W	∞	0	1 – 10	1 – 10	1 – 10	1 – 10	1 – 10	

MAGNETO CIRCUIT

- Using the SUZUKI pocket tester, bring the ⊕ probe and the ⊖ probe into contact with each lead wire of the Magneto Circuit, check for continuity, and measure the resistance value.

09900-25002 : Pocket tester

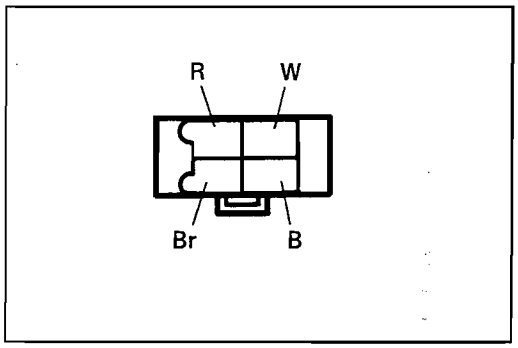

- When the continuity and the resistance values are as shown in the following table, MAGNETO Circuit is judged to be normal.

Unit: Approx. kΩ

		⊕ Probe of tester to:			
		Br	R	W	B
⊖ Probe of tester to:	Br		1 – 10	1 – 10	1 – 10
	R	1 – 10		1 – 10	1 – 10
	W	1 – 10	1 – 10		0
	B	1 – 10	1 – 10	0	

ACTUATOR CIRCUIT (Checking with Pocket Tester)

- Using the SUZUKI pocket tester, bring the ⊕ probe and the ⊖ probe into contact with each lead wire of the ACTUATOR Circuit, check for continuity, and measure the resistance value.

09900-25002 : Pocket tester

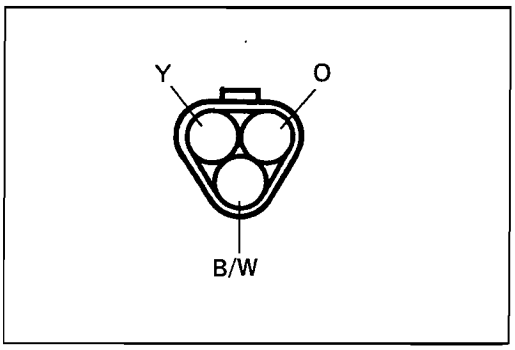

- When the continuity and the resistance values are as shown in the following table, the ACTUATOR Circuit is judged to be normal.

Downloaded from www.Manualslib.com manuals search engine

CAUTION:
As capacitors diodes, etc. are used inside this ACTUATOR Circuit, the resistance values will differ when an ohmmeter other than SUZUKI pocket tester is used.

- Measure the resistance between the leads.
- Tester range – x kΩ

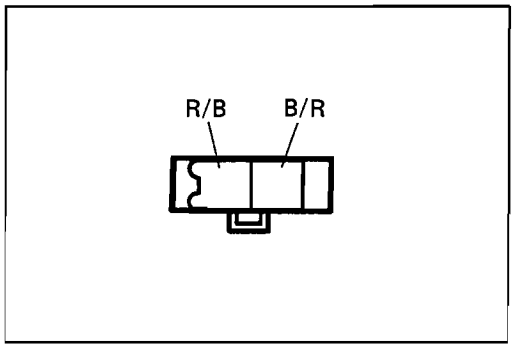

Unit: Approx. kΩ

		⊕ Probe of tester to:				
		O	Y	B/W	B/R	R/B
⊖ Probe of tester to:	O		5 – 20	1 – 10	1 – 10	1 – 10
	Y	10 – 50		10 – 50	20 – 200	20 – 200
	B/W	1 – 10	1 – 10		1 – 10	1 – 10
	B/R	∞	∞	∞		∞
	R/B	∞	∞	∞	∞	

THROTTLE SENSOR CIRCUIT (Checking with Pocket tester)

- Using the SUZUKI pocket tester, bring the ⊕ probe and the ⊖ probe into contact with each lead wire of the Throttle Sensor Circuit, check for continuity, and measure the resistance value.

09900-25002 : Pocket tester

- When the continuity and the resistance values are as shown in the following table, the THROTTLE Circuit is judged to be normal.

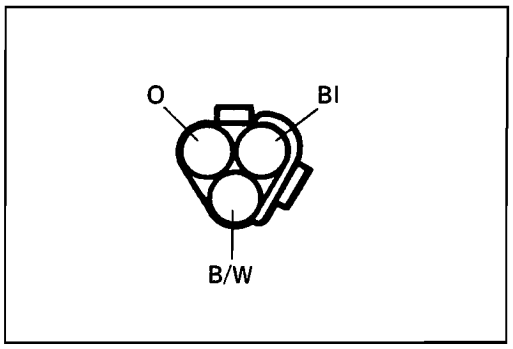

CAUTION:
As capacitors diodes, etc. are used inside this THROTTLE SENSOR Circuit, the resistance values will differ when an ohmmeter other than SUZUKI pocket tester is used.

- Measure the resistance between the leads.
- Tester range – x kΩ

Unit: Approx. kΩ

		⊕ Probe of tester to:		
		O	Bl	B/W
⊖ Probe of tester to:	O		1 – 10	1 – 10
	Bl	∞		10 – 50
	B/W	∞	∞	

Downloaded from www.Manualslib.com manuals search engine

BATTERY

SPECIFICATIONS

Type designation	YT4L–BS
Capacity	12V, 10.8 kC (3 Ah)/10HR
Standard electrolyte S.G.	1.320 at 20°C (68°F)

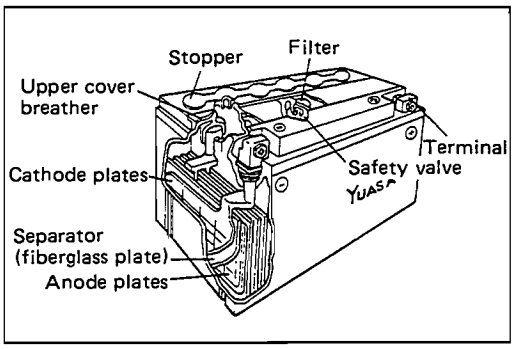

INITIAL CHARGING

Filling electrolyte

- Remove the aluminum tape ① sealing the battery electrolyte filler holes.

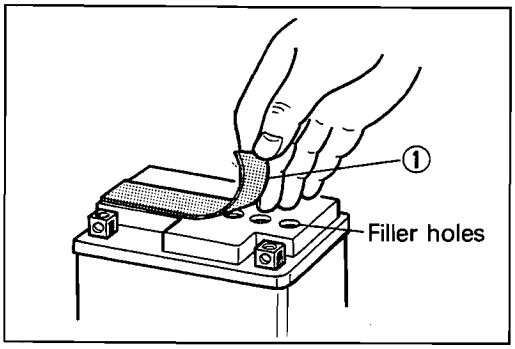

- Remove the caps ②.

NOTE:

* *After filling the electrolyte completely, use the removed cap ② as the sealed caps of battery-filler holes.*

* *Do not remove or pierce the sealed areas ③ of the electrolyte container.*

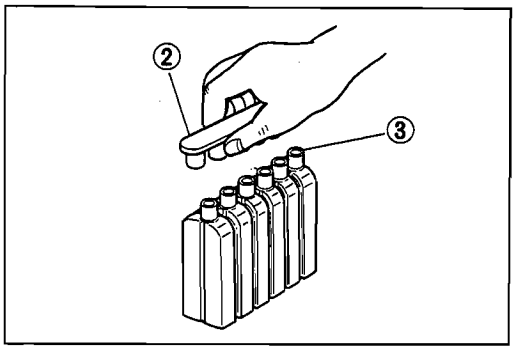

- Insert the nozzles of the electrolyte container into the battery's electrolyte filler holes, holding the container firmly so that it does not fall. Take precaution not to allow any of the fluid to spill.

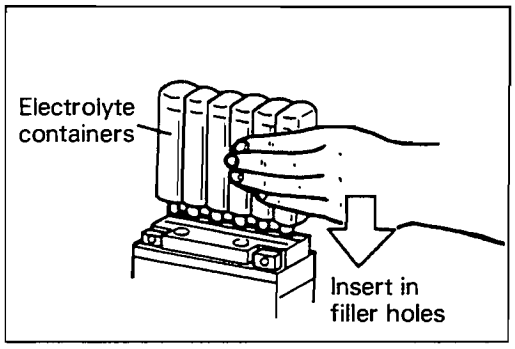

- Make sure air bubbles are coming up each electrolyte container, and leave in this position for about more than 20 minutes.

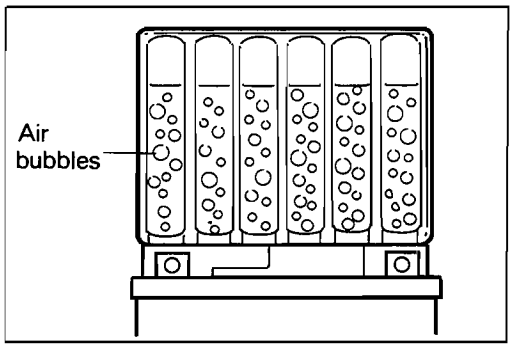

Downloaded from www.Manualslib.com manuals search engine

NOTE:
If no air bubbles are coming up from a filler port, tap the bottom of the two or three times.
Never remove the container from the battery.

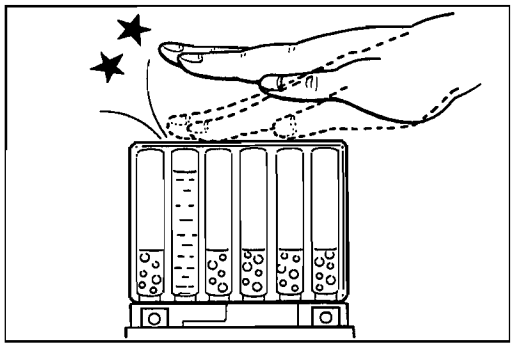

- After confirming that the electrolyte has entered the battery completely, remove the electrolyte containers from the battery. Wait for around 20 minutes.
- Insert the caps into the filler holes, pressing in firmly so that the top of the caps do not protrude above the upper surface of the battery's top cover.

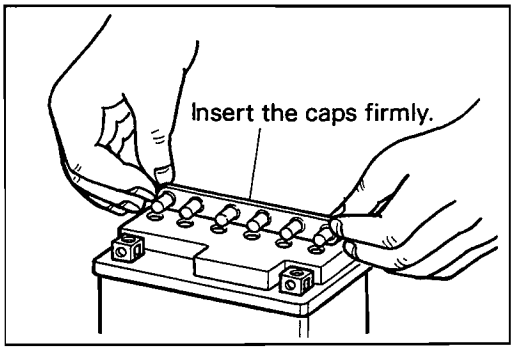

CAUTION:
* **Never use anything except the specified battery.**
* **Once install the caps to the battery; do not remove the caps.**

- Using SUZUKI pocket tester, measure the battery voltage. The tester should indicate more than 12.5V (DC) as shown in the Fig. If the battery voltage is lower than the specification, charge the battery with a battery charger.

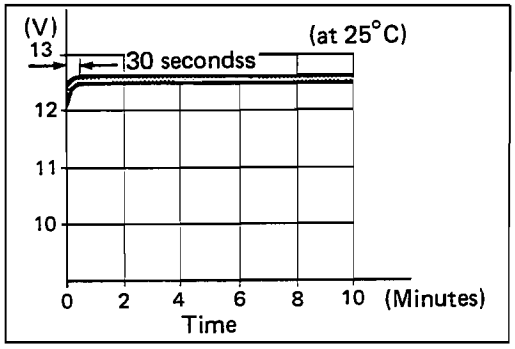

NOTE:
Initial charging for a new battery is recommended if two years have elapsed since the date of manufacture.

SERVICING

Visually inspect the surface of the battery container. If any signs of cracking or electrolyte leakage from the sides of the battery have occurred, replace the battery with a new one. If the battery terminals are found to be coated with rust or an acidic white powdery substance, then this can be cleaned away with sandpaper.

Downloaded from www.Manualslib.com manuals search engine

RECHARGING OPERATION

- Using the pocket tester, check the battery voltage. If the voltage reading is less than the 12.0V (DC), recharge the battery with a battery charger.

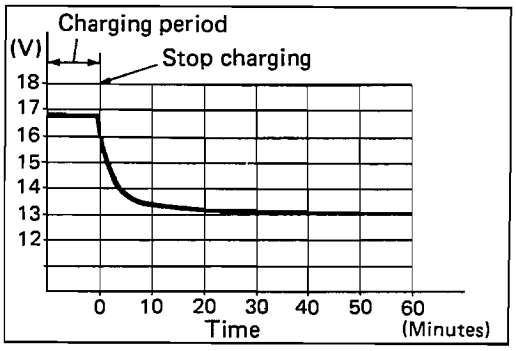

CAUTION:

When recharging the battery, remove the battery from the motorcycle.

NOTE:

Do not remove the stoppers on the battery top while recharging.

Recharge time : 5A for half an hour or 0.5A for 5 hours

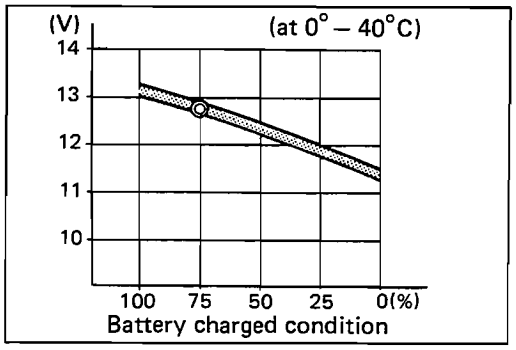

CAUTION:

Be careful not to permit the charging current to exceed 5A at any time.

- After recharging, wait for more than 30 minutes and check the battery voltage with a pocket tester.
- If the battery voltage is less than the 12.5V, recharge the battery again.
- If battery voltage is still less than 12.5V after recharging, replace the battery with a new one.
- When a battery is left for a long term without using, it is subject to discharge. When the motorcycle is not used for more than 1 month (especially during the winter season), recharge the battery once a month at least.

Downloaded from www.Manualslib.com manuals search engine

REAR SUSPENSION

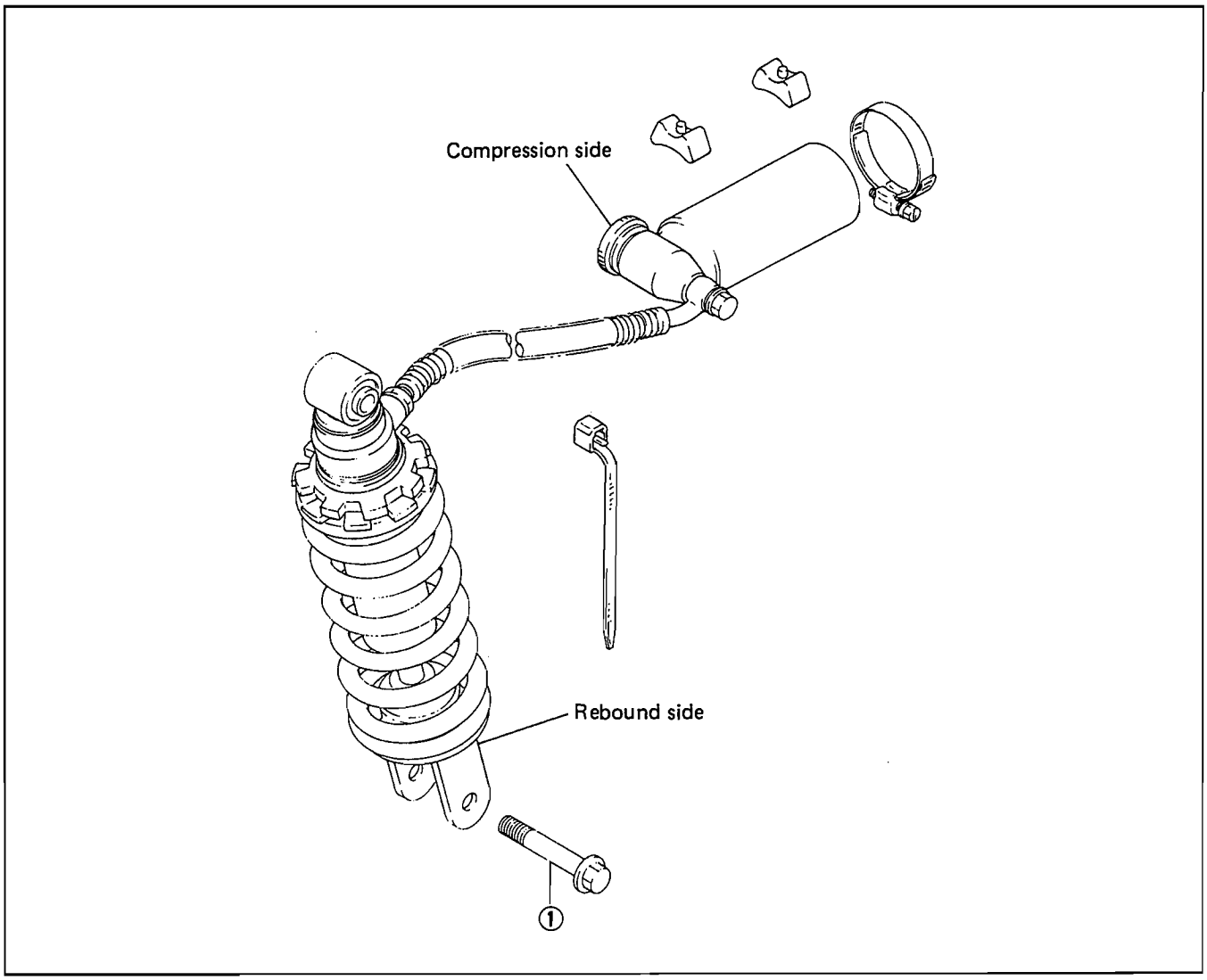

		Front	Rear		
		Spring preload	Spring preload	Damping force	
				Rebound	Compression
Solo riding	Softer	4	179 mm (7.05 in)	1	Standard + 1
	Standard	3	179 mm (7.05 in)	2	9 ± 2
	Stiffer	3	179 mm (7.05 in)	2	9 ± 2
Dual riding		3	179 mm (7.05 in)	2	9 ± 2
Adjust range		5	$\pm^{5}_{0}$ mm ($\pm^{0.20}_{0}$ in)	4	20

NOTE:
REAR SUSPENSION DAMPING ADJUSTMENT
Fully turn the damping force adjuster clockwise it is at 0 position and turn out it to 9th click (± 2 click).
The STD setting position is 9th clock (± 2 click) from 0 position.
The STD setting position is obtained so that the painted mark on its adjuster knob is aligned with the indication mark on adjuster body.

Downloaded from www.Manualslib.com manuals search engine

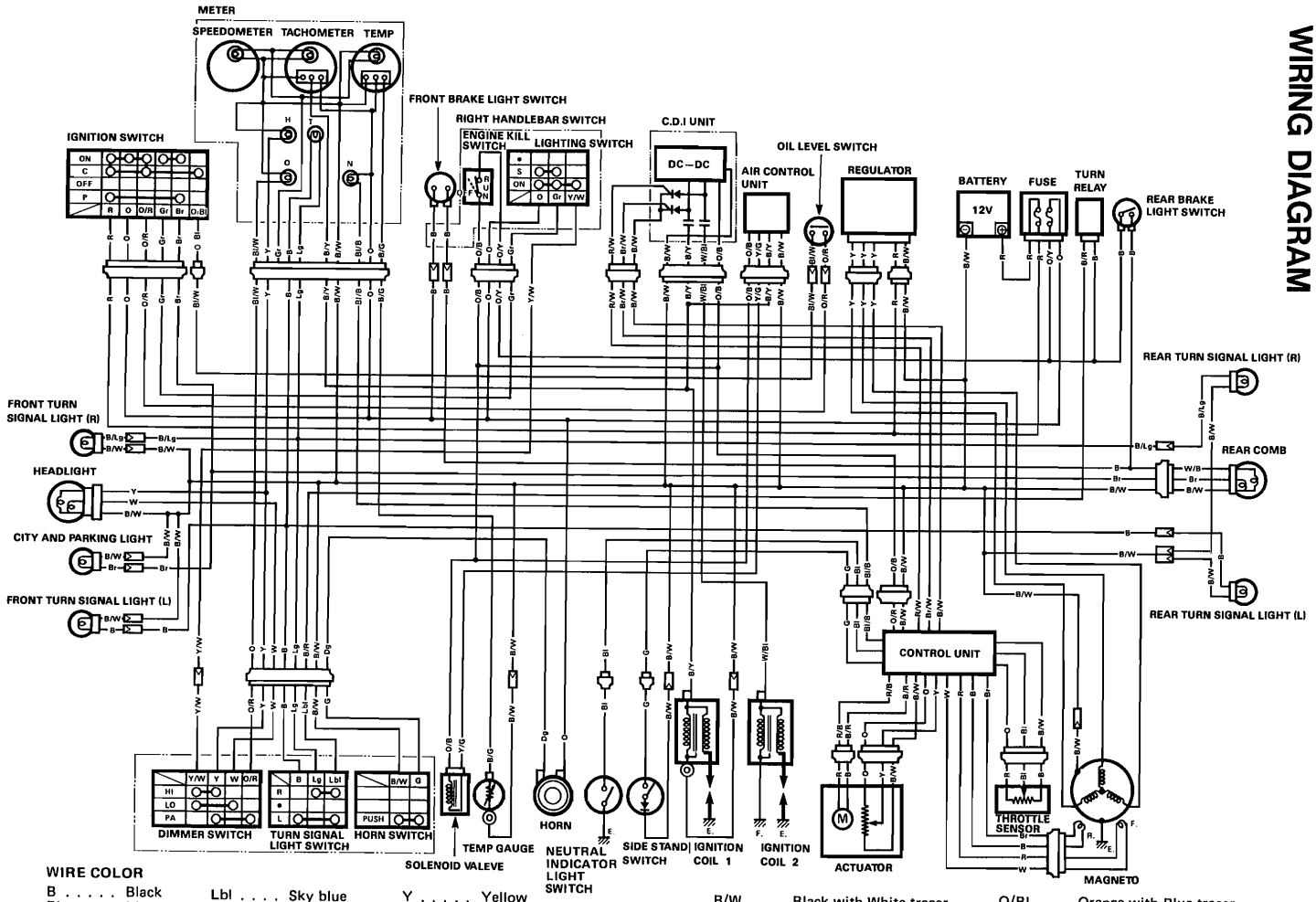

WIRE COLOR

B	Black	Lbl	Sky blue	Y	Yellow	B/W	Black with White tracer
Bl	Blue	Lg	Light green	Dg	Dark green	B/Y	Black with Yellow tracer
Br	Brown	O	Orange	B/Lg	Black with Light green tracer	Bl/B	Blue with Black tracer
G	Green	R	Red	B/G	Black with Green tracer	Bl/W	Blue with White tracer
Gr	Gray	W	White	B/R	Black with Red tracer	O/B	Orange with Black tracer

O/Bl	Orange with Blue tracer		
O/R	Orange with Red tracer		
W/B	White with Black tracer		
W/Bl	White with Blue tracer		
Y/W	Yellow with White tracer		

Downloaded from www.Manualslib.com manuals search engine

WIRE HARNESS

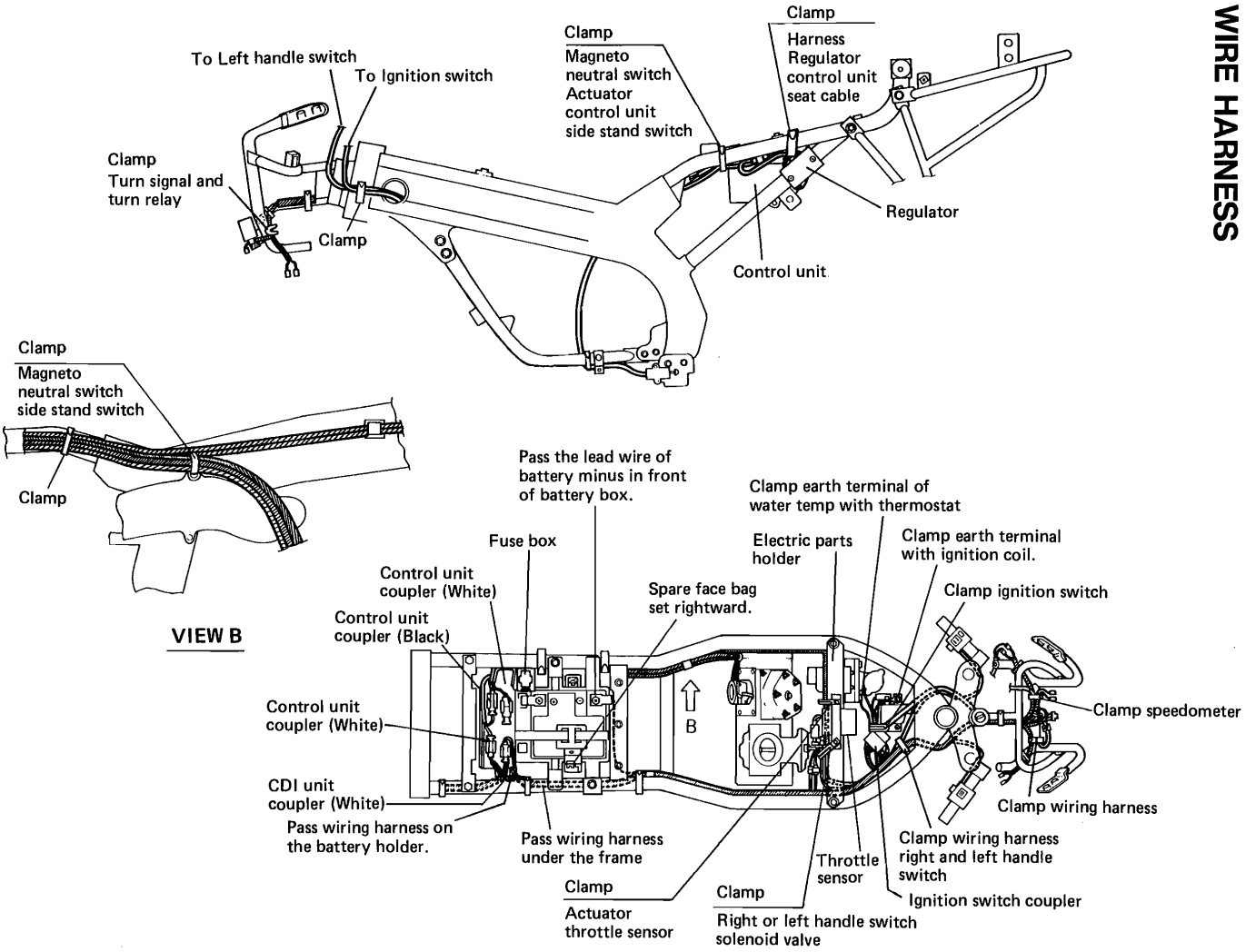

Downloaded from www.Manualslib.com manuals search engine

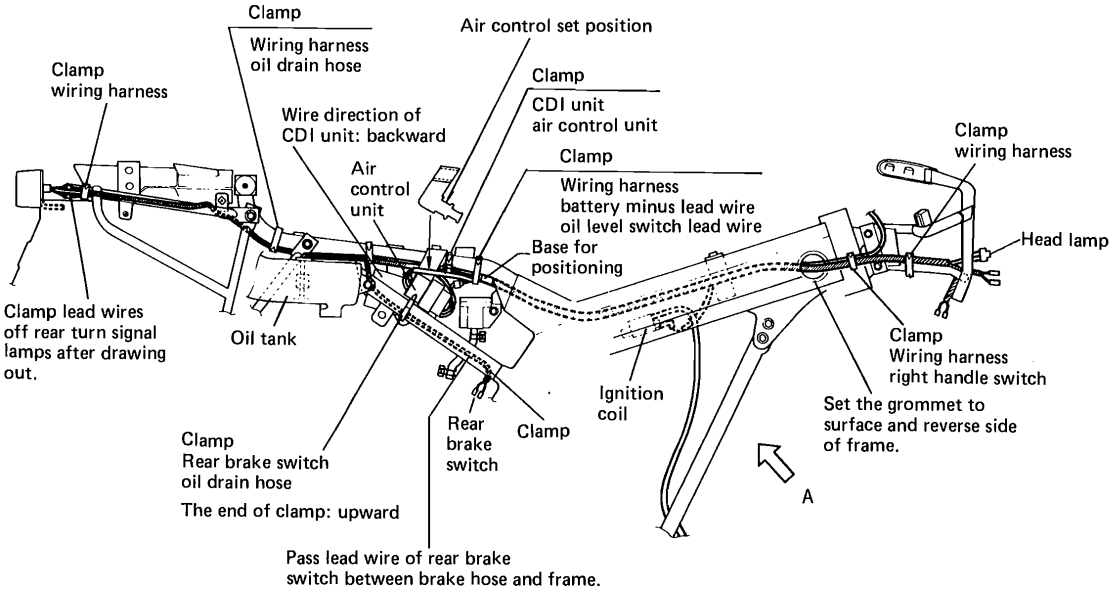

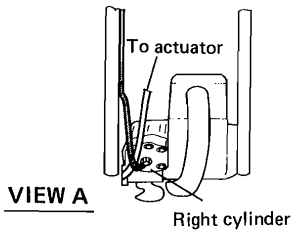

Downloaded from www.Manualslib.com manuals search engine

CABLE ROUTING

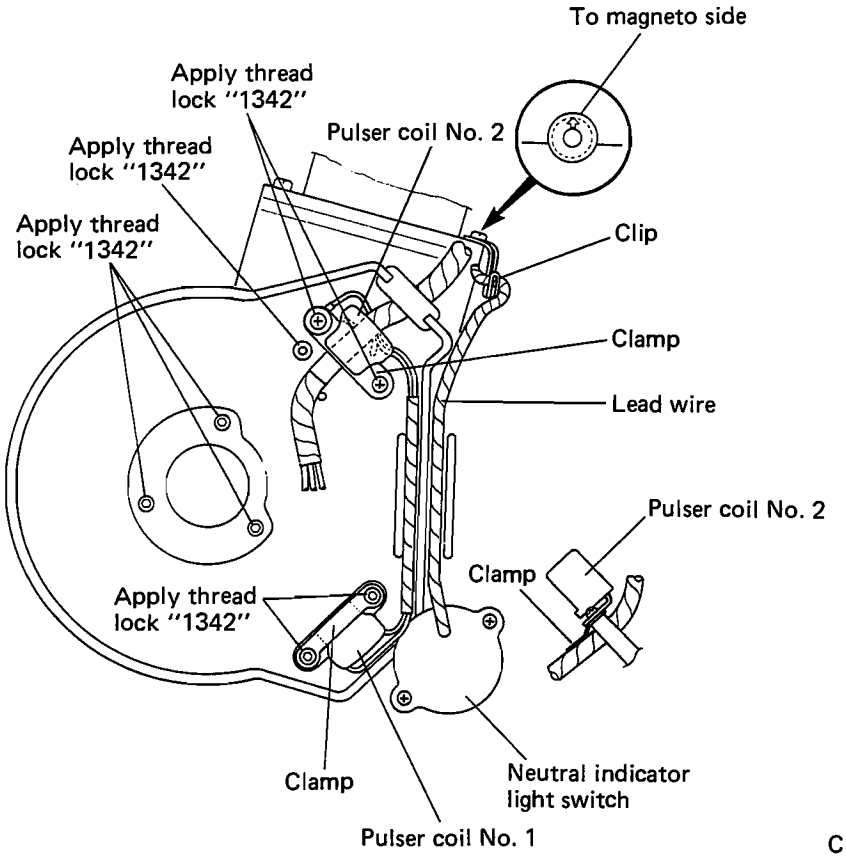

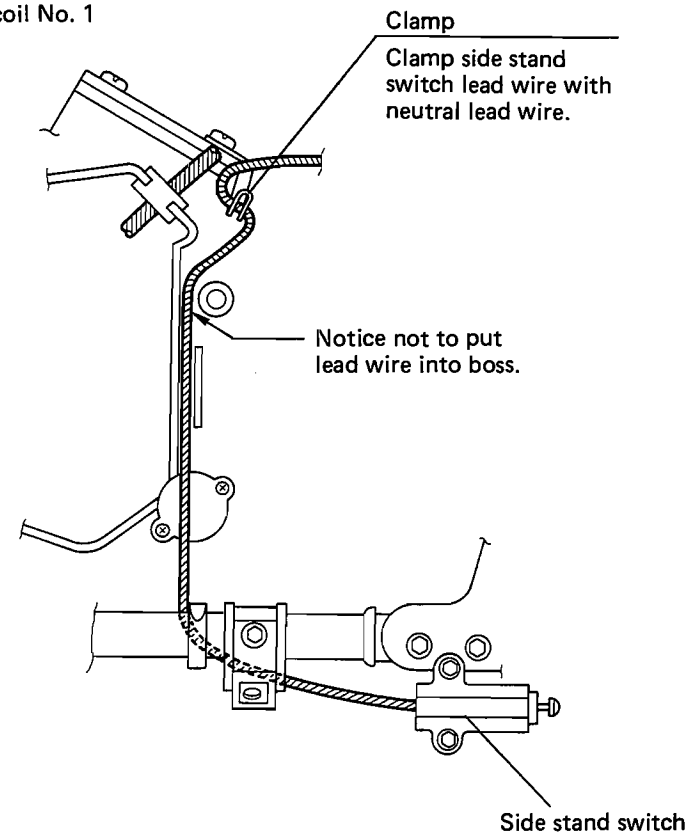

Downloaded from www.Manualslib.com manuals search engine

OIL HOSE ROUTING

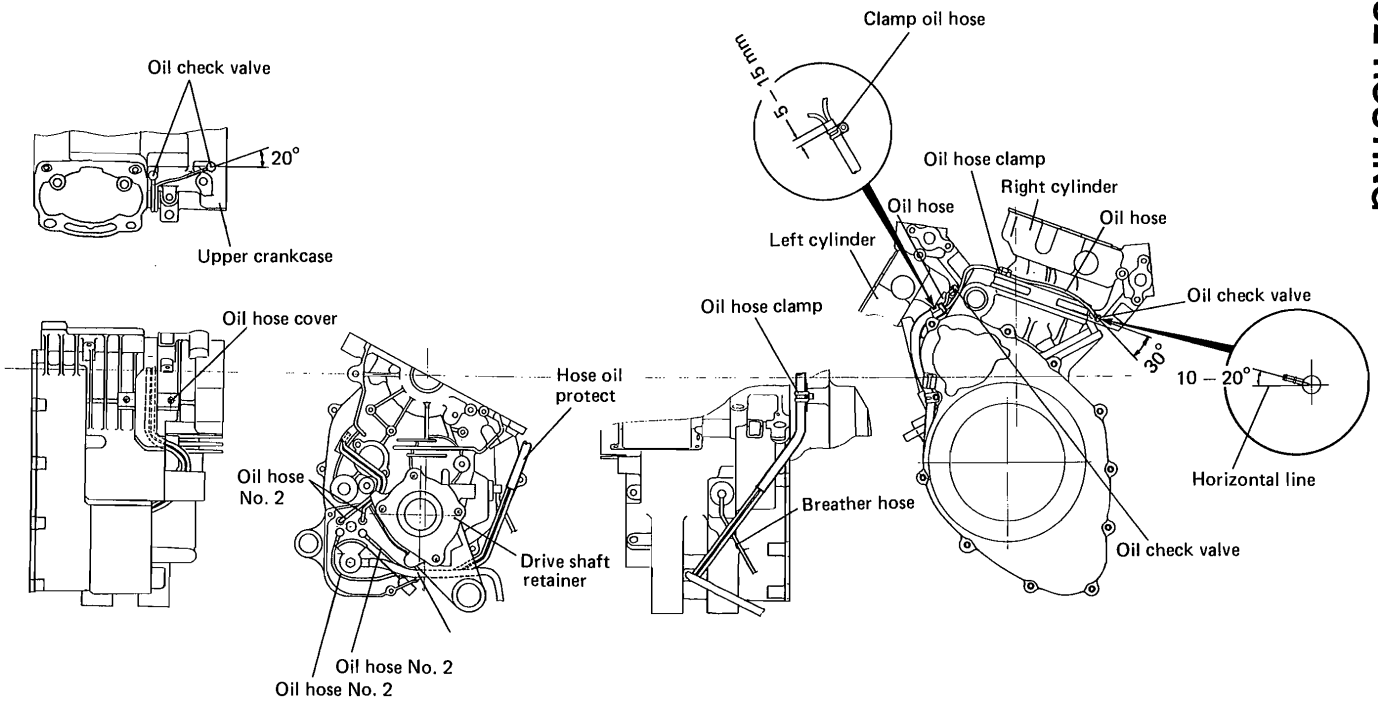

Downloaded from www.Manualslib.com manuals search engine

REAR SHOCK ABSORBER RESERVOIR TANK ROUTING

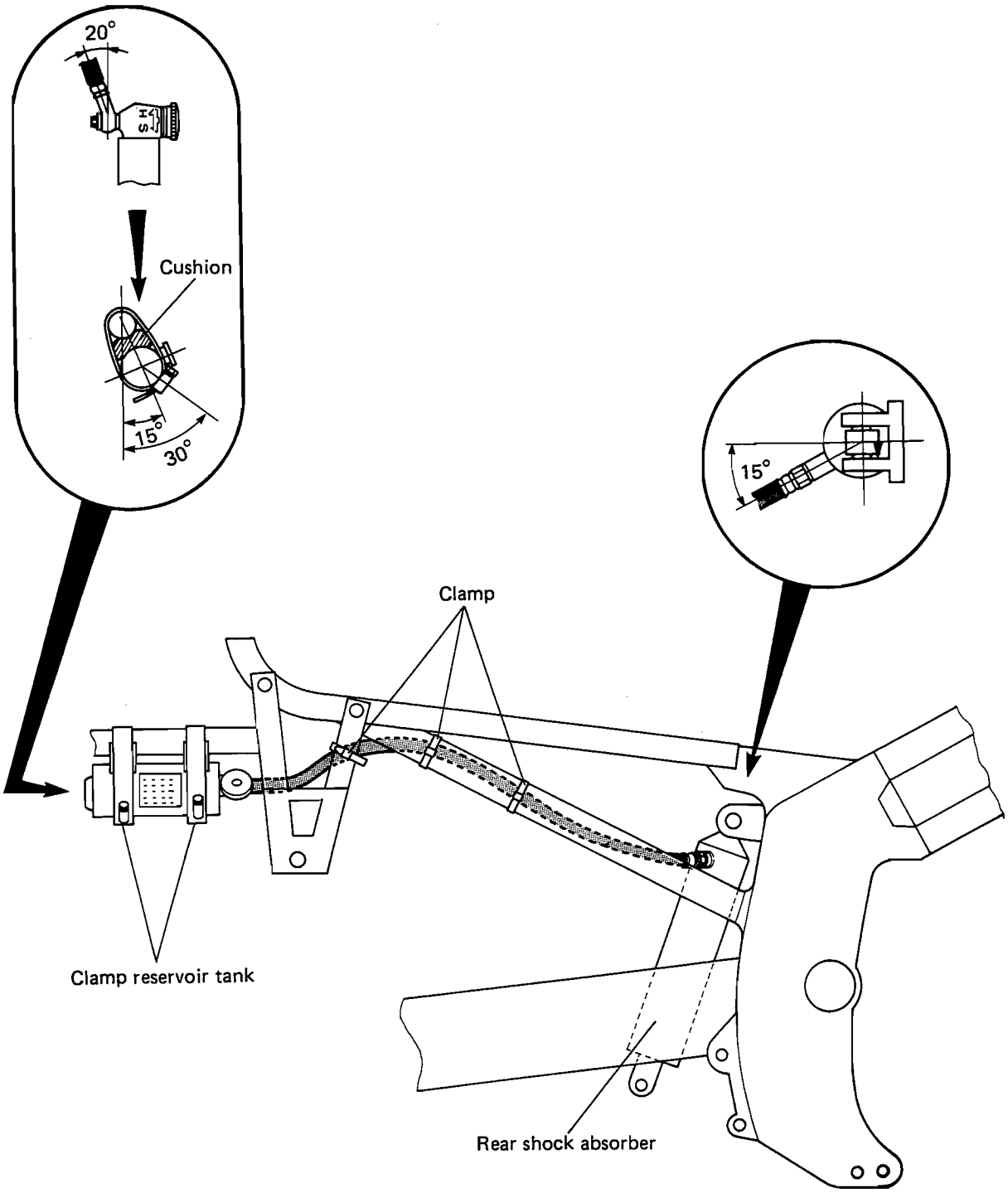

Downloaded from www.Manualslib.com manuals search engine

FUEL AND AIR HOSE ROUTING

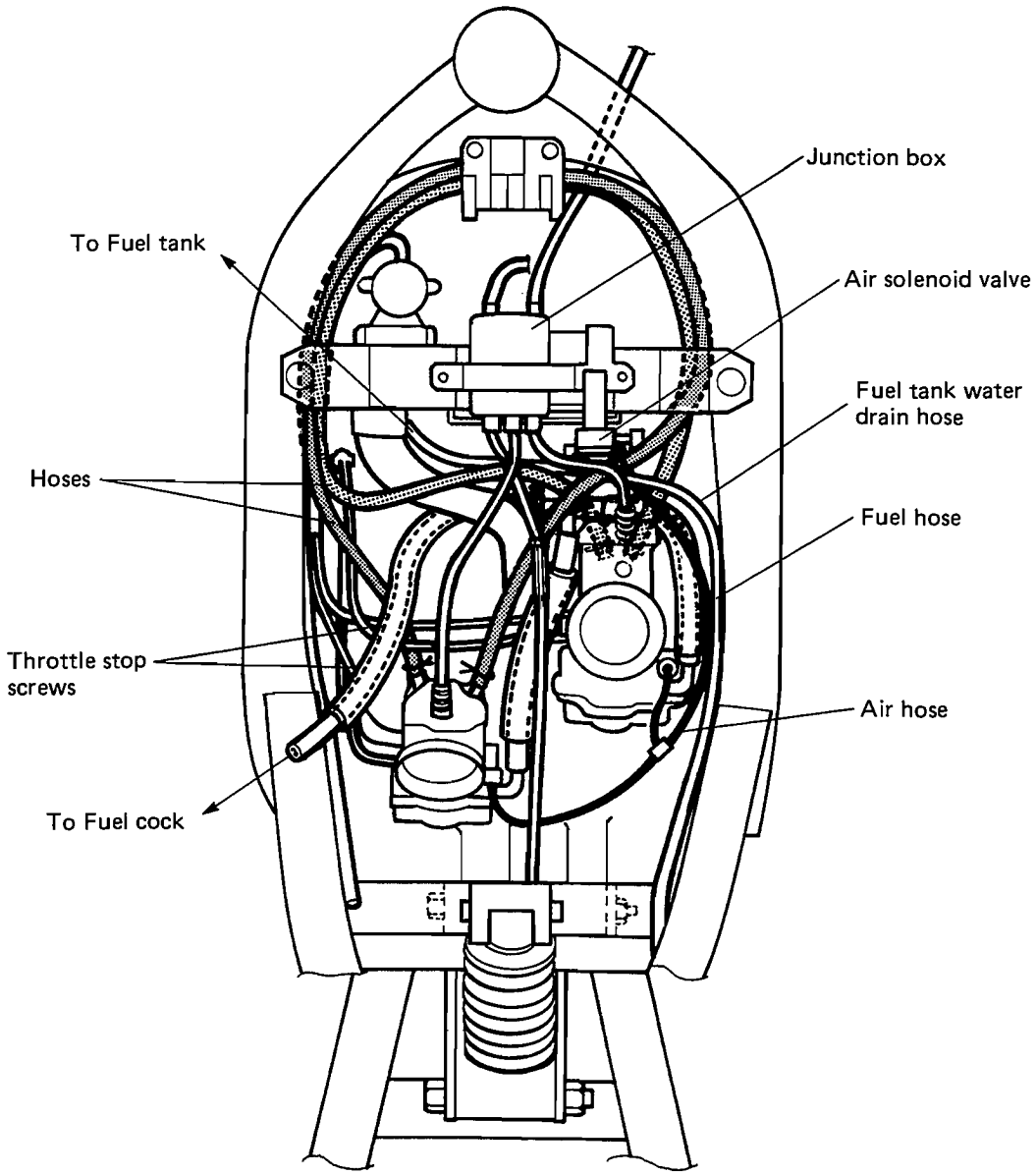

Downloaded from www.Manualslib.com manuals search engine

Downloaded from www.Manualslib.com manuals search engine

RGV250M ('91-MODEL)

FOREWORD

This chapter describes service data, service specifications and servicing procedures which differ from those of the RGV250K ('89-model) and RGV250L ('90-model).

NOTE:
Any differences between "L" ('90-model) and "M" ('91-model) in specifications and service data are clearly indicated with the asterisk marks (*). Refer to the chapters 1 through 9 which are not given in this chapter.

CONTENTS

SPECIFICATIONS 10- 1
SERVICE DATA 10- 2
TIGHTENING TORQUE 10- 7
CHANGES 10- 9
- MAGNETO ROTOR 10- 9
- STATOR 10- 9
- CARBURETOR AIR CONTROL SYSTEM 10-10
- CONTROL UNIT INSPECTION 10-12
- THROTTLE SENSOR 10-14
- EXHAUST VALVE 10-14
- EXHAUST VALVE CABLE 10-16
- EXHAUST VALVE CABLE PULLEY 10-17
- ACTUATOR 10-19
- ADJUSTMENT OF CARBURETOR IDLE ANGLE 10-20
- TRANSMISSION 10-21
- FRONT FORK 10-22
- REAR BRAKE 10-29
- DRIVE CHAIN 10-29
- REAR SUSPENSION 10-33
- FRAME 10-41
- WIRING DIAGRAM 10-42
- WIRE HARNESS ROUTING 10-43
- CABLE ROUTING 10-45
- HOSE ROUTING 10-46
- FRONT BRAKE HOSE ROUTING 10-49
- REAR BRAKE HOSE ROUTING 10-50
- RESERVOIR TANK HOSE ROUTING 10-51

Downloaded from www.Manualslib.com manuals search engine

SPECIFICATIONS

DIMENSIONS AND DRY MASS

Overall length	*1980 mm (77.6 in)
Overall width	* 690 mm (27.2 in)
Overall height	*1070 mm (42.1 in)
Wheelbase	*1380 mm (54.3 in)
Ground clearance	* 125 mm (4.9 in)
Seat height	* 766 mm (30.2 in)
Dry mass	* 139 kg (306 lbs)

ENGINE

Type	Two-stroke, water-cooled, 90° V-twin
Number of cylinders	2
Bore	56.0 mm (2.205 in)
Stroke	50.6 mm (1.992 in)
Piston displacement	249 cm^3 (15.2 cu. in)
Corrected compression ratio	*7.3 : 1
Carburetor	*MIKUNI TM34SS
Air cleaner	Polyurethane foam element
Starter system	Primary kick
Lubrication system	SUZUKI CCI

TRANSMISSION

Clutch	Wet multi-plate type
Transmission	6-speed constant mesh
Gearshift pattern	1-down, 5-up
Primary reduction	2.565 (59/23)
Final reduction	*3.071 (43/14)
Gear ratios, Low	2.454 (27/11)
2nd	1.625 (26/16)
3rd	1.235 (21/17)
4th	1.045 (23/22)
5th	0.916 (22/24)
Top	0.840 (21/25)
Drive chain	DID 520V_2 or *RK520SMOZ$_9$ 114 links

These specifications are subject to change without notice.
Asterisk mark (*) indicates the New "M" model specifications.

CHASSIS

Front suspension	*Inverted telescopic, coil spring, oil damped, inner rod type, spring 5-way, adjustable.
Rear suspension	*Full-floating suspension system, gas/coil spring, oil damped, spring pre-load fully adjustable, extension damping force 4-way and compression damping force 19-way adjustable.
Steering angle	30° (right & left)
Caster	*65°
Trail	*94 mm (3.7 in)
Turning radius	3.1 m (10.2 ft)
Front brake	Disc brake, twin
Rear brake	Disc brake
Front tire size	110/70 R17 54H
Rear tire size	*150/60 R17 66H
Front fork stroke	120 mm (4.7 in)
Rear wheel travel	*130 mm (5.1 in)

ELECTRICAL

Ignition type	SUZUKI "PEI"
Ignition timing	*10° B.T.D.C. at 1300 r/min
Spark plug	*BR9ECM or W27 EMR-C
Battery	12V 10.8 kC (3Ah)/10 HR
Generator	Three-phase A.C. generator
Fuse	*20/10/10/5A

CAPACITIES

Fuel tank including reserve	*16 L (4.2/3.5 US/Imp gal)
reserve	*3.5 L (0.9/0.8 US/Imp gal)
Engine oil	1.1 L (1.2/1.0 US/Imp qt)
Transmission	700 ml (23.7/24.6 US/Imp oz)
Coolant	*1.9 L (2.0/1.7 US/Imp qt)
Front fork oil	429 ml (14.5/15.1 US/Imp oz)

Downloaded from www.Manualslib.com manuals search engine

SERVICE DATA

CYLINDER + PISTON + PISTON RING

Unit: mm (in)

ITEM	STANDARD			LIMIT
Piston to cylinder clearance	*0.055 – 0.071 (0.0022 – 0.0028)			0.120 (0.0047)
Cylinder bore	*56.000 – 56.023 (2.2047 – 2.2056)			Nicks or Scratches
Piston diam.	*55.936 – 55.961 (2.2022 – 2.2032) Measure at 19 (0.7) from the skirt end			55.880 (2.199)
Cylinder distortion	——			0.05 (0.002)
Cylinder head distortion	——			0.05 (0.002)
Piston ring free end gap	1st & 2nd	T	Approx. 5.0 (0.19)	4.0 (0.15)
		T	Approx. *6.0 (0.24)	*4.8 (0.19)
Piston ring end gap	1st & 2nd		0.15 – 0.30 (0.006 – 0.012)	0.70 (0.027)
Piston ring to groove clearance	1st & 2nd		0.02 – 0.06 (0.0008 – 0.0024)	——
Piston pin bore	16.002 – 16.010 (0.6300 – 0.6303)			16.036 (0.6313)
Piston pin O.D.	15.995 – 16.000 (0.6297 – 0.6299)			15.980 (0.6291)

CONROD + CRANKSHAFT

Unit: mm (in)

ITEM	STANDARD	LIMIT
Conrod small end I.D.	20.003 – 20.011 (0.7875 – 0.7878)	20.047 (0.7893)
Conrod deflection	——	3.0 (0.12)
Crank web to web width	$48.5^{+0.2}_{0}$ $(1.909^{+0.008}_{0})$	——
Crankshaft runout	——	0.05 (0.002)

OIL PUMP

ITEM	SPECIFICATION
Oil pump reduction ratio	4.897 (59/23 x 27/11 x 21/27)
CCI pump discharge rate (Full open)	*4.8 – 6.0 ml for 2 minutes at 2 000 r/min.

CLUTCH

Unit: mm (in)

ITEM	STANDARD	LIMIT
Clutch cable play	2 – 3 (0.08 – 0.12)	——
Drive plate thickness	*2.99 – 3.01 (0.118 – 0.119)	*2.69 (0.11)
Drive plate claw width	15.8 – 16.0 (0.62 – 0.63)	15.3 (0.60)

Asterisk mark (*) indicates the New "M" model specifications.

Downloaded from www.Manualslib.com manuals search engine

ITEM	STANDARD	LIMIT
Driven plate distortion	——	0.1 (0.004)
Clutch spring free length	——	34.8 (1.37)

THERMOSTAT + RADIATOR

ITEM	STANDARD	LIMIT
Thermostat valve opening temperature	50 ± 2°C	——
Thermostat valve lift	Over 7 mm at 65°C	——
Radiator cap valve opening pressure	110 kPa (1.1 kg/cm²)	——

TRANSMISSION

Unit: mm (in) Except ratio

ITEM	STANDARD		LIMIT
Primary reduction ratio	2.565 (59/23)		——
Final reduction ratio	*3.071 (43/14)		——
Gear ratios	Low	2.454 (27/11)	——
	2nd	1.625 (26/16)	——
	3rd	1.235 (21/17)	——
	4th	1.045 (23/22)	——
	5th	0.916 (22/24)	——
	Top	0.840 (21/25)	——
Shift fork to groove clearance	0.1 – 0.3 (0.004 – 0.011)		0.5 (0.0196)
Shift fork groove width	No. 1 & No. 2	4.0 – 4.1 (0.157 – 0.161)	——
	No. 3	5.5 – 5.6 (0.216 – 0.220)	——
Shift fork thickness	No. 1 & No. 2	3.8 – 3.9 (0.149 – 0.153)	——
	No. 3	5.3 – 5.4 (0.208 – 0.212)	——

DRIVE CHAIN

ITEM	STANDARD		LIMIT
Drive chain	Type	D.I.D.: 520 V2 *TAKASAGO: 520SMOZ9	——
	Links	114 links	——
	20-pitch length	——	319.4 (12.574)
Drive chain slack	*25 – 35 (0.98 – 1.38)		——

CARBURETOR

ITEM	SPECIFICATION		
	E-02,04,21,24,34	E-01	E-22
Carburetor type	*MIKUNI TM34SS	←	←
Bore size	*34 mm (1.34 in)	←	←
I.D. No	*22D2	*22D4	*22D3

Asterisk mark (*) indicates the New "M" model specifications.

Downloaded from www.Manualslib.com manuals search engine

ITEM		SPECIFICATION		
		E-02,04,21,24,34	E-01	E-22
Idle r/min.		1 300±150 r/min	←	1 300±100 r/min
Fuel level		7.1±0.5 mm (0.28±0.02 in)	←	←
Float height		8±1.0 mm (0.31±0.04 in)	←	←
Main jet	(M.J.)	*L:#270,*R:#280	*#270	*L:#270,*R:#280
Jet needle	(J.N.)	6GH8-55-3	*L:6FL85-55-3, *R:6FLD86-56-2	*6GH8-55-3
Needle jet	(N.J.)	*0—8	←	0—9
Cut-away	(C.A.)	1.5 mm	←	←
Pilot jet	(P.J.)	#27.5	←	#20
By-pass	(B.P.)	0.6 mm	←	←
Pilot outlet	(P.O.)	0.6 mm	←	←
Valve seat	(V.S.)	2.5 mm	←	←
Starter jet	(G.S.)	*#45	←	←
Power jet	No. 1	*L:#55,*R:#35	*L:#55,*R:#45	*L:#55,*R:#35
Power jet	No. 2	*0.7 mm	←	←
Throttle cable play		0.5—1.0 mm (0.02—0.04 in)	←	←

ELECTRICAL

Unit: mm (in)

ITEM	SPECIFICATION		NOTE
Ignition timing	*10° B.T.D.C. at 1 300 r/min.		
Spark plug	Type	*NGK BR9ECM *ND W27EMR-C	
	Gap	0.7 – 0.8	
Spark performance	Over 8 (0.3) at 1 atm.		
Ignition coil resistance	Primary	B/Y – W/L 0.17 – 0.23 Ω	
	Secondary	Plug cap – Terminal 15 – 20 kΩ	
Generator coil resistance	Y – Y 0.4 – 0.6 Ω		
Magneto coil resistance	Pick up coil	Br – B 80 – 120 Ω	
		R – W 80 – 120 Ω	
Generator no-load voltage	More than 49 V (AC) at 5 000 r/min.		Y – Y
Regulated voltage	13.0 – 15.5 V at 5 000 r/min.		
Water temperature gauge resistance	*189 – 260 Ω at 50°C		
	* 24 – 28 Ω at 115°C		
Battery	Type designation	YT4L-BS	
	Capacity	12V 10.8 kC (3Ah)/10 HR	
	Standard electrolyte S.G.	1.32 at 20°C (68°F)	
Fuse size	Main	20 A	
	Ignition	5 A	
	*Head	10 A	
	*Tail	10 A	

Asterisk mark (*) indicates the New "M" model specifications.

Downloaded from www.Manualslib.com manuals search engine

WATTAGE

Unit: W

ITEM		SPECIFICATION
Headlight	HI	60
	LO	55
Tail/Brake light		5/21
Turn signal light		21
Tachometer light		3
Speedometer light		3
Turn signal indicator light		*2
High beam indicator light		*2
Neutral indicator light		*2
Oil level warning light		*2
Parking or city light		4
Water temp. meter light		1.7

BRAKE + WHEEL

Unit: mm (in)

ITEM		STANDARD	LIMIT
Rear brake pedal height		*60 – 70 (2.36 – 2.76)	——
Brake disc thickness	Front	4.3 – 4.7 (0.17 – 0.18)	4.0 (0.16)
	Rear	4.8 – 5.1 (0.19 – 0.20)	4.5 (0.18)
Brake disc runout		——	0.3 (0.01)
Master cylinder bore	Front	15.870 – 15.913 (0.6248 – 0.6264)	——
	Rear	12.700 – 12.743 (0.4999 – 0.5016)	——
Master cylinder piston	Front	15.827 – 15.854 (0.6231 – 0.6241)	——
	Rear	12.657 – 12.684 (0.4983 – 0.4993)	——
Brake caliper cylinder bore	Front	30.230 – 30.300 (1.1901 – 1.1929) 33.960 – 34.030 (1.3370 – 1.3397)	——
	Rear	*24.000 – 24.076 (0.9449 – 0.9479)	——
Brake caliper piston diam.	Front	30.160 – 30.200 (1.1873 – 1.1889) 33.897 – 33.930 (1.3345 – 1.3358)	——
	Rear	*23.950 – 24.000 (0.9429 – 0.9449)	——
Wheel rim runout	Axial	——	2.0 (0.08)
	Radial	——	2.0 (0.08)
Wheel axle runout	Front	——	0.25 (0.010)
	Rear	——	0.25 (0.010)

Asterisk mark (*) indicates the New "M" model specifications.

Downloaded from www.Manualslib.com manuals search engine

ITEM	STANDARD		LIMIT
Tire size	Front	110/70 R17 54H	——
	Rear	*150/60 R17 66H	——
Tire tread depth	Front	——	1.6 (0.06)
	Rear	——	2.0 (0.08)

SUSPENSION

Unit: mm (in)

ITEM	STANDARD	LIMIT	NOTE
Front fork stroke	120 (4.7)	——	
Front fork spring free length	——	*330 (13.0)	
Front fork oil level	*109 (4.29)	——	
Rear wheel travel	*130 (5.1)	——	
Swingarm pivot shaft runout	——	0.3	

FUEL + OIL + COOLANT

ITEM	SPECIFICATION		NOTE
Fuel type	The gasoline used should be graded 85 to 95 octane in Research Method and should be unleaded type where they are available.		
Fuel tank including reserve	*16 L (4.2/3.5 US/Imp gal)		
reserve	*3.5 L (0.9/0.8 US/Imp gal)		
Engine oil type	SUZUKI CCI or CCI SUPER OIL		
Engine oil tank capacity	1.1 L (1.2/1.0 US/Imp qt)		
Transmission oil type	SAE 10W/40		
Transmission oil capacity	Change	700 ml (23.6/24.6 US/Imp oz)	
	Overhaul	800 ml (27.0/28.1 US/Imp oz)	
Front fork oil type	Fork oil # 10		
Front fork oil capacity (each leg)	429 ml (14.5/15.1 US/Imp oz)		
Brake fluid type	DOT4		
Coolant type	Use an anti-freeze & Summer coolant compatible with aluminum radiator, mixed with distilled water only, at the ratio of 50 : 50.		
Radiator including reserve	*1 900 ml (2.0/1.7 US/Imp qt)		

Asterisk mark (*) indicates the New "M" model specifications.

Downloaded from www.Manualslib.com manuals search engine

TIRE PRESSURE

COLD INFLATION TIRE PRESSURE	NORMAL RIDING					
	SOLO RIDING			DUAL RIDING		
	kPa	kg/cm²	psi	kPa	kg/cm²	psi
FRONT	200	2.00	29	200	2.00	29
REAR	225	2.25	33	250	2.50	36

TIGHTENING TORQUE

ENGINE

Item		N·m	kg·m	lb·ft
Transmission oil drain plug	14 mm	20 – 25	2.0 – 2.5	14.5 – 18.0
Coolant drain plug		8 – 12	0.8 – 1.2	6.0 – 8.5
Exhaust pipe clamp nut		18 – 28	1.8 – 2.8	13.0 – 20.0
Muffler mounting bolt		18 – 28	1.8 – 2.8	13.0 – 20.0
Engine mounting nut	10 mm	60 – 72	6.0 – 7.2	43.5 – 52.0
	8 mm	28 – 34	2.8 – 3.4	20.0 – 24.5
Engine mounting bracket bolt		18 – 28	1.8 – 2.8	13.0 – 20.0
Down tube		22 – 28	2.2 – 2.8	16.0 – 20.0
Kick starter lever bolt		18 – 28	1.8 – 2.8	13.0 – 20.0
Cylinder head nut		*26 – 27	2.6 – 2.7	19.0 – 19.5
Cylinder nut		*26 – 27	2.6 – 2.7	19.0 – 19.5
Crankcase bolt	6 mm	9 – 13	0.9 – 1.3	6.5 – 9.5
	8 mm	20 – 24	2.0 – 2.4	14.5 – 17.5
Gearshift arm stopper		15 – 23	1.5 – 2.3	11.0 – 16.5
Primary drive gear nut		60 – 80	6.0 – 8.0	43.5 – 58.0
Water pump cover bolt		6 – 10	0.6 – 1.0	4.5 – 7.0
Transmission cover nut		8 – 12	0.8 – 1.2	6.0 – 8.5
Clutch sleeve hub nut		60 – 80	6.0 – 8.0	43.5 – 58.0
Clutch spring bolt		8 – 12	0.8 – 1.2	6.0 – 8.5
Clutch cover bolt		6 – 10	0.6 – 1.0	4.5 – 7.0
Magneto rotor nut		*75 – 85	7.5 – 8.5	54.0 – 61.5
Water pump impeller bolt		7 – 9	0.7 – 0.9	5.0 – 6.5
Water temp gauge		6 – 10	0.6 – 1.0	4.5 – 7.0

Asterisk mark (*) indicates the New "M" model specifications.

Downloaded from www.Manualslib.com manuals search engine

CHASSIS

Item	N·m	kg-m	lb-ft
Steering stem head nut	* 50 – 80	5.0 – 8.0	36.0 – 58.0
Front fork upper clamp bolt	* 20 – 31	2.0 – 3.1	14.5 – 22.5
Front fork lower clamp bolt	* 18 – 28	1.8 – 2.8	13.0 – 20.0
Front fork cap	* 30 – 40	3.0 – 4.0	21.5 – 29.0
Front axle shaft	50 – 80	5.0 – 8.0	36.0 – 58.0
Front axle clamp bolt	* 18 – 28	1.8 – 2.8	13.0 – 20.0
Handlebars mounting bolt	* 18 – 28	1.8 – 2.8	13.0 – 20.0
Front brake master cylinder mounting bolt	5 – 8	0.5 – 0.8	3.5 – 6.0
Front caliper mounting bolt	* 30 – 48	3.0 – 4.8	21.5 – 35.0
Front caliper housing bolt	* 15 – 20	1.5 – 2.0	11.0 – 14.5
Brake hose union bolt	15 – 20	1.5 – 2.0	11.0 – 14.5
Air bleeder valve (Front and rear)	6 – 9	0.6 – 0.9	4.5 – 6.5
Front and rear disc bolt	* 18 – 28	1.8 – 2.8	13.0 – 20.0
Swingarm pivot nut	* 85 – 115	8.5 – 11.5	61.5 – 83.0
Rear brake rod lock nut	15 – 25	1.5 – 2.5	11.0 – 18.0
Rear shock absorber mounting nut (Upper and lower)	* 48 – 72	4.8 – 7.2	35.0 – 52.0
Rear cushion lever nut	* 84 – 120	8.4 – 12.0	61.0 – 87.0
Rear cushion rod nut (Upper and lower)	* 84 – 120	8.4 – 12.0	61.0 – 87.0
Rear caliper mounting bolt	* 20 – 31	2.0 – 3.1	14.5 – 22.5
Rear master cylinder mounting bolt	8 – 12	0.8 – 1.2	6.0 – 8.5
Rear axle nut	85 – 115	8.5 – 11.5	61.5 – 83.0
Rear sprocket nut	20 – 30	2.0 – 3.0	14.5 – 21.5
Front footrest bolt	* 18 – 28	1.8 – 2.8	13.0 – 20.0
Rear brake master cylinder union bolt	15 – 20	1.5 – 2.0	11.0 – 18.0
Rear brake caliper hose union bolt	15 – 20	1.5 – 2.0	11.0 – 18.0
Seat rail mounting bolt	* 45 – 50	4.5 – 5.0	32.5 – 36.0

Asterisk mark (*) indicates the New "M" model specifications.
Apply THREAD LOCK SUPER "1322" to the rear caliper mounting bolts and seat rail mounting bolts.

Downloaded from www.Manualslib.com manuals search engine

CHANGES

The following changes have been made, beginning with the RGV250M ('91-model).

MAGNETO ROTOR

DISASSEMBLY

- Remove the magneto rotor nut ① by holding the rotor with the special tool.

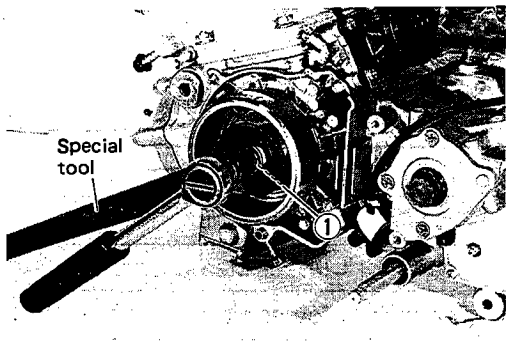

09930-44520: Rotor holder

- Remove the rotor with the special tool.

09930-34980: Rotor remover

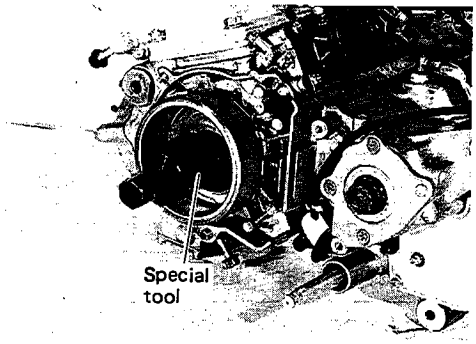

REASSEMBLY

- Wipe off the oily matter from the tapered portion of the rotor and also the crankshaft.
- Apply THREAD LOCK SUPER "1324" to the nut and tighten it to the specified torque.

99000-32120: THREAD LOCK SUPER "1324"
09930-44520: Rotor holder

Tightening torque: 75 – 85 N·m (7.5 – 8.5 kg-m)

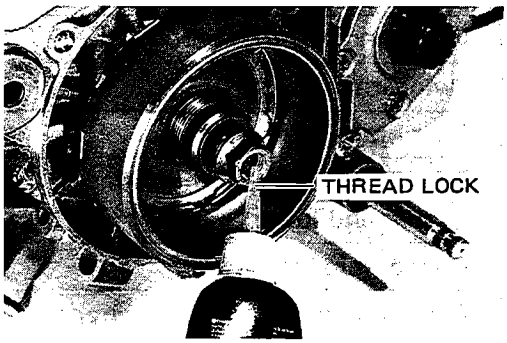

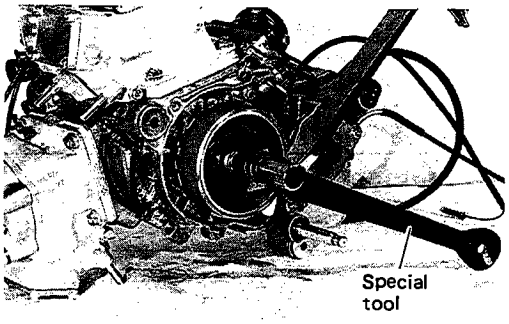

STATOR

REASSEMBLY

- Apply THREAD LOCK "1342" to the signal generator bolts and stator bolts, and tighten them to the specified torque.

① : Stator coil
② : Signal generator

99000-32050: THREAD LOCK "1342"

Tightening torque: 6 – 10 N·m (0.6 – 1.0 kg-m)

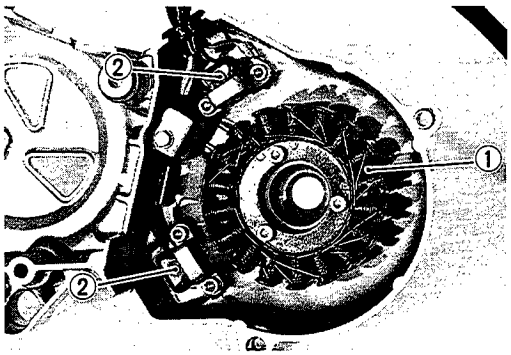

Downloaded from www.Manualslib.com manuals search engine

CARBURETOR AIR CONTROL SYSTEM

DESCRIPTION

The carburetor uses a flat slide type throttle valve which helps make main bore air flow smoother and provide better fuel atomization, resulting in quicker engine response. This carburetor is in its air control system which supplies electronically controlled auxiliary air to the pilot air and main air passages. This control is performed by the control unit which receives the throttle sensor and engine revolution input signals. And after processing these signals, the unit outputs an ON/OFF signal to allow the optimum amount of air to pass through the solenoid or duty solenoid.

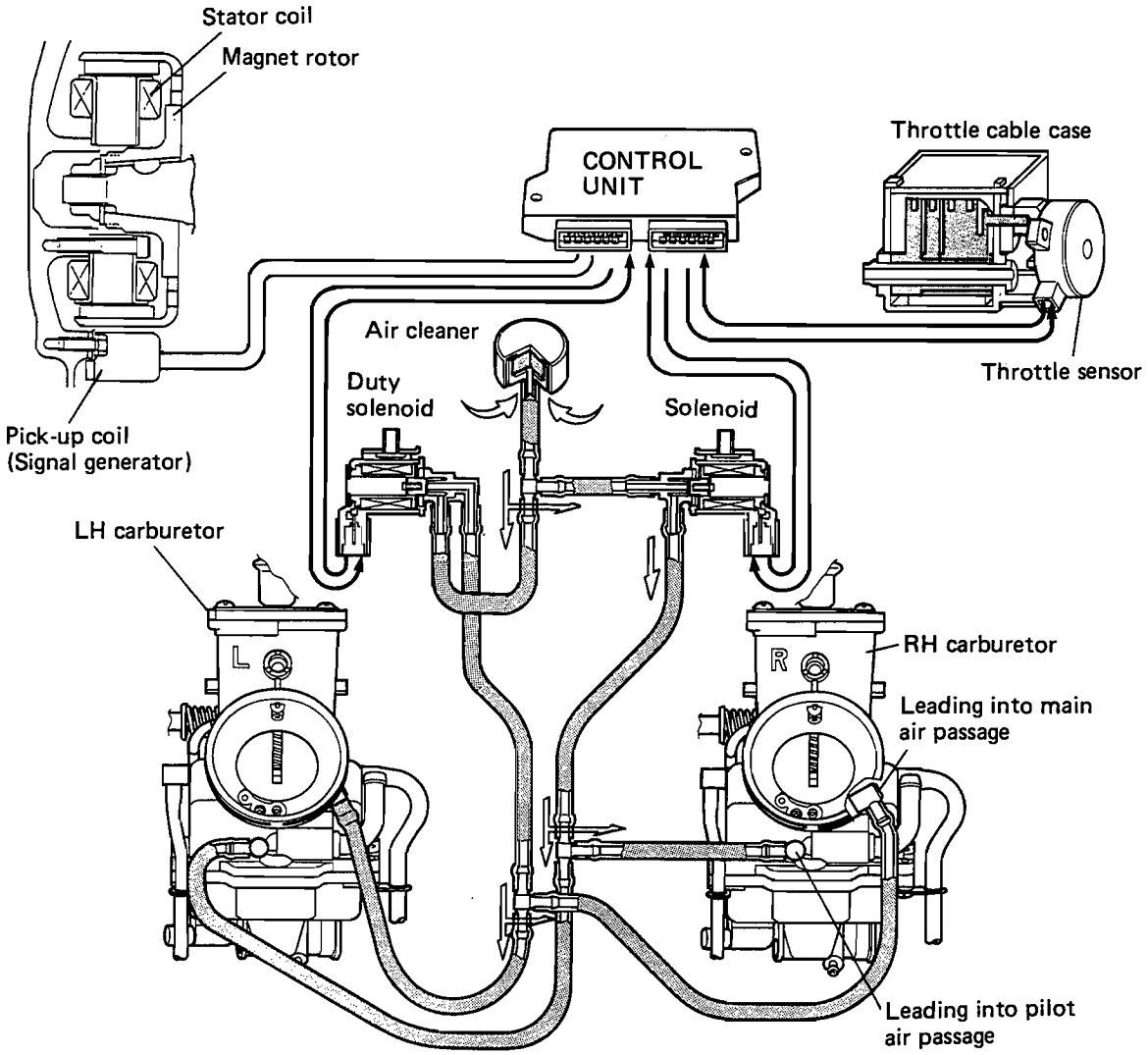

Downloaded from www.Manualslib.com manuals search engine

PILOT AIR PASSAGE

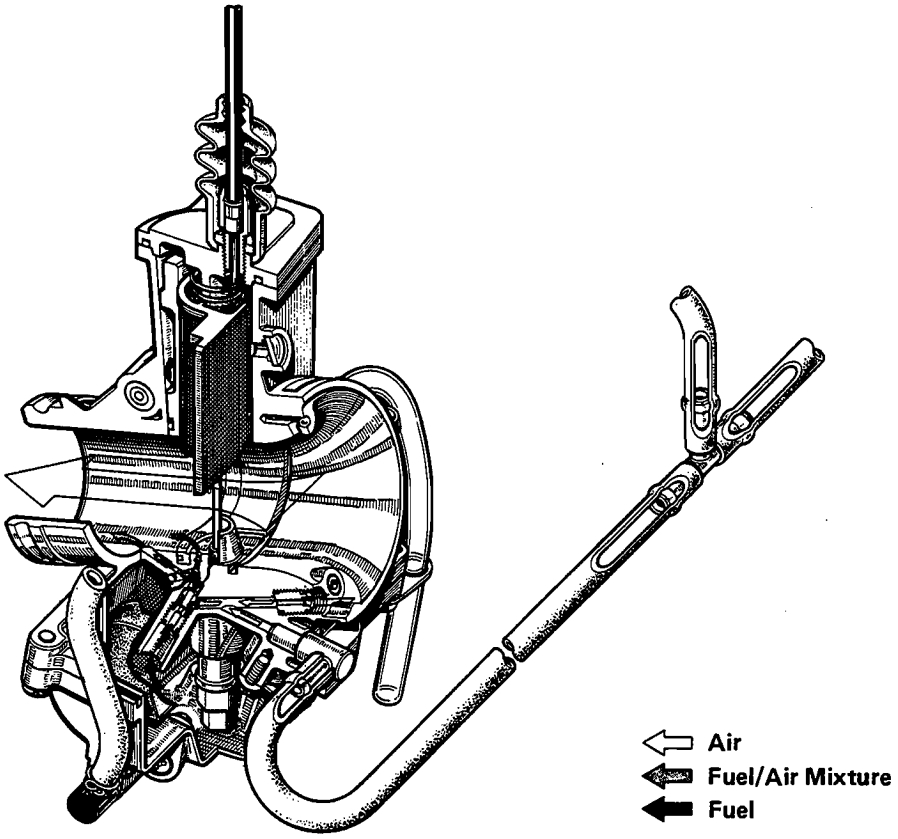

MAIN AIR PASSAGE

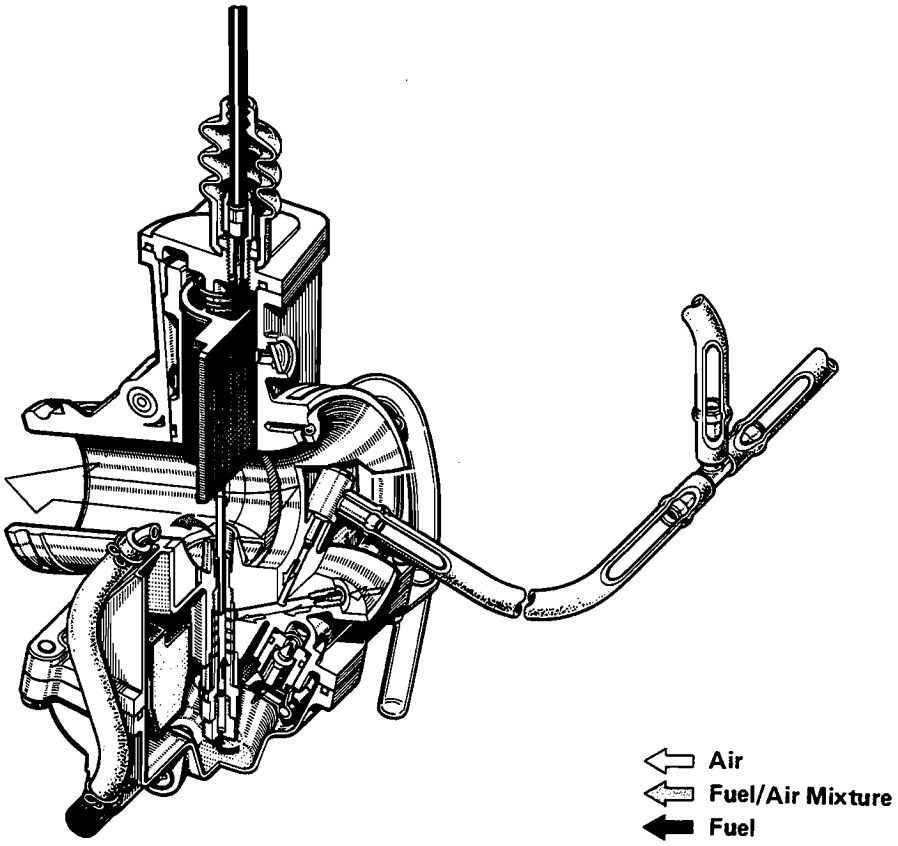

Downloaded from www.Manualslib.com manuals search engine

CONTROL UNIT INSPECTION

CONNECTION PROCEDURE

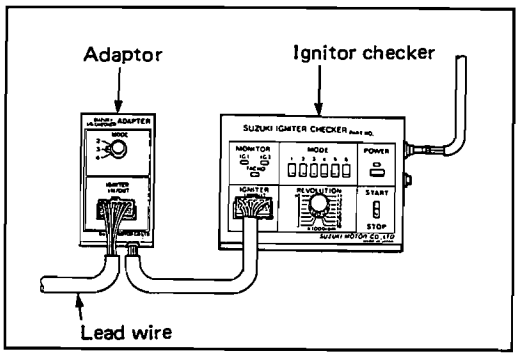

09931-94430: Ignitor checker
09931-94460: Adaptor
09931-64480: Lead wire (RGV250 MODE4)
09900-25002: Pocket tester

- Remove the seat.
- Remove the fuel tank.
- Remove the right side cowling.
- Remove the spark plugs from the No. 1 and No. 2 cylinder heads.
- Connect the "ADAPTOR" and "MODE 4" lead to the ignitor checker as shown in the photograph.
- Disconnect the coupler Ⓐ (pick-up coil) going to the control unit from the wiring harness and connect the lead wire to this coupler Ⓐ.
- Connect the power source leads to the battery.

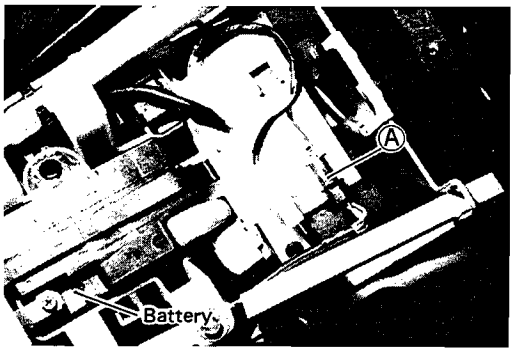

CAUTION:

* **Do not use the battery equipped on the motorcycle.**
* **Be sure to connect the black lead to the battery ⊖ terminal and red lead to the ⊕ terminal.**
* **Make sure "START" switch is in "off" position before connecting the power source lead.**

NOTE:
When making this test, be sure that the battery is fully charged condition.

1. SPARKING CHECK

- Place the spark plugs on each cylinder head.
- Turn on the ignition switch and set the engine stop switch to "RUN" position.
- Set the "REVOLUTION" dial to " 2" position.
- Depress the "MODE 4" button on the ignitor checker.
- Set the "MODE" knob on the adaptor to "4" position.
- Depress the "POWER" button.
- Turn the switch to "START" position.
- Check the sparking condition of No.1 cylinder's plug and No. 2 cylinder's plug.
- Check the sparking condition at the high revolution range (Turn the "REVOLUTION" dial to high rpm side).
- If no sparking, check or replace the ignition coil.

2. TACHOMETER CHECK

- Turning the "REVOLUTION" dial gradually to high rpm side, ensure that the tachometer reads same rpm coincidently.

Downloaded from www.Manualslib.com manuals search engine

3. ACTUATOR CHECK

NOTE:
Make sure "START" switch and "POWER" button are in "off" positions after checking the 1 and 2 items.

- Depress the "**MODE 3**" button on the ignitor checker.
- Set the "MODE" knob on the adaptor to "**3**" position.
- Depress the "POWER" button.
- Turn the switch to "START" position.
- Turning the "REVOLUTION" dial gradually to check the following positions by moving the exhaust valve.

  At 2 000 rpm — Cleaning operation of exhaust valve. (Only one time)
  At 8 000 rpm — Exhaust valve is set on the half open position.
  At 10 000 rpm — Exhaust valve is set on the full open position.

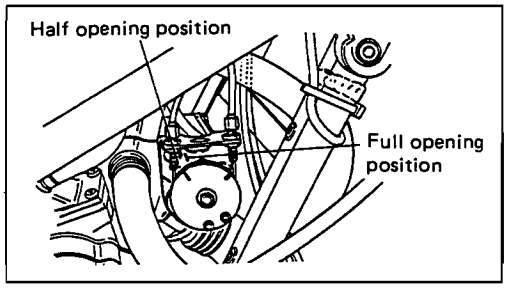

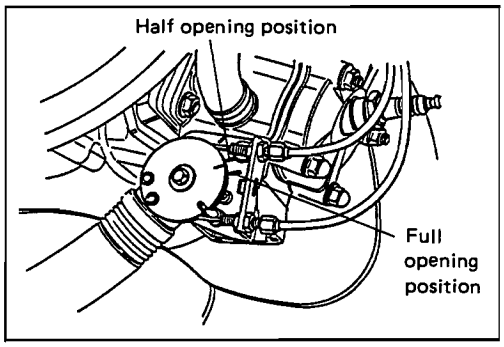

4. SOLENOID VALVE CHECK

- Check the operation of SOLENOID VALVE with the pocket tester (range: DC 25V).
- Insert a ⊖ probe of pocket tester to the Y/G lead wire's coupler and a ⊕ probe of pocket tester to the O/B lead wire's coupler.
- Turning the "REVOLUTION" dial gradually to check the following operations at the specified rpm.

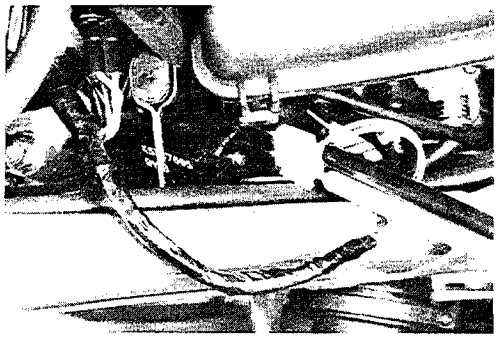

(UNIT NO.: 23D00 For E-22 model)
At 2 000 rpm — "OFF"
At 4 000 rpm — "ON"
At 6 000 rpm — "OFF"

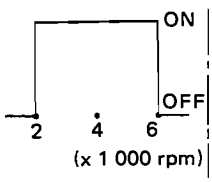

(UNIT NO.: 22D30 For E-02,04,21,24 and 34 models)
At 500 rpm — "OFF"
At 1 000 rpm — "ON"
At 2 000 rpm — "OFF"

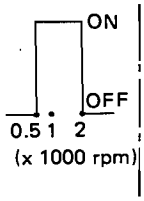

(UNIT NO.: 22D10 For E-01 model)
At 500 rpm — "OFF"
At 1 000 rpm — "ON"
At 2 000 rpm — "OFF"
At 4 000 rpm — "ON"
At 6 000 rpm — "OFF"

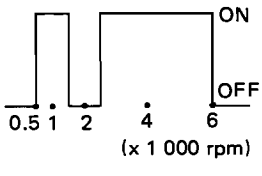

5. DUTY SOLENOID VALVE CHECK

NOTE:
Make sure "START" switch and "POWER" button are in "off" positions after checking the 3 and 4 items.

- Depress the "**MODE 4**" button on the ignitor checker.
- Set the "MODE" knob on the adaptor to "**4**" position.
- Depress the "POWER" button.
- Turn the switch to "START" position.
- Check the operation of DUTY SOLENOID by "click" sound.
- The operation of duty solenoid valve for open and close conditions by the throttle grip opening angle is as follows.

(UNIT NO.: 23D00 and 22D30 For E-22,02,04,21, 24 and 34 models)

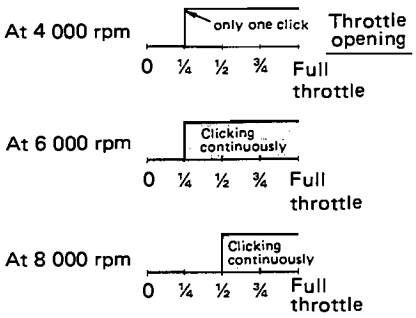

(UNIT NO.: 22D10 For E-01 model)

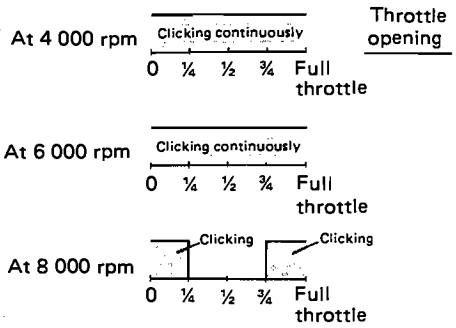

Downloaded from www.Manualslib.com manuals search engine

THROTTLE SENSOR

CAUTION:
Do not remove the throttle sensor mounting screws. This component is PRE-SET at the factory by the very specialized equipment.

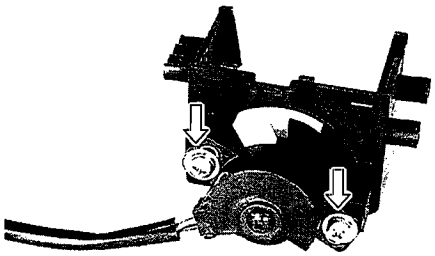

EXHAUST VALVE

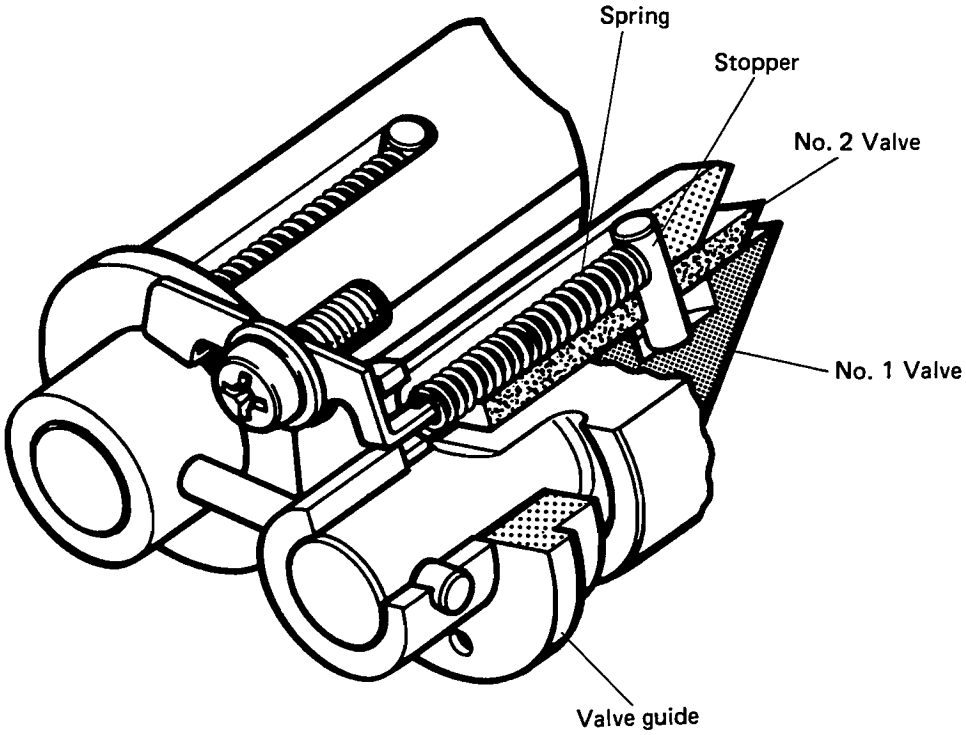

OPERATION

LOW SPEED RANGE

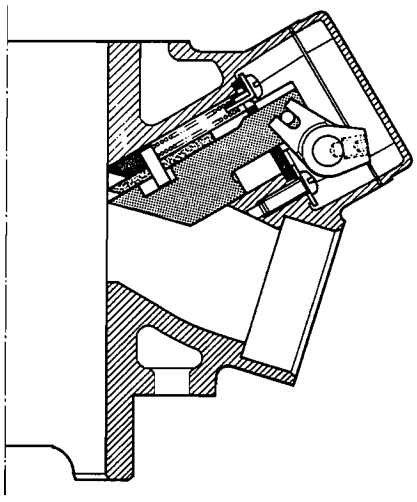

MIDDLE SPEED RANGE

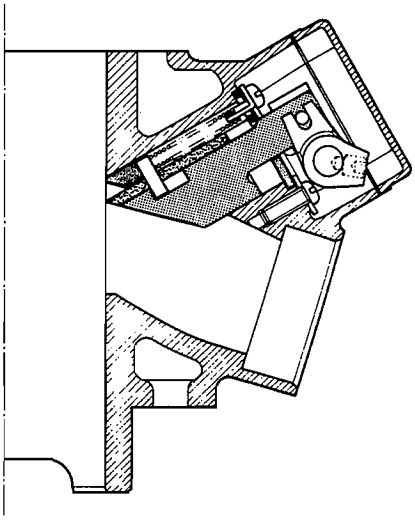

HIGH SPEED RANGE

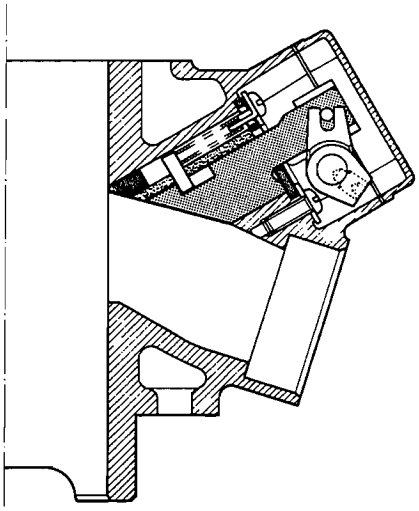

Downloaded from www.Manualslib.com manuals search engine

REMOVAL

- Remove the following parts.

①: Spring
②: Pin
③: Spacer
④: Valve guide
⑤: No. 1 valve
⑥: No. 2 valve

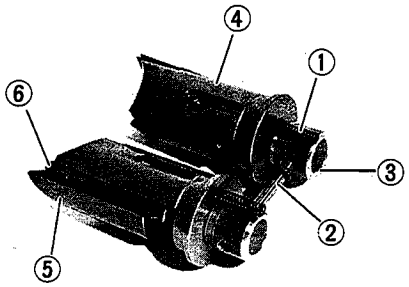

REASSEMBLY

*Apply SUZUKI THREAD LOCK SUPPER "1322"

Tightening torque		
N·m	kg-m	lb-ft
8 – 12	0.8 – 1.2	6.0 – 9.0

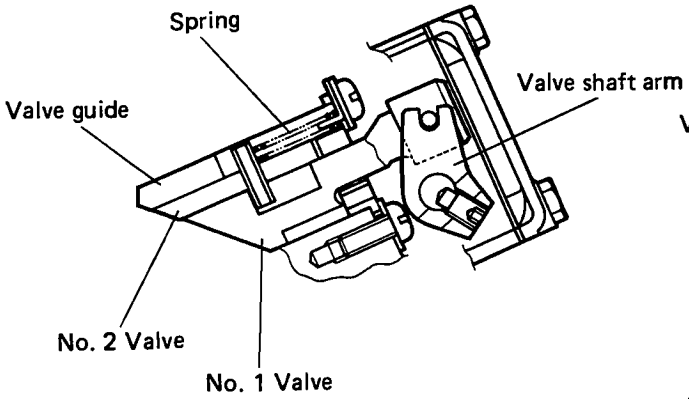

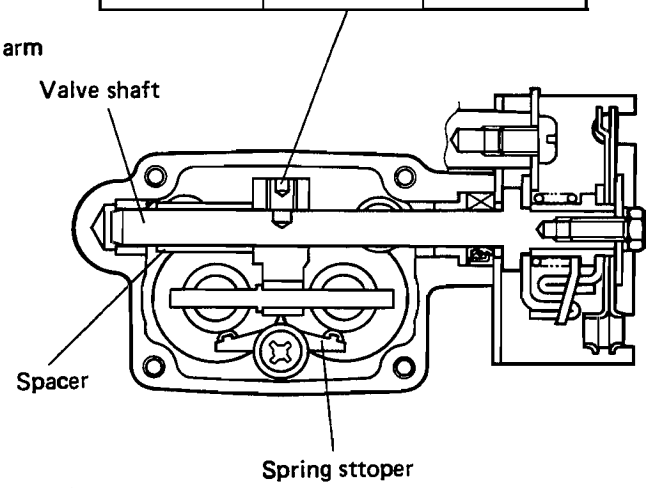

- Apply THREAD LOCK SUPER "1322" to the lock bolt and tighten it.

99000-32110: THREAD LOCK SUPER "1322"

Tightening torque: 8 – 12 N·m (0.8 – 1.2 kg-m)

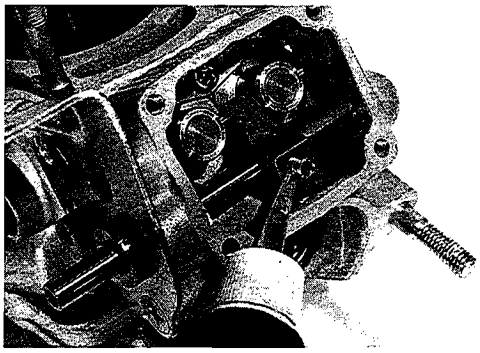

- Set the exhaust valve lever Ⓐ onto the exhaust valve shaft Ⓑ.

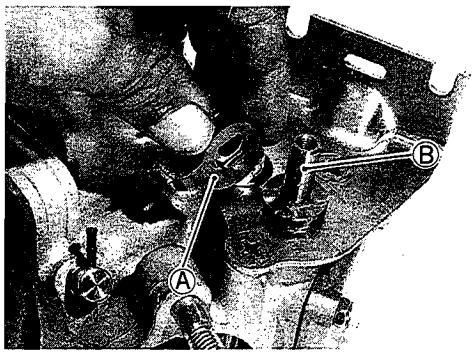

Downloaded from www.Manualslib.com manuals search engine

- Apply THREAD LOCK SUPER "1322" to the exhaust valve lever set screw.

99000-32110: THREAD LOCK SUPER "1322"

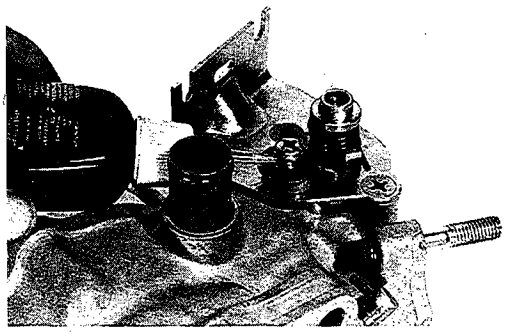

EXHAUST VALVE CABLE

LOCATION OF ADJUSTERS

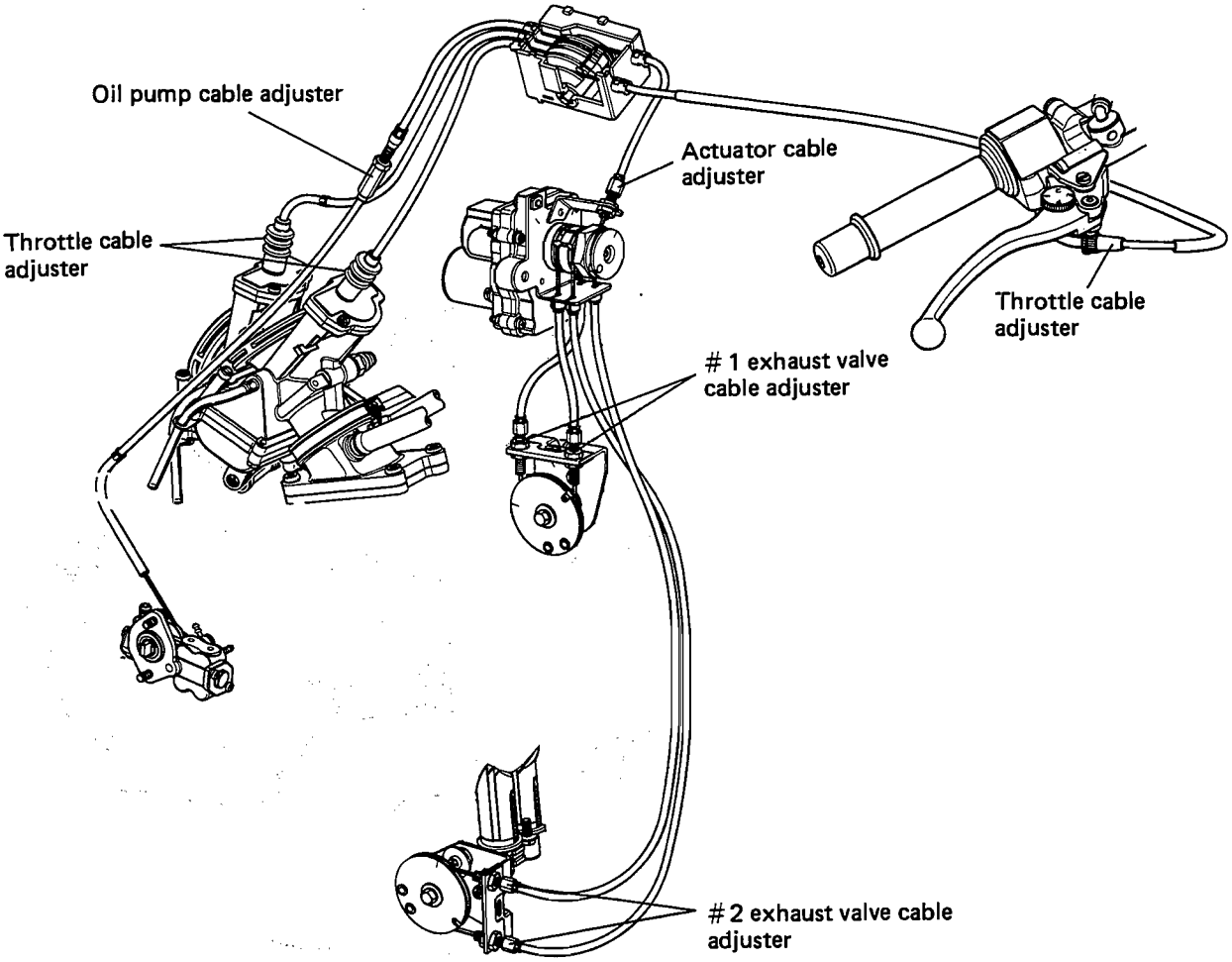

Downloaded from www.Manualslib.com manuals search engine

EXHAUST VALVE CABLE PULLEY

INSPECTION

- Turn "ON" the ignition switch.
- Engine kill switch is "RUN" position.

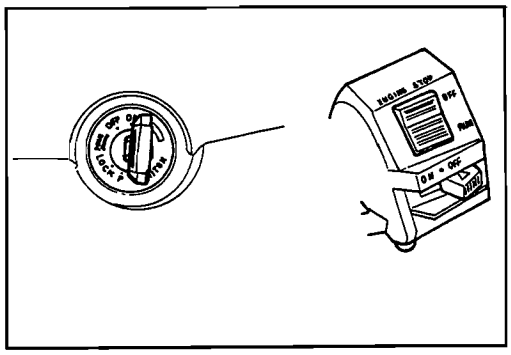

- Connect the free lead wire ① (Gray) under the fuel tank bracket to the battery ⊖ terminal.
  * Actuator slightly moves.

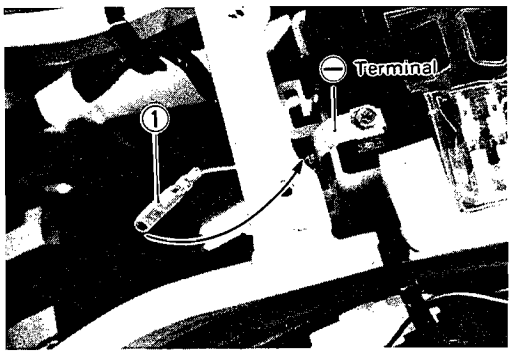

- On this condition, turn "OFF" the ignition switch.
- Disconnect the lead wire from the battery ⊖ terminal.
  * Actuator does not move.

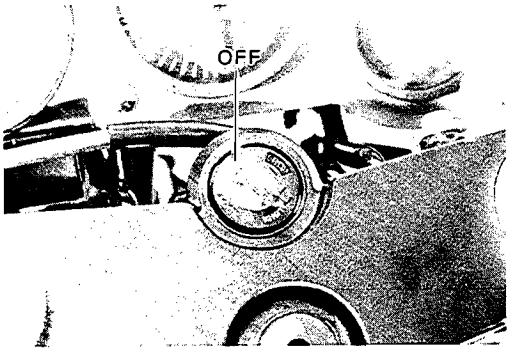

- Check that the index line Ⓐ on the # 1 exhaust valve pulley is pointing to the line Ⓑ on the oil seal retainer.

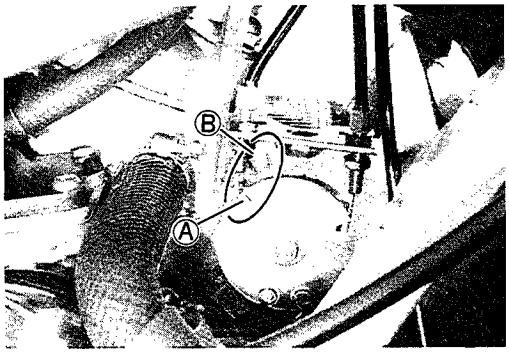

- Check that the index line Ⓒ on the # 2 exhaust valve pulley is pointing to the line Ⓓ on the oil seal retainer.

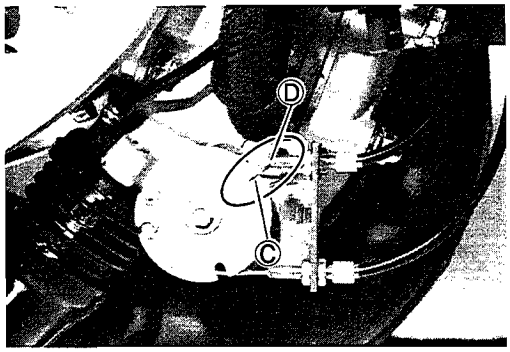

Downloaded from www.Manualslib.com manuals search engine

EXHAUST VALVE CABLE ADJUSTMENT

- Loosen the lock nuts and turn the exhaust valve cable adjusters, ① and ②, until the index line Ⓐ on the exhaust valve pulley aligns with the index line Ⓑ on the oil seal retainer.

(For Left cylinder exhaust valve cable)

- Give the cable slack ③ as measured by deflection when the inner cable is lightly pushed sideways by finger.

(For Right cylinder exhaust valve cable)

- Give the cable play ④ when the outer cable is lightly pulled by finger.
- Tighten the lock nuts.

Cable slack ③: Approx. 3.5 mm
Cable play ④: 0.8 – 1.2 mm

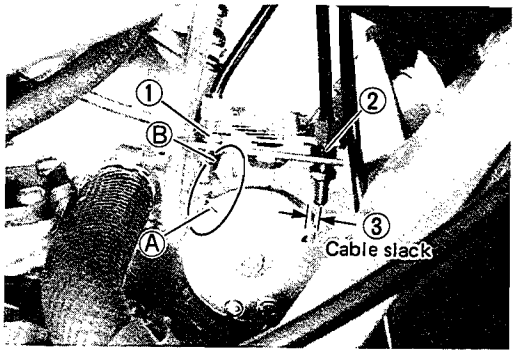

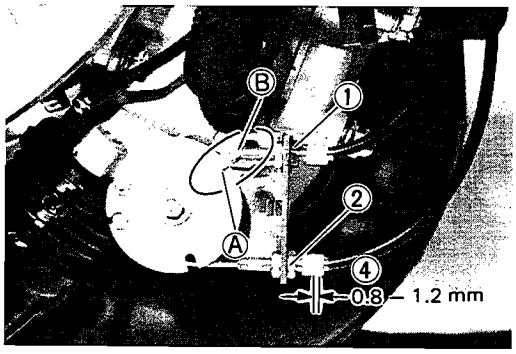

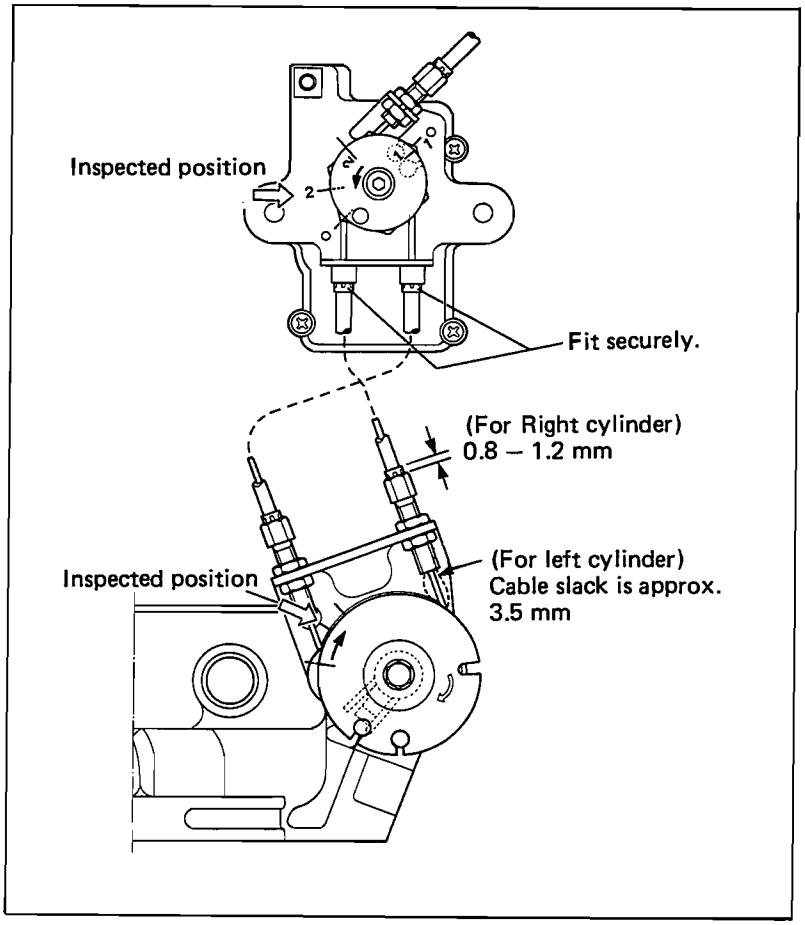

- Check that the index line-2 Ⓐ on the actuator pulley is pointing to the index line-2 Ⓑ on its holder.
  * If incorrect, inspect the actuator individually.

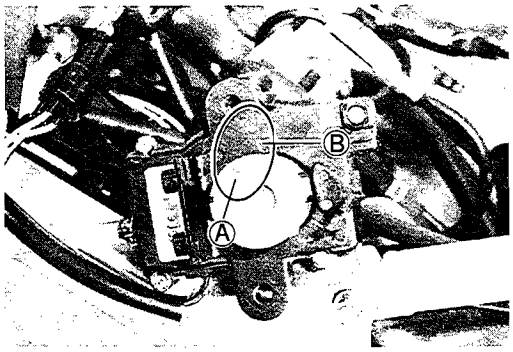

Downloaded from www.Manualslib.com manuals search engine

ACTUATOR
REASSEMBLY

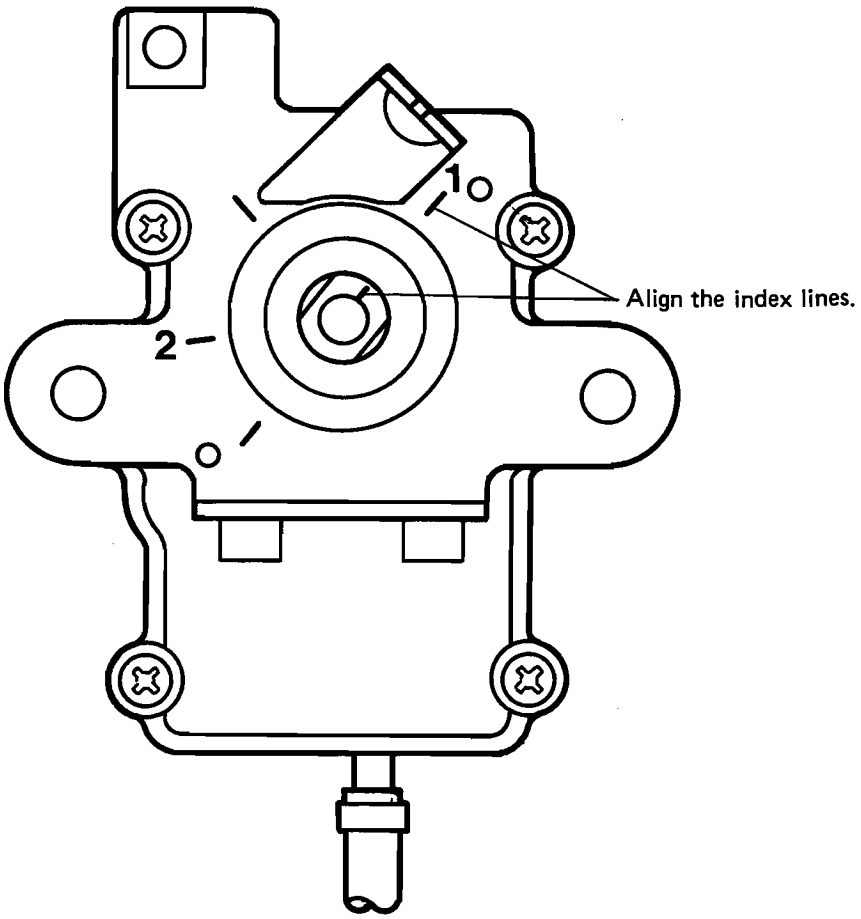

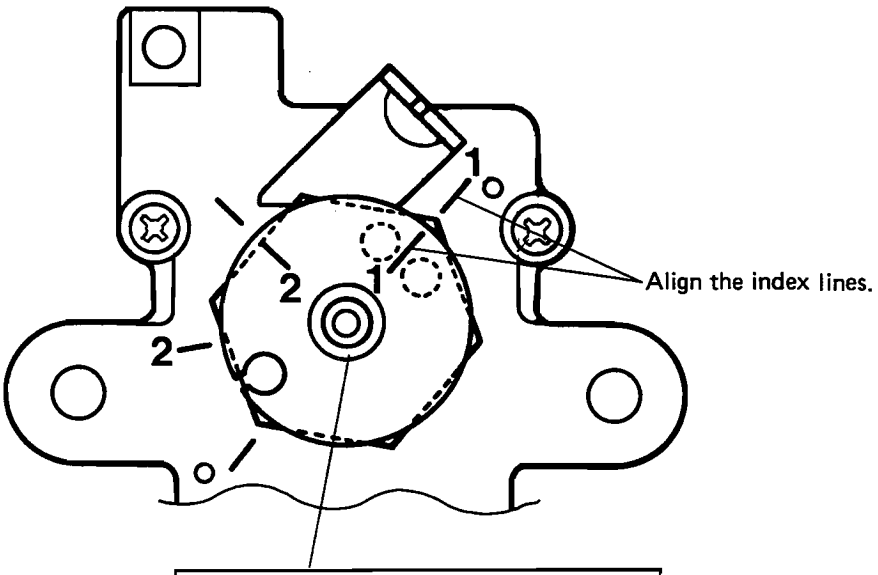

Tightening torque		
N·m	kg-m	lb-ft
4 – 6	0.4 – 0.6	3.0 – 4.5

*Apply SUZUKI THREAD LOCK SUPPER"1322"

Downloaded from www.Manualslib.com manuals search engine

ADJUSTMENT OF CARBURETOR IDLE ANGLE

(Carburetor synchronization)

- Remove the seat and the fuel tank.
- Remove the air cleaner box ①.
- Remove the throttle cables in the junction box ②.

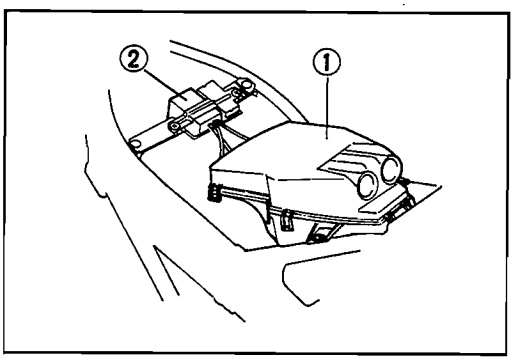

- Remove the carburetors.
- Loosen the lock nut and turn in the cable adjuster ③.
- Turn back the throttle stop screw ④ to lower the throttle valve ⑤ to the full close position.

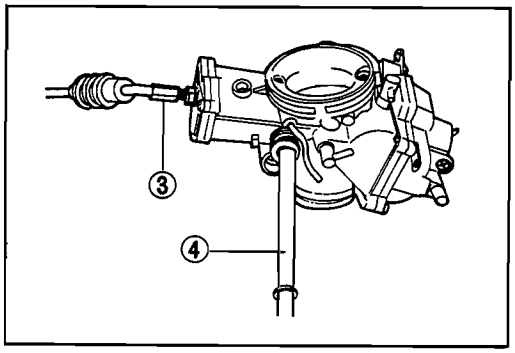

- Adjust the throttle valve idle position by turning the throttle stop screw so that the minimum clearance between the throttle valve ⑤ and the bore comes to the specification. Use a piece of 0.7 mm wire ⑥ or a drill bit for checking the clearance.

Throttle valve clearance: 0.7 mm

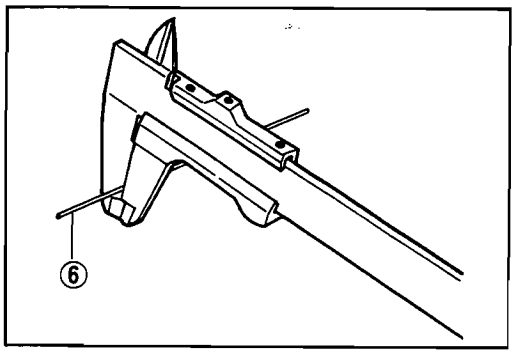

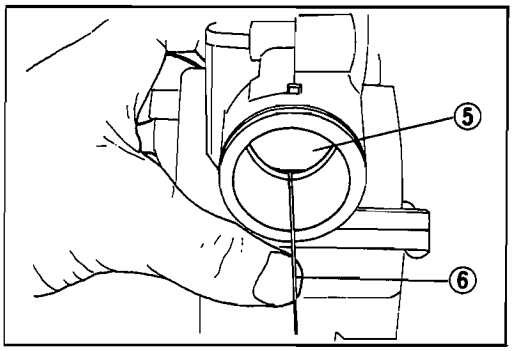

- Install each carburetor to the engine.
- Adjust the cable slack of right and left carburetors by turning each cable adjuster ③ to 0.5 – 1.0 mm.

Cable slack: 0.5 – 1.0 mm

- Tighten each lock nut ⑦.

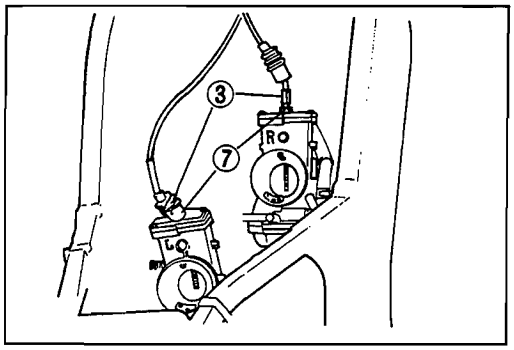

Downloaded from www.Manualslib.com manuals search engine

TRANSMISSION

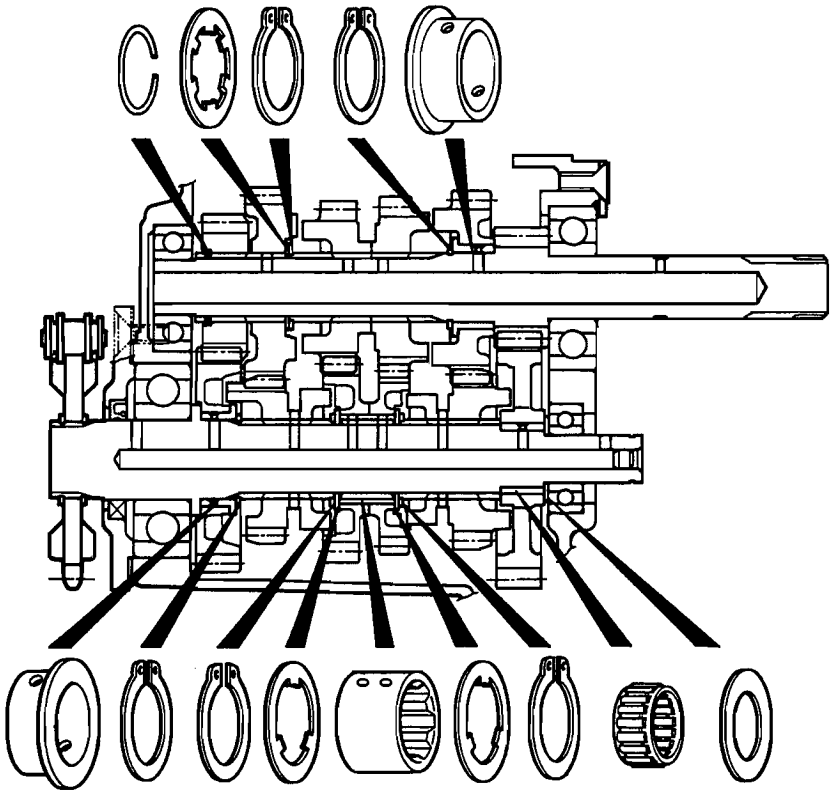

DRIVESHAFT

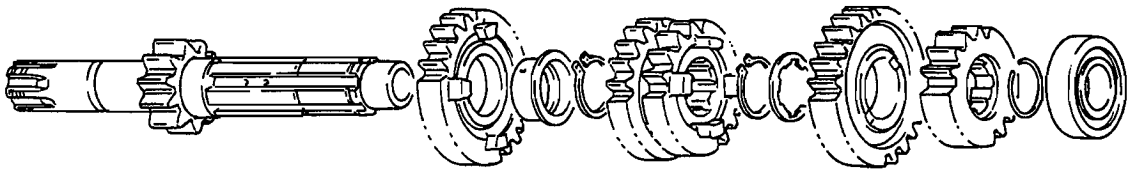

COUNTERSHAFT

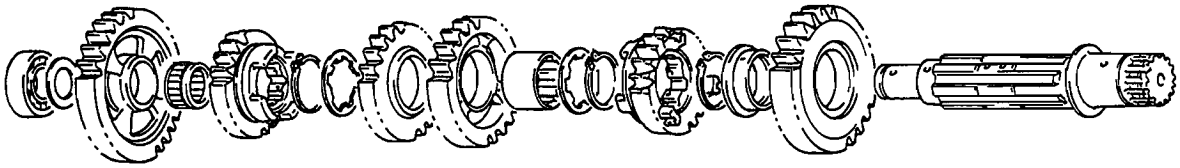

Downloaded from www.Manualslib.com manuals search engine

FRONT FORK

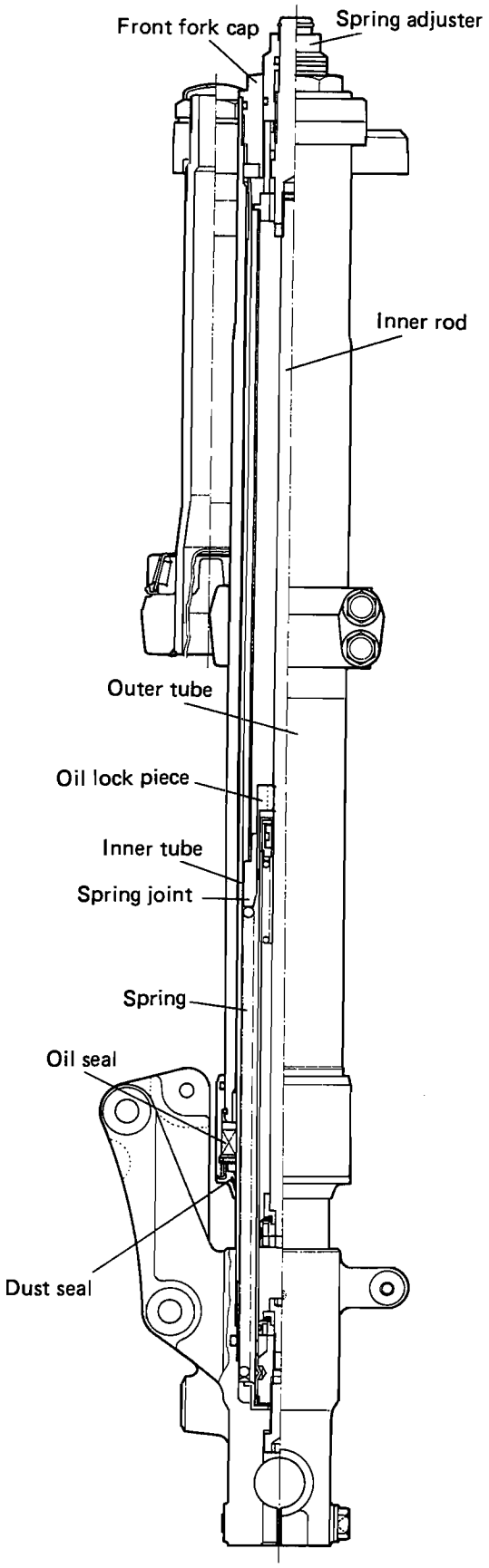

Downloaded from www.Manualslib.com manuals search engine

DISASSEMBLY

NOTE:
Slightly loosen the front fork cap to facilitate later disassembly before loosening the front fork clamp bolts.

- Remove the stopper ring ① and spring adjuster ②.

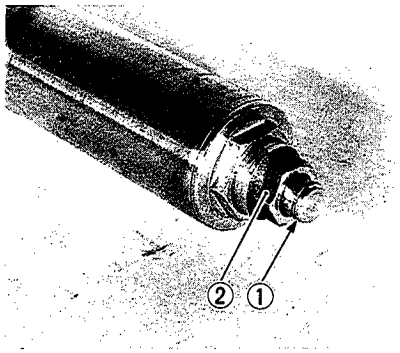

- Remove the spring adjuster pin assembly ③.

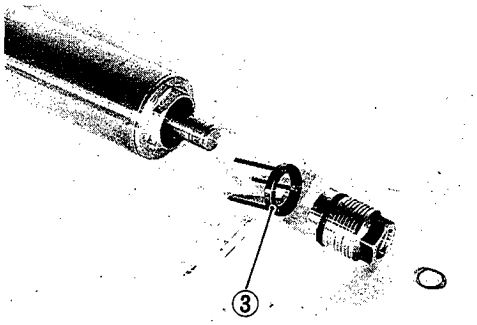

- Loosen the front fork cap ④.

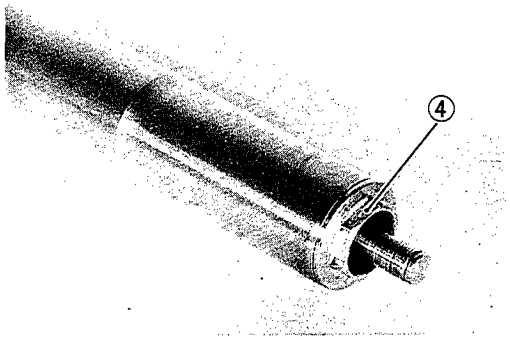

- Remove the front fork cap stopper screw ⑤.

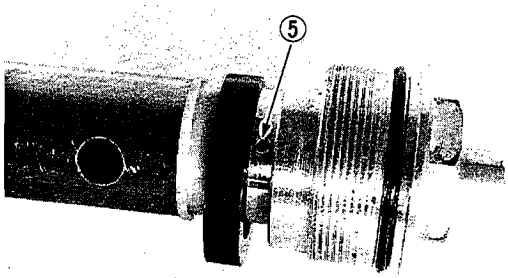

- Compress the fork spring and install the stopper plate (special tool Ⓐ) between the lock nut and spacer.
- Remove the front fork cap ④.

09940-94920: Stopper plate

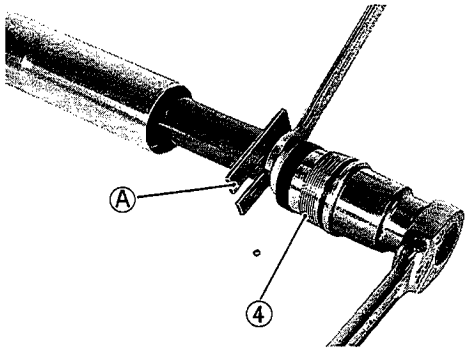

Downloaded from www.Manualslib.com manuals search engine

- Remove the spacer ⑥ and spring ⑦.

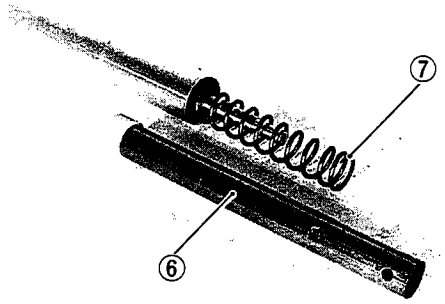

- Invert the fork and stroke the inner rod several times to let out fork oil.
- Under the inverted condition of front fork, drain oil to hold it for minutes.

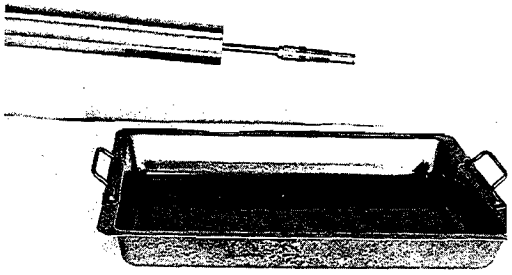

- Remove the damper rod bolt with the hexagon wrench.

09900-00401: "L" type hexagon wrench set

- Remove the inner rod/damper rod (cartridge) out of the inner tube.

CAUTION:
Do not attempt to disassemble the inner rod/damper rod.

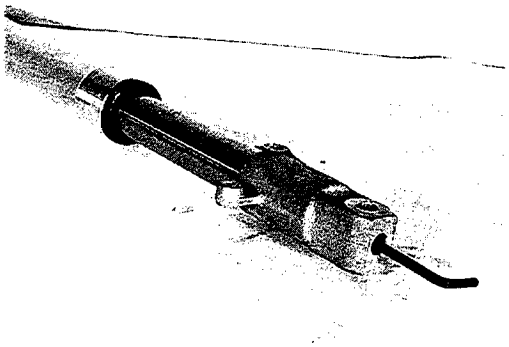

- Mark a lock position on the spring adjuster guide rod for reference used when reassembly.

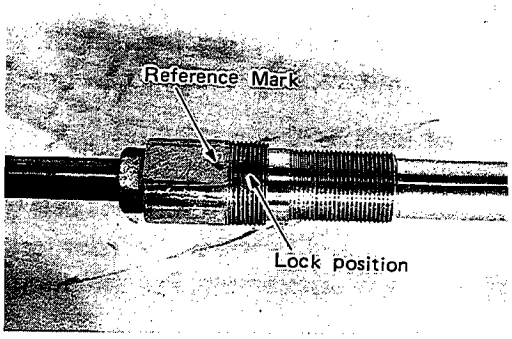

- Remove the dust seal ⑧ and oil seal stopper ring ⑨.

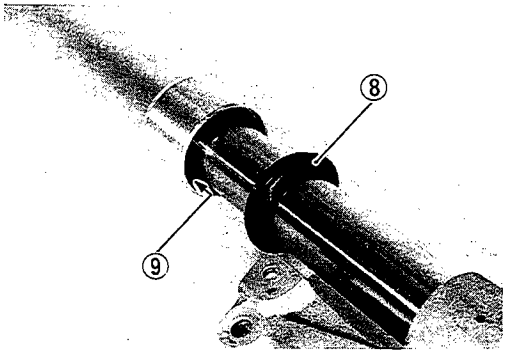

Downloaded from www.Manualslib.com manuals search engine

- Separate the outer tube from the inner tube.

NOTE:
Be careful not to damage the inner tube.

CAUTION:
The outer tube and inner tube "ANTI-FRICTION" metals must be replaced along with the oil seal and dust seal, when assembling the front fork.

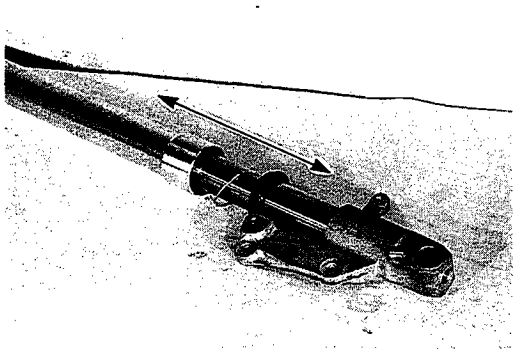

- Remove the oil seal housing stopper ring ⑩.
- Remove the oil seal housing from the outer tube.
- Remove the O-ring out of the oil seal housing.

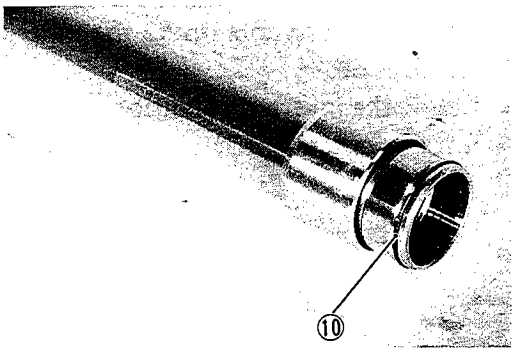

INSPECTION

Inner and outer tube

Inspect the inner tube sliding surface and outer tube sliding surface for any scuffing.

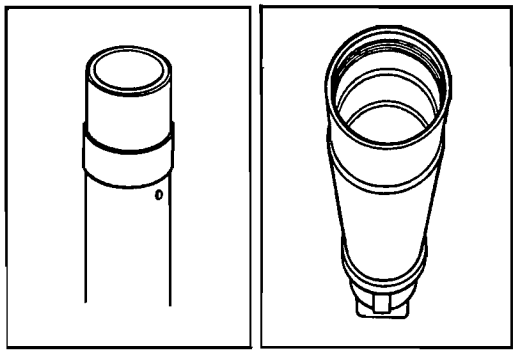

Fork spring

Measure the fork spring free length. If it is shorter than the service limit, replace it with a new one.

Service limit: 330 mm (13.0 in)

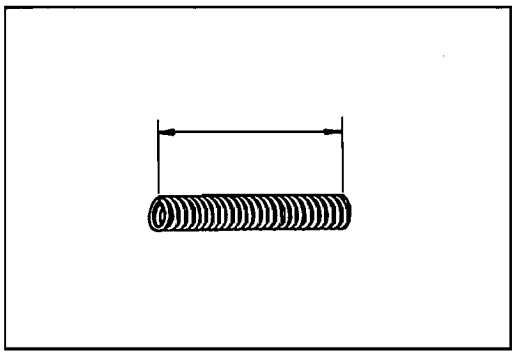

REASSEMBLY AND REMOUNTING

Reassemble and remount the front fork in the reverse order of removal and disassembly. Pay attention to the following points:

Damper rod bolt

Insert the inner rod/damper rod (cartridge) into the inner tube and tighten the damper rod bolt to the specified torque with the hexagon wrench.

CAUTION:
Use a new damper rod bolt gasket to prevent oil leakage.

Damper rod bolt: 30 – 40 N·m
(3.0 – 4.0 kg-m, 21.5 – 29.0 lb-ft)

09900-00401: "L" type hexagon wrench set

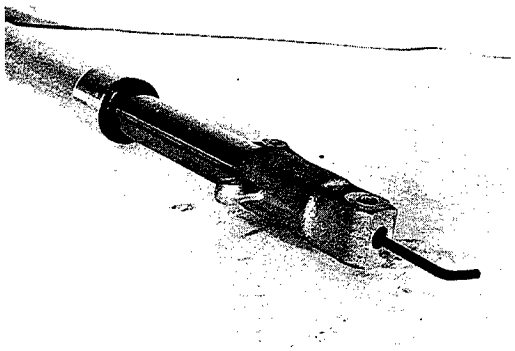

Downloaded from www.Manualslib.com manuals search engine

Tube metals and seals

- Hold the inner tube vertically and clean the metal groove and install the ANTI-FRICTION metal by hand as shown.

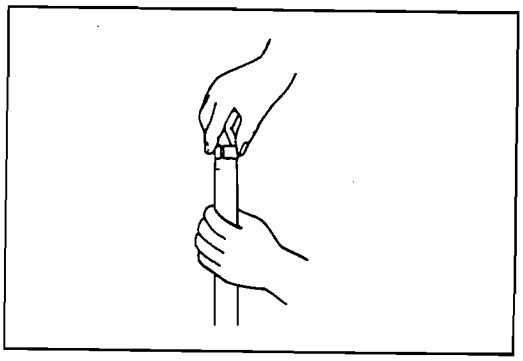

CAUTION:
Use special care to prevent damage to the "TEFLON" coated surface of the ANTI-FRICTION metal when mounting it.

- Install the dust seal, oil seal stopper ring, oil seal, oil seal retainer and anti-friction metal onto the inner tube.

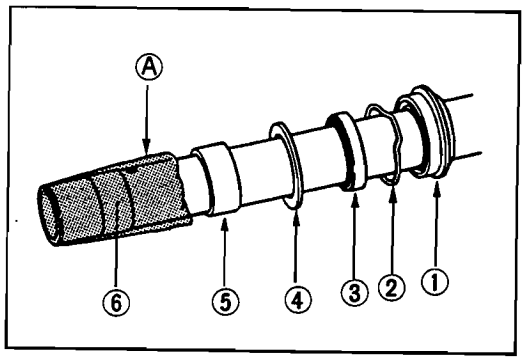

CAUTION:
* **When installing the dust seal ① and oil seal ③ onto the inner tube, protect their seal lips with a vinyl film Ⓐ to prevent oil seal damage.**
* **Do not use solvents for washing to prevent oil seal damage.**

① Dust seal
② Oil seal stopper ring
③ Oil seal
④ Oil seal retainer
⑤ Anti-friction metal (outer tube)
⑥ Anti-friction metal (inner tube)

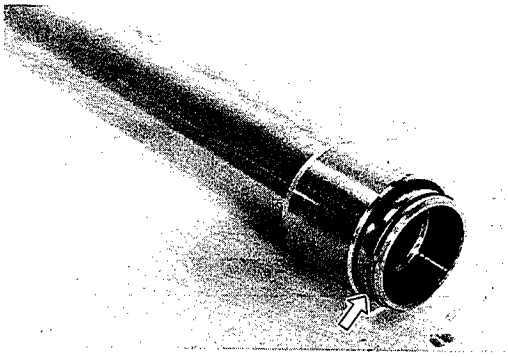

- Install the O-ring into the O-ring groove of the oil seal housing and apply grease to the O-ring.
- Install the oil seal housing onto the outer tube and install the oil seal housing stopper ring onto the outer tube.

- Insert the inner tube into the outer tube and install the oil seal and dust seal with the special tools, ① and ②.

09940-52820: Front fork oil seal installer
09940-52830: Oil seal housing stopper

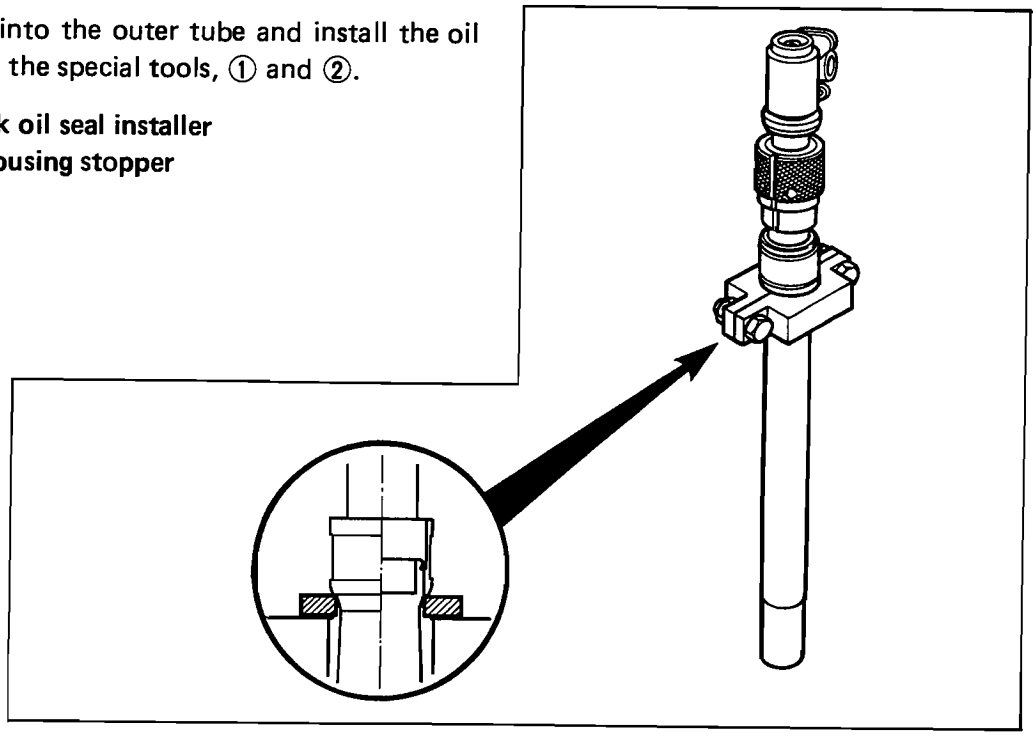

Downloaded from www.Manualslib.com manuals search engine

① Anti-friction metal
② Oil seal retainer
③ Oil seal
④ Oil seal stopper ring
⑤ Dust seal
⑥ O-ring
⑦ Oil seal housing stopper ring

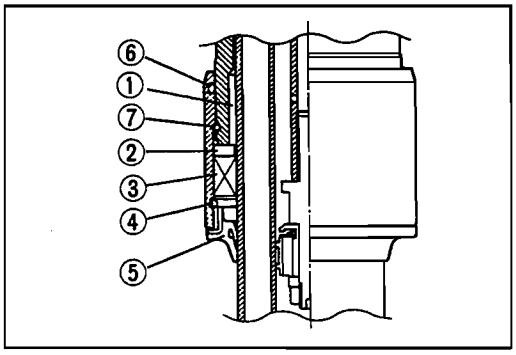

CAUTION:
Make sure that oil seal housing is surely stopped by its stopper ring.

Fork oil

- Place the front fork vertically with fully compressed and without spring.
- Pour specified front fork oil up to the top level of the outer tube.

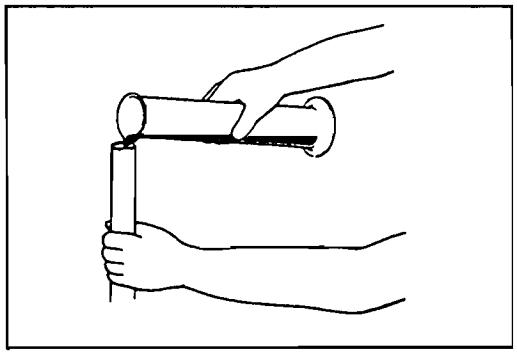

99000-99044-10G: Fork oil # 10

- Move the inner rod slowly with the special tool more than ten times until bubbles do not come out from oil.

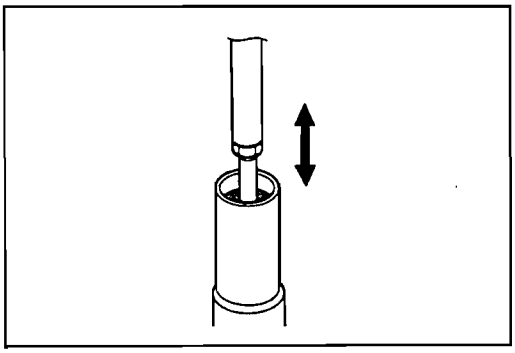

09940-52840: Front fork inner rod holder

NOTE:
Pour front fork oil up to the top of the outer tube to find bubbles while bleeding air.

- Pour specified front fork oil up to the top level of the outer tube again.
- Fully stroke the outer tube to pump out air from outer tube.
- Keep the front fork vertically and wait 5 – 6 minutes.

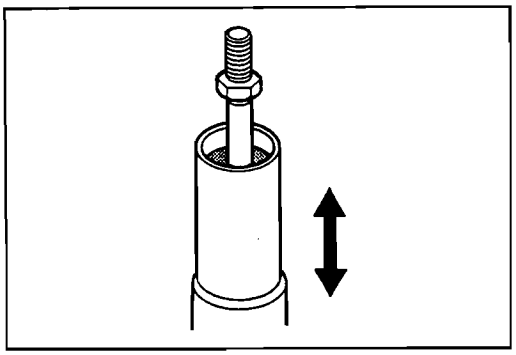

NOTE:
* *Always keep oil level over cartridge top surface, or air may enter cartridge when stroking.*
* *Take extreme attention to pump out air completely.*

- Hold the front fork vertical and adjust fork oil level with the special tool.

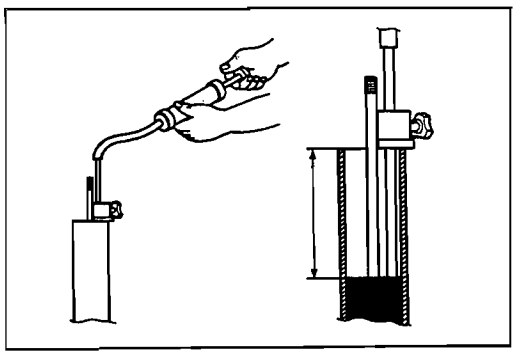

NOTE:
When adjusting fork oil level, remove the fork spring and compress the outer tube fully.

09943-74111: Fork oil level gauge

Fork oil level: 109 mm (4.29 in)
Fork oil capacity: 429 ml (14.5/15.1 US/Imp oz)
(each leg)

Downloaded from www.Manualslib.com manuals search engine

Front fork cap

- Screw the lock nut by hand until it stops by finger tight.

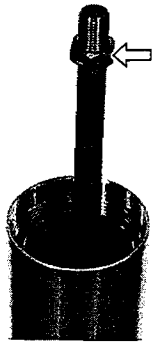

- Slowly turn in the spring adjuster guide rod by hand until it stops by finger tight and tighten the lock nut to the specified torque.

Tightening torque: 13.5 – 16.5 N·m
(1.35 – 1.65 kg-m, 10.0 – 12.0 lb-ft)

- Align the mark on the spring adjuster guide rod with the hole on the front fork cap. (Refer to page 10-24.)
- Tighten the front fork cap stopper screw.

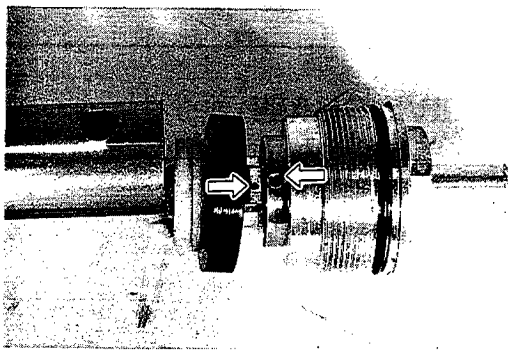

- Install the spring adjuster pin assembly ①, spring adjuster ② and stopper ring ③.

NOTE:
When installing the spring adjuster pin assembly ①, align the three pins with the holes of the front fork cap.

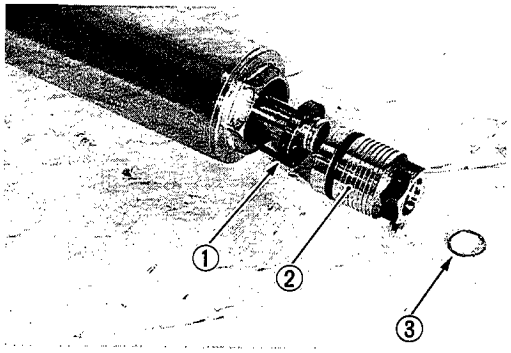

FRONT FORK REMOUNTING

- When remounting the front fork assembly, set the upper surface of the outer tube to the steering stem upper bracket.
- Tighten the front fork cap to the specified torque.

Tightening torque: 30 – 40 N·m
(3.0 – 4.0 kg-m, 21.5 – 29.0 lb-ft)

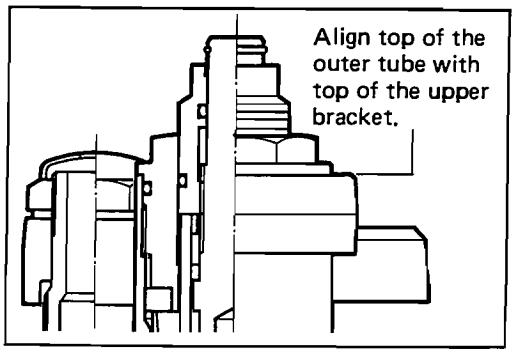

Downloaded from www.Manualslib.com manuals search engine

REAR BRAKE

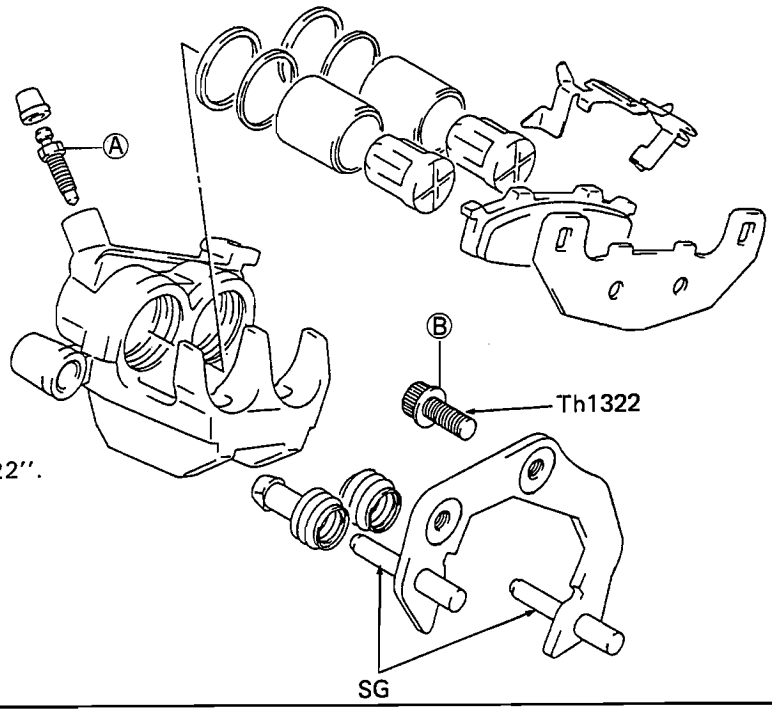

SG: Apply SILICONE GREASE.
Th1322: Apply THREAD LOCK SUPER "1322".

Tightening torque		
Item	N·m	Kg-m
Ⓐ	6–9	0.6–0.9
Ⓑ	20–31	2.0–3.1

DRIVE CHAIN

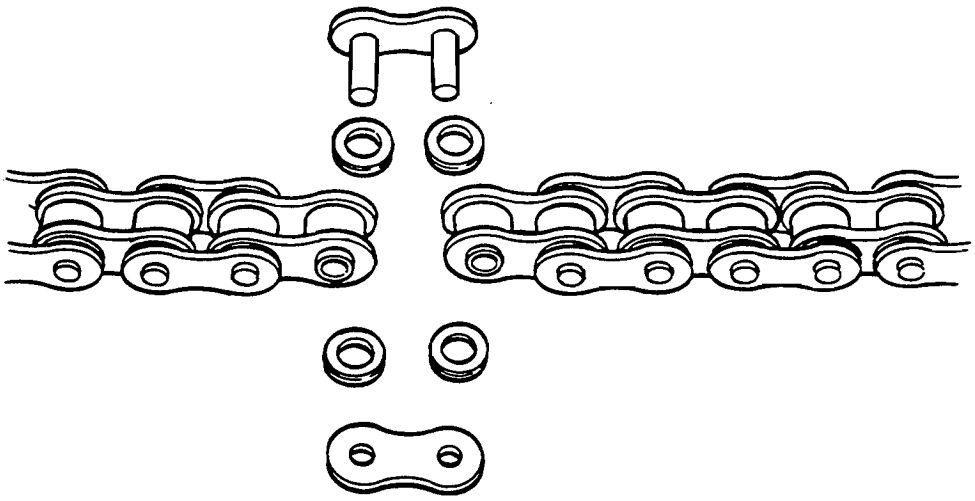

To cut and rejoin the drive chain, use the special tool in the following procedures.

09922-22710: Drive chain cutting and joining tool set

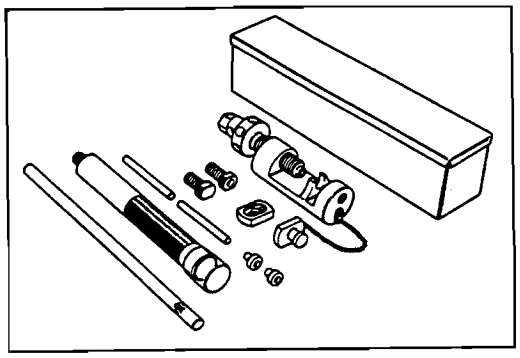

Downloaded from www.Manualslib.com manuals search engine

REMOVING JOINT PIN

- Set up the special tool as shown in the illustration.

  ① Tool body
  ② Grip handle
  ③ Pressure bolt A
  ④ Pressure bolt B
  ⑤ Bar
  ⑥ Adjuster bolt (with through hole)
  ⑦ Pin remover

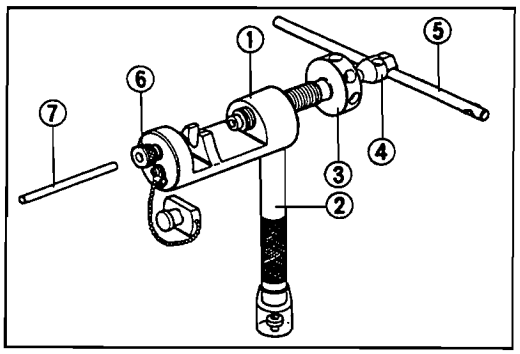

NOTE:
The tip of pin remover ⑦ should be positioned inside approximatery 5 mm (0.2 in) from the end face of pressure bolt A ③ as shown in the illustration.

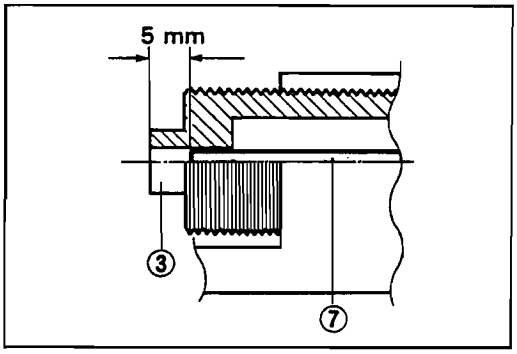

- Place the drive chain link being disjoined on the holder part ⑧ of the tool.
- Turn in both the adjuster bolt ⑥ and pressure bolt A ③ so that each of their end hole fits over the chain joint pin properly.
- Tighten the pressure bolt A ③ with the bar.

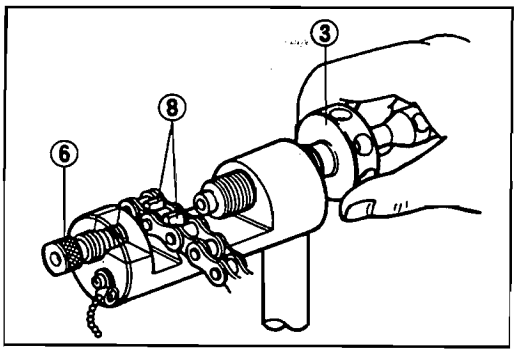

- Turn in the pressure bolt B ④ with the bar ⑤ and force out the drive chain joint pin ⑨.

CAUTION:
Continue turning in the pressure bolt B ④ until the joint pin has been completely pushed out of the chain.

NOTE:
After the joint pin ⑨ is removed, loosen the pressure bolt B ④ and then pressure bolt A ③.

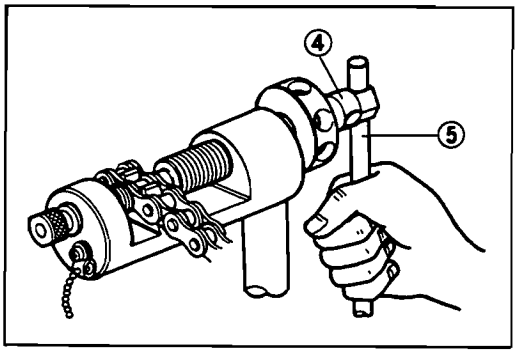

- Remove the joint pin of the other side of joint plate.

CAUTION:
Never reuse joint pins, O-rings and plates. After joint pins, O-rings and plates have been removed from the drive chain, the removed joint pins, O-rings and plates should be discarded and new joint plate, O-rings and plate must be installed.

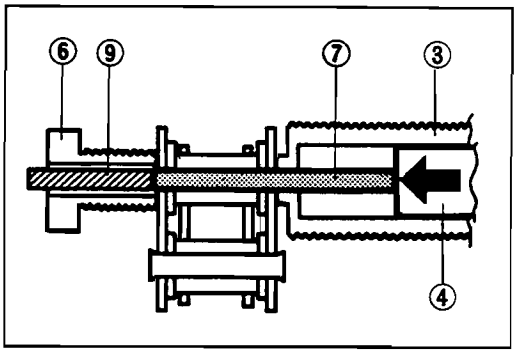

Downloaded from www.Manualslib.com manuals search engine

INSTALLING JOINT PLATE AND STAKING JOINT PIN

Installing joint plate

- Set up the special tool as shown in the illustration.

① Tool body
② Grip handle
③ Joint plate holder (engraved mark "F520")
④ Wedge holder & wedge pin
⑤ Adjuster bolt (without hole)
⑥ Pressure bolt A
⑦ Bar

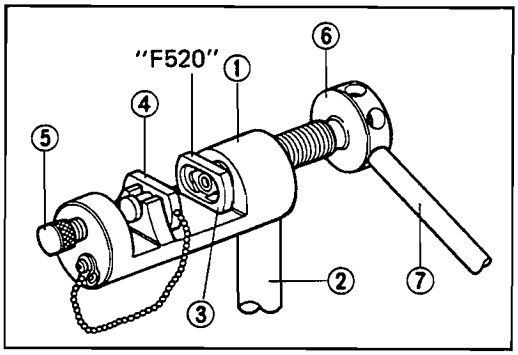

- Connect both ends of the drive chain with the joint pin ⑧ inserted from the wheel side as installed on the motorcycle.

⑨ O-ring . . . . . 4 pcs
⑩ Joint plate

Joint set part number
DID: 27620-22D10
RK: 27620-06C20

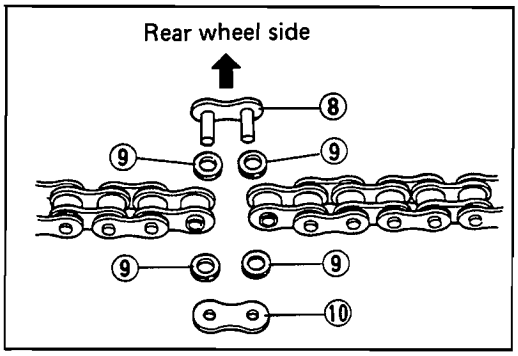

- Apply grease on the recessed portion of the joint plate holder ③ and set the joint plate ⑩.

NOTE:
When positioning the joint plate ⑩ on the tool, bring its stamp mark on the joint plate holder ③ side.

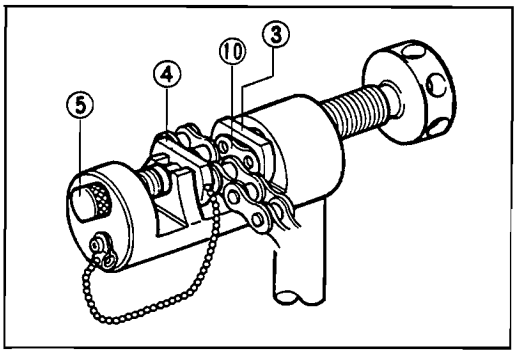

- Set the drive chain on the tool as illustrated and turn in the adjuster bolt ⑤ to secure the wedge holder & wedge pin ④.
- Turn in the pressure bolt A ⑥ and align two joint pins ⑪ properly with the respective holes in joint plate ⑩.
- Turn in the pressure bolt A ⑥ further using the bar ⑦ to press the joint plate over the joint pins.

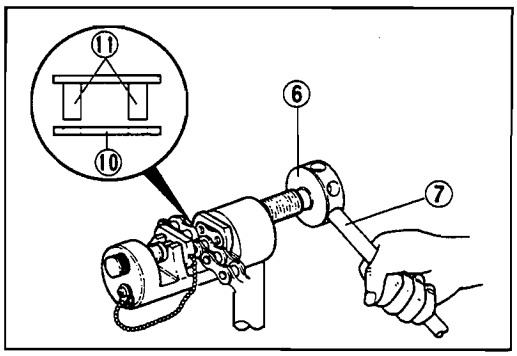

- Continue pressing the joint plate until the distance between the two joint plates comes to the specification.

Joint plates distance specification Ⓦ

DID	17.1 – 17.3 mm (0.67 – 0.68 in)
RK	17.25 – 17.55 mm (0.679 – 0.691 in)

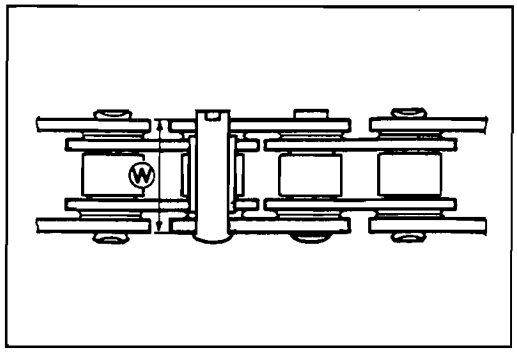

CAUTION:
Should pressing of the joint plate be made excessively beyond the specified dimension, the work should be redone using the new joint parts.

Downloaded from www.Manualslib.com manuals search engine

Staking joint pin

- Set up the special tool as shown in the illustration.

  ① Tool body
  ② Grip handle
  ③ Pressure bolt A
  ④ Adjuster bolt (without hole)
  ⑤ Staking pin (stowed inside grip handle behind rubber cap)
  ⑥ Bar

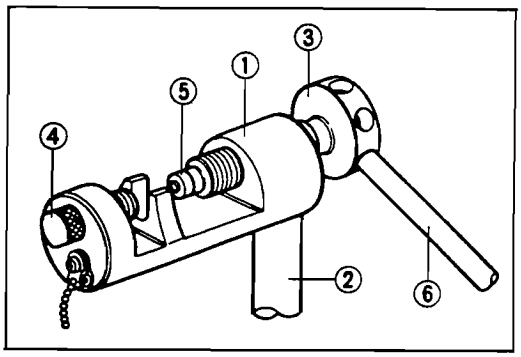

- Stake the joint pin by turning (approximately 7/8 turn) the pressure bolt A ③ with the bar until the pin end diameter becomes the specified dimension.

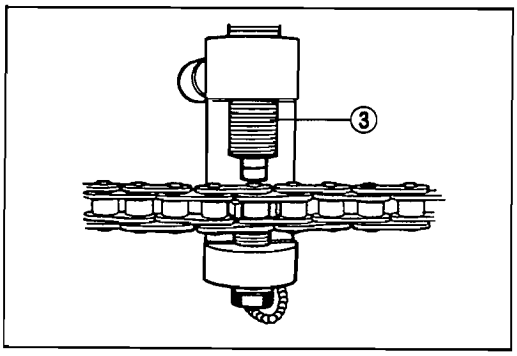

Pin end diameter specification Ⓓ

DID	5.3 – 5.6 mm (0.20 – 0.22 in)
RK	5.4 – 5.8 mm (0.21 – 0.23 in)

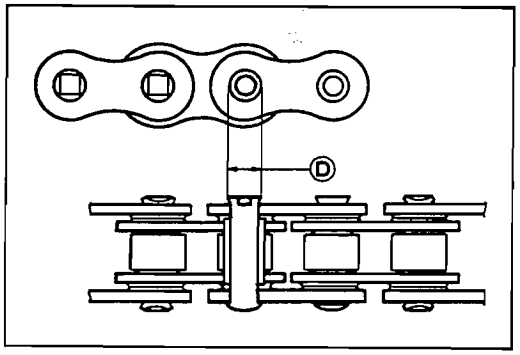

CAUTION:

* **After joining of the chain has been completed, check to make sure that the link is smooth and no abnormal condition is found.**
* **Should any abnormal condition be found, reassemble the chain link using the new joint parts.**

Downloaded from www.Manualslib.com manuals search engine

REAR SUSPENSION

SWINGARM

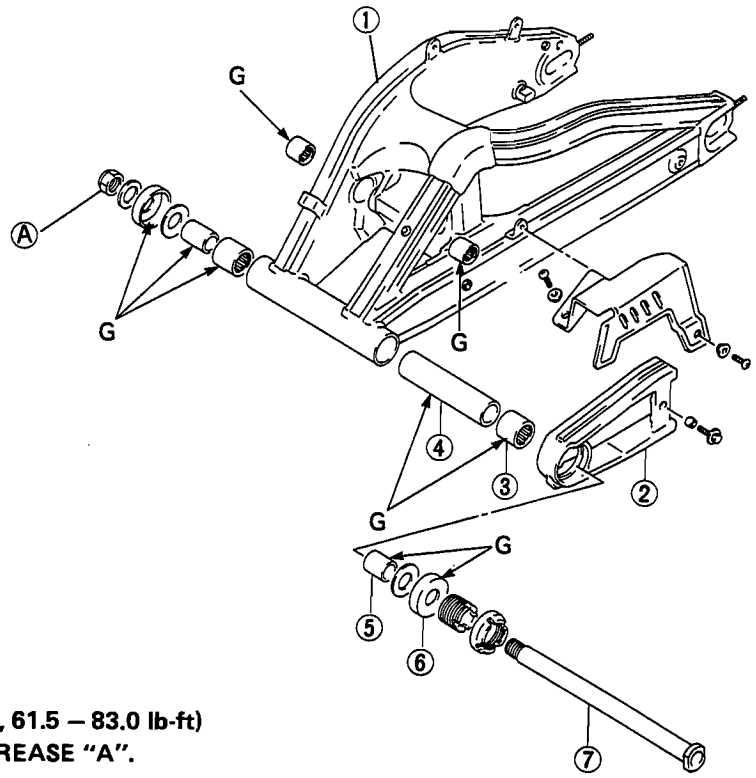

Tightening torque
Ⓐ: 85 – 115 N·m
(8.5 – 11.5 kg-m, 61.5 – 83.0 lb-ft)
G : Apply SUPER GREASE "A".

① Swingarm
② Chain buffer
③ Bearing
④ Spacer
⑤ Spacer
⑥ Dust seal
⑦ Pivot shaft
⑧ Pivot thrust adjuster
⑨ Pivot thrust adjuster lock nut

SHOCK ABSORBER AND CUSHION LEVER

Tightening torque
Ⓐ, Ⓑ: 48 – 72 N·m
(4.8 – 7.2 kg-m, 35.0 – 52.0 lb-ft)
Ⓒ, Ⓓ, Ⓔ: 84 – 120 N·m
(8.4 – 12.0 kg-m, 61.0 – 87.0 lb-ft)

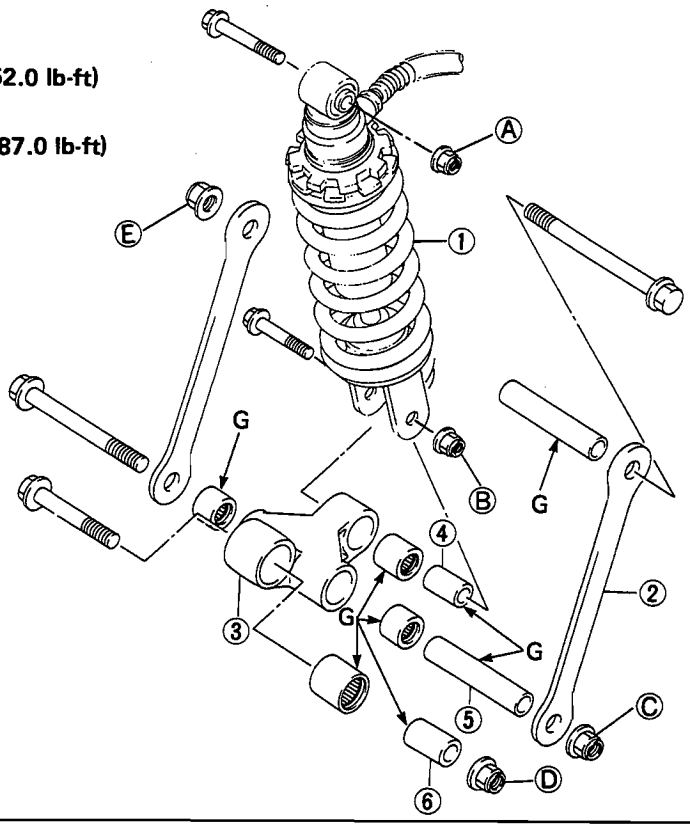

① Shock absorber
② Cushion lever rod
③ Cushion lever
④ Spacer
⑤ Spacer
⑥ Spacer

G : Apply SUPER GREASE "A".

Downloaded from www.Manualslib.com manuals search engine

REMOVAL

- Remove the rear wheel.
- Remove the brake caliper mounting bolts.
- Remove the rear fender①.

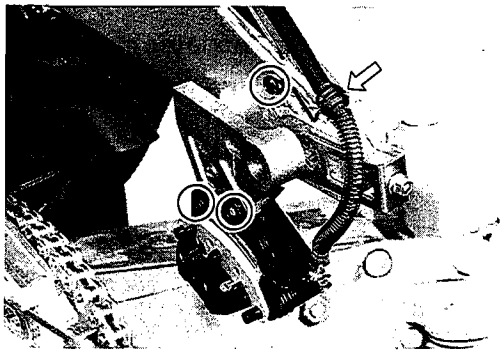

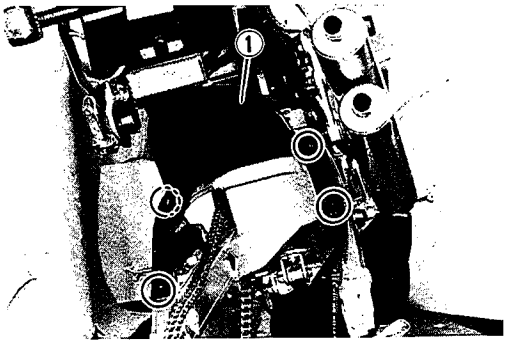

- Remove the shock absorber upper mounting bolt.

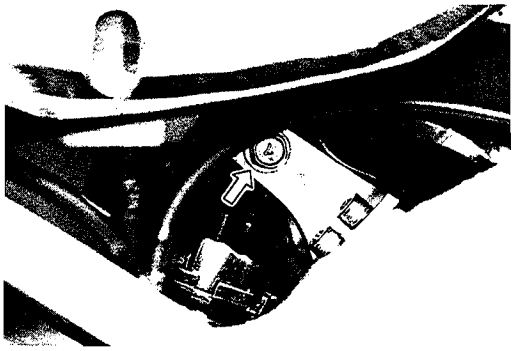

- Remove the shock absorber lower mounting bolt.
- Remove the shock absorber.

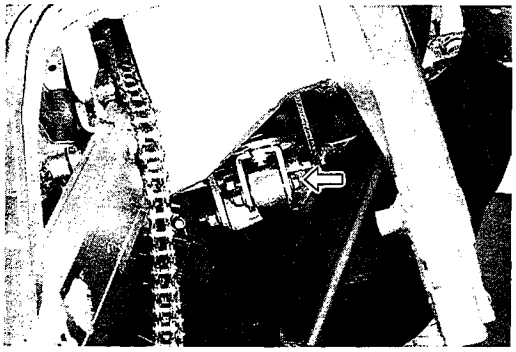

- Cut the drive chain with the special tool. (Refer to page 30.)

09922-22710: Drive chain cutting and joining tool set

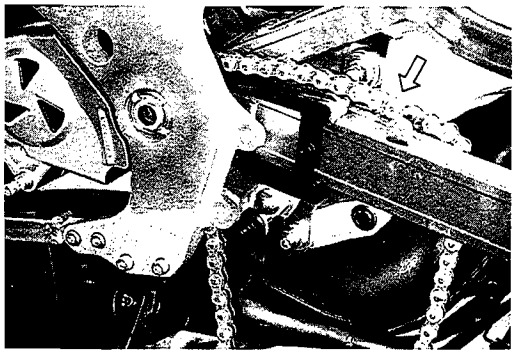

Downloaded from www.Manualslib.com manuals search engine

- Remove the cushion lever mounting bolt.

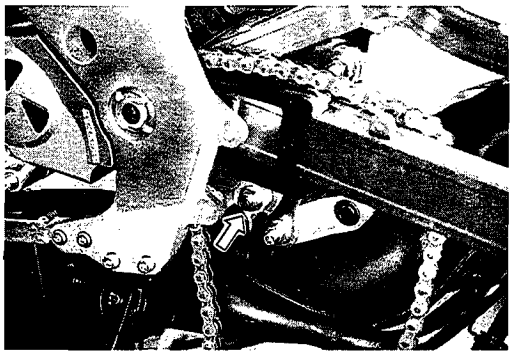

- Hold the swingarm pivot shaft with a 14-mm hexagon wrench and remove the swingarm pivot nut.

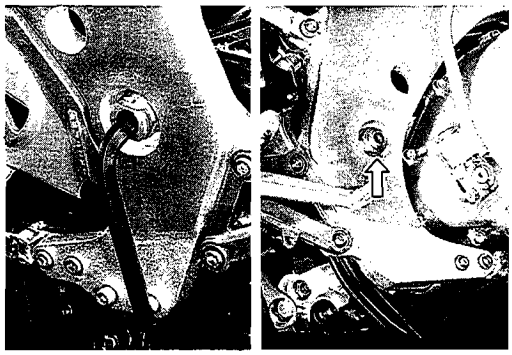

- Remove the pivot thrust adjuster lock nut①.

09940-14940: Pivot thrust adjuster lock nut wrench

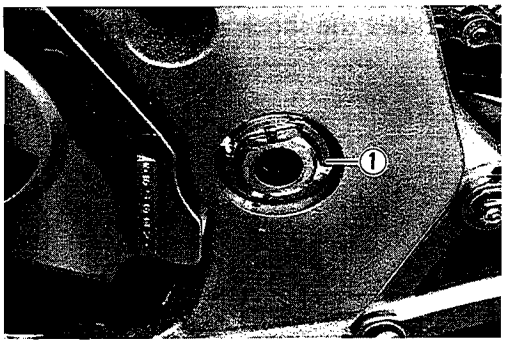

- Loosen the pivot thrust adjuster②,

09940-14950: Pivot thrust adjuster wrench

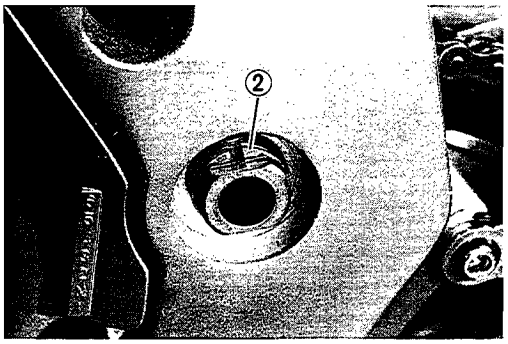

- Remove the swingarm pivot shaft.
- Remove the rear suspension.

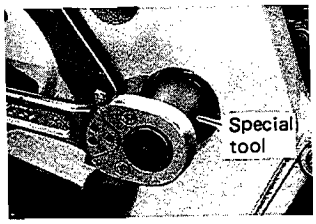

- Remove the chain buffer.
- Remove the dust seals and washers.
- Remove the cushion lever/rod bolts.

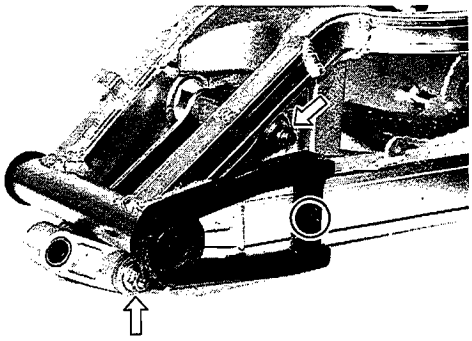

Downloaded from www.Manualslib.com manuals search engine

INSPECTION

Swingarm

Inspect the spacer for any flaws or other damage.
Insert the spacer into the bearing and check the play by moving the spacer up and down. If an excessive play is noted, replace the bearing with a new one.
Inspect each rubber part for wear and damage.

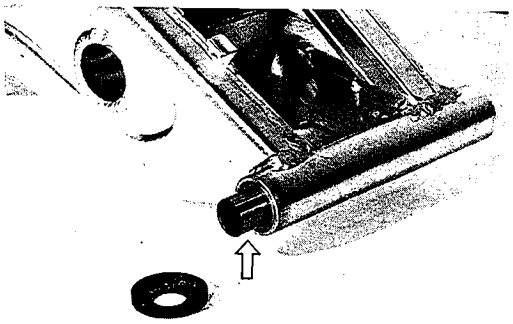

Cushion lever

Inspect the spacer for any flaws or other damage.
Insert the spacer into the bearing and check the play by moving the spacer up and down.
If an excessive play is noted, replace the bearing with a new one.

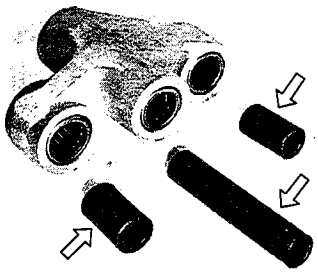

Cushion lever rod

Inspect the spacer for any flaws or other damage.
Insert the spacer into the bearing and check the play by moving the spacer up and down. If an excessive play is noted, replace the bearing with a new one.

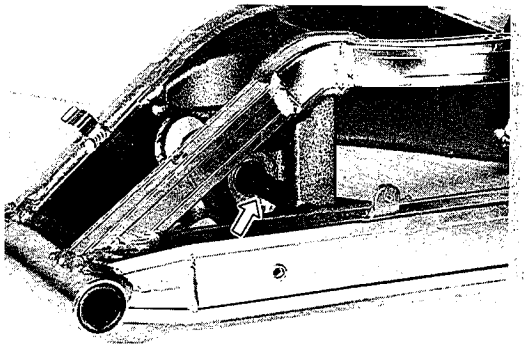

Shock absorber

Inspect the shock absorber body, bushing and bearing for damage and oil leakage. If any defects are found, replace the shock absorber with a new one.

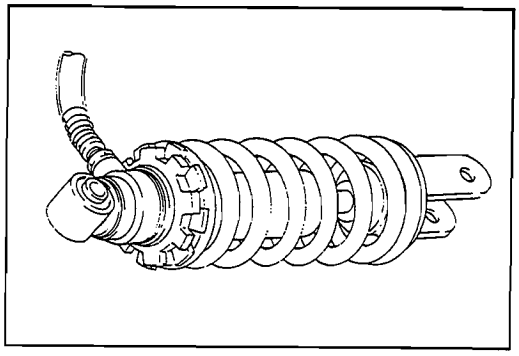

Swingarm pivot shaft

Using a dial gauge, check the pivot shaft runout and replace it if the runout exceeds the limit.

09900-20606: Dial gauge (1/100)
09900-20701: Magnetic stand
09900-21304: V-block set (100 mm)

Service limit: 0.3 mm (0.01 in)

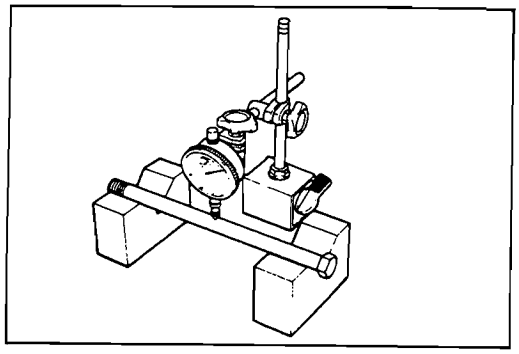

Downloaded from www.Manualslib.com manuals search engine

DISASSEMBLY

Swingarm

- Remove the spacers from the swingarm pivot.

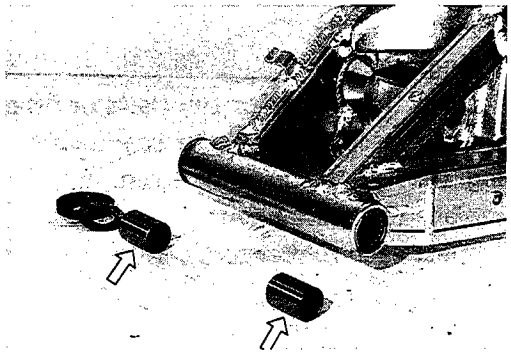

- Remove the swingarm bearings by using the special tool.

09941-44910: Swingarm bearing remover

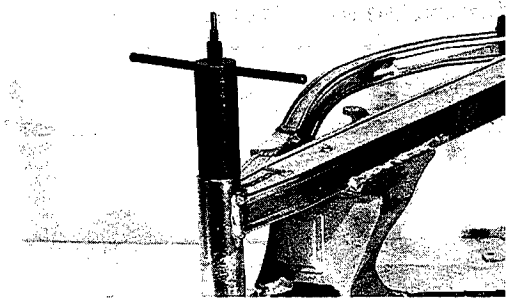

CAUTION:
The removed bearings should be replaced with new ones.

Cushion lever

- Remove the spacers.

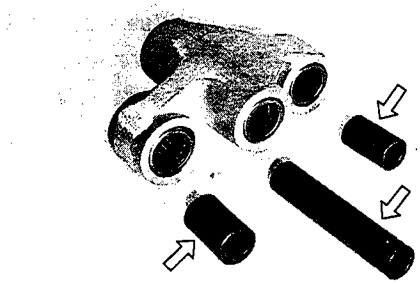

- Remove the bearings by using the special tool.

09923-73210: Bearing remover
09930-30102: Sliding shaft

CAUTION:
The removed bearings should be replaced with new ones.

Cushion lever rod

- Remove the spacer from the swingarm.

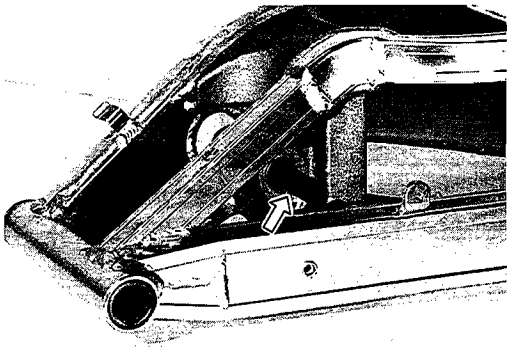

Downloaded from www.Manualslib.com manuals search engine

- Remove the bearing from the swingarm.

09923-73210: Bearing remover
09930-30102: Sliding shaft

CAUTION:
The removed bearings should be replaced with new ones.

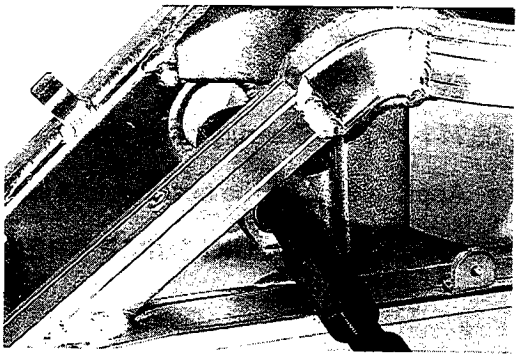

REASSEMBLY AND REMOUNTING

Reassemble and remount the swingarm, rear shock absorber, rear cushion lever rods and cushion lever. Pay attention to the following points:

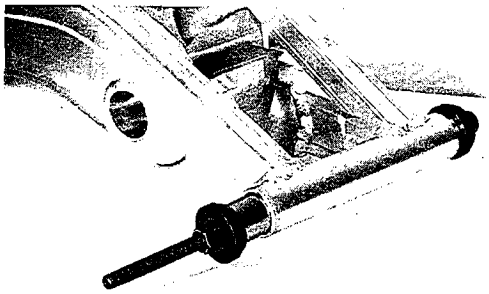

Swingarm

- Press-fit the bearings into the swingarm pivot.

09941-34513: Steering outer race installer

NOTE:
When installing the bearings, punch-marked side of bearing faces outside.

- Apply grease to the bearings, spacers and dust seals.

99000-25010: SUZUKI SUPER GREASE "A"

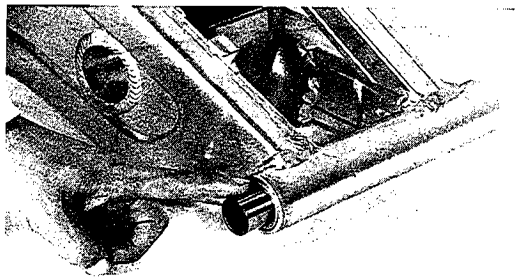

Cushion lever rod

- Press-fit the cushion lever rod bearings into the cushion lever rod pivot.

09941-34513: Steering outer race installer

- Apply grease to the bearings and spacer.

99000-25010: SUZUKI SUPER GREASE "A"

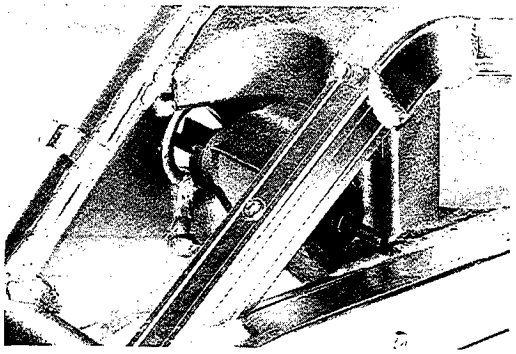

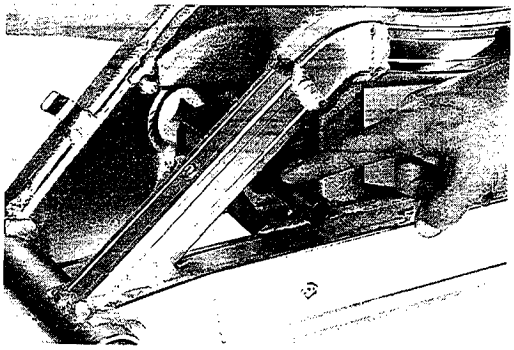

Downloaded from www.Manualslib.com manuals search engine

Cushion lever

- Press-fit the cushion lever bearing into the cushion lever.

09941-34513: Steering outer race installer

- Apply grease to the bearings and spacers.

99000-25010: SUZUKI SUPER GREASE "A"

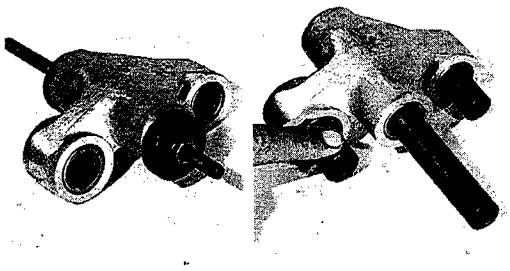

REASSEMBLY INFORMATION

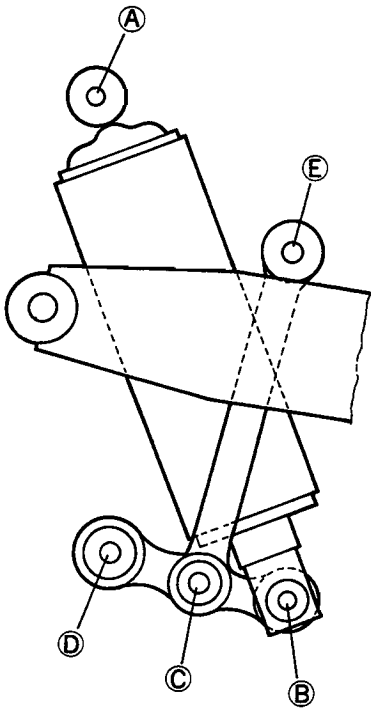

LEFT SIDE | RIGHT SIDE

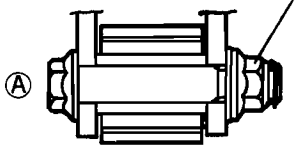

Tightening torque		
N·m	kg-m	lb-ft
48 – 72	4.8 – 7.2	35.0 – 52.0

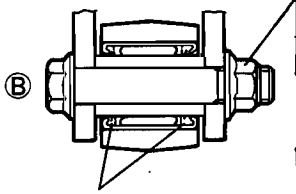

Tightening torque		
N·m	kg-m	lb-ft
48 – 72	4.8 – 7.2	35.0 – 52.0

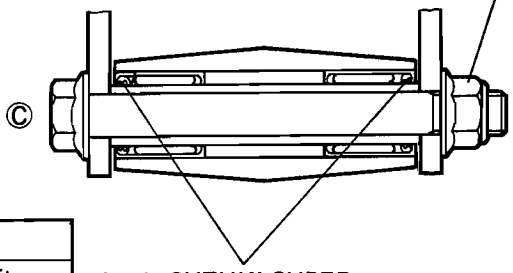

Tightening torque		
N·m	kg-m	lb-ft
84 – 120	8.4 – 12.0	61.0 – 87.0

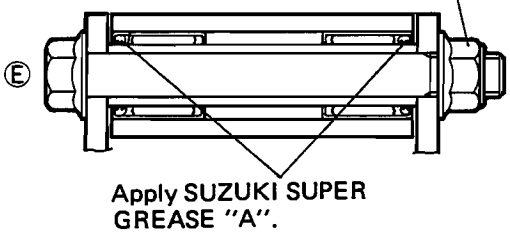

Tightening torque		
N·m	kg-m	lb-ft
84 – 120	8.4 – 12.0	61.0 – 87.0

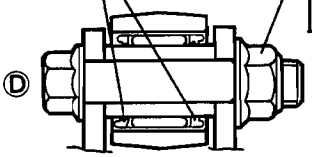

Tightening torque		
N·m	kg-m	lb-ft
84 – 120	8.4 – 12.0	61.0 – 87.0

Downloaded from www.Manualslib.com manuals search engine

SWINGARM PIVOT THRUST CLEARANCE ADJUSTMENT

1. Turn in swingarm thrust adjuster along with the swingarm pivot shaft with the special tool (Thrust adjuster wrench) until the swingarm pivot thrust adjuster seats onto the dust seal cover.
2. Hold the swingarm pivot shaft with a 14-mm hexagon wrench and tighten the swingarm pivot nut to the specified torque.

   85 – 115 N·m (8.5 – 11.5 kg-m, 61.5 – 83.0 lb-ft)
3. Tighten the lock nut to the specified torque.

   60 – 70 N·m (6.0 – 7.0 kg-m, 43.5 – 50.5 lb-ft)

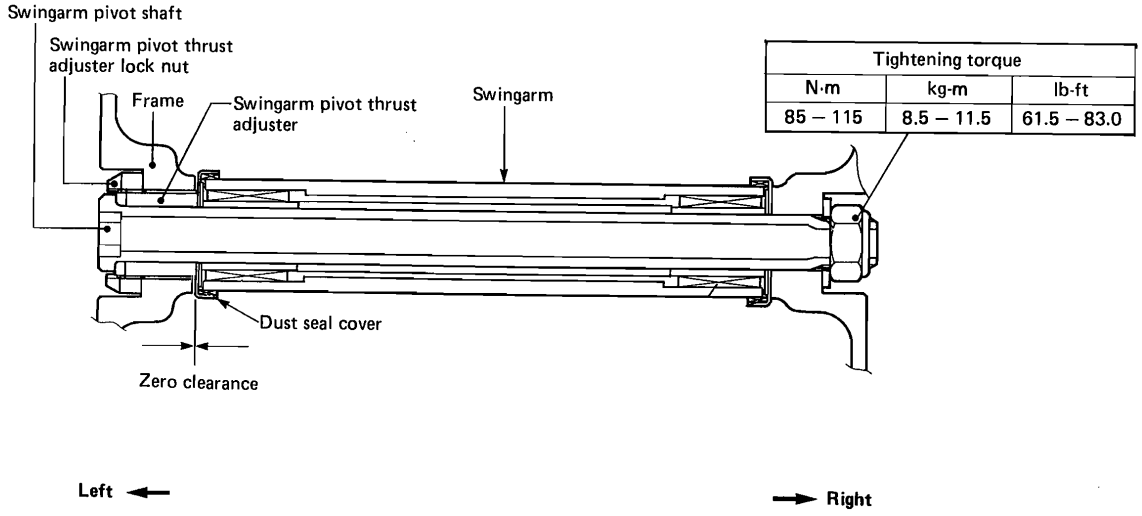

Tightening torque		
N·m	kg-m	lb-ft
85 – 115	8.5 – 11.5	61.5 – 83.0

09900-18720: 14-mm hexagon wrench
09940-14940: Pivot thrust adjuster lock nut wrench
09940-14950: Pivot thrust adjuster wrench

Downloaded from www.Manualslib.com manuals search engine

FINAL INSPECTION AND ADJUSTEMENT

After installing the rear suspension and rear wheel, the following adjustments are required before driving motorcycle.

*Drive chain *Rear brake *Tire pressure *Shock absorber

SUSPENSION SETTING		Front	Rear		
				Damping force	
		Spring preload	Spring preload	Extension (Rebound)	Compression
Solo riding	Softer	5	179 mm (7.05 in)	1	Standard + 1
	Standard	4	179 mm (7.05 in)	2	9 ± 2
	Stiffer	4	179 mm (7.05 in)	2	9 ± 2
Dual riding		4	179 mm (7.05 in)	2	9 ± 2

NOTE:

REAR SUSPENSION DAMPING ADJUSTMENT

Fully turn the damping force adjuster clockwise it is at 0 position and turn out it to 9th click (±2 click).

The STD setting position is 9th click (±2 click) from 0 position.

The STD setting position is obtained so that the painted mark on its adjuster knob is aligned with the indication mark on adjuster body.

FRAME

SEAT RAIL MOUNTING BOLT

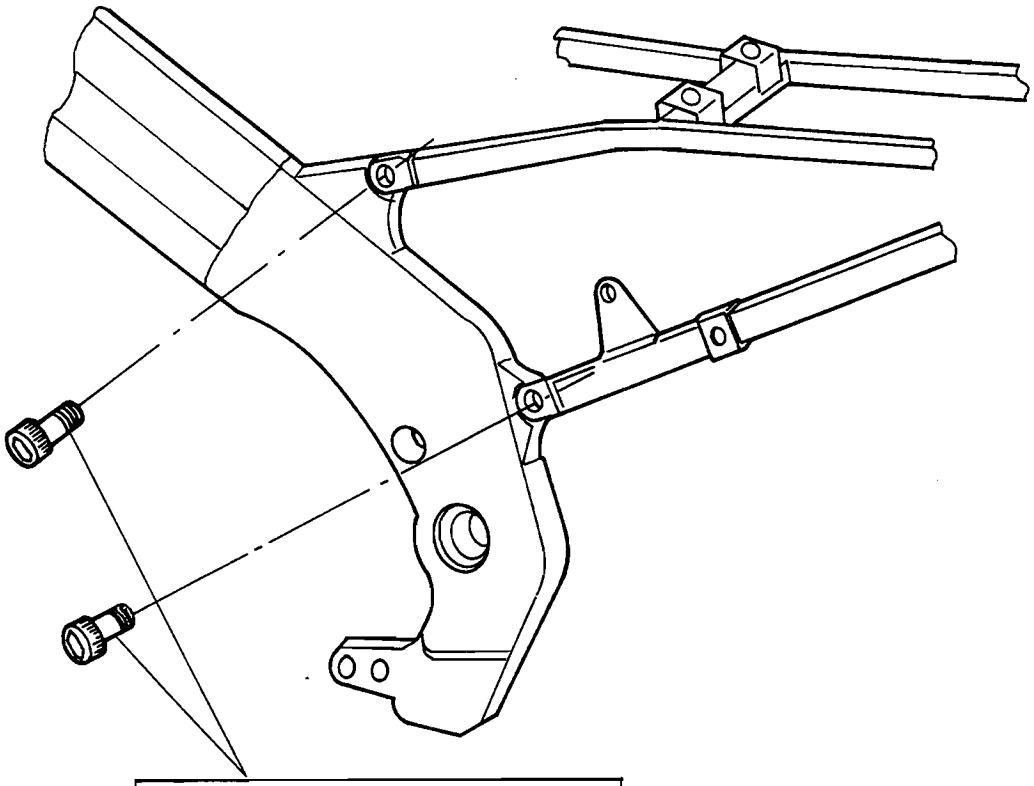

Tightening torque		
N·m	kg-m	lb-ft
45 – 50	4.5 – 5.0	32.5 – 36.0

*Apply SUZUKI THREAD LOCK SUPPER "1322".

Downloaded from www.Manualslib.com manuals search engine

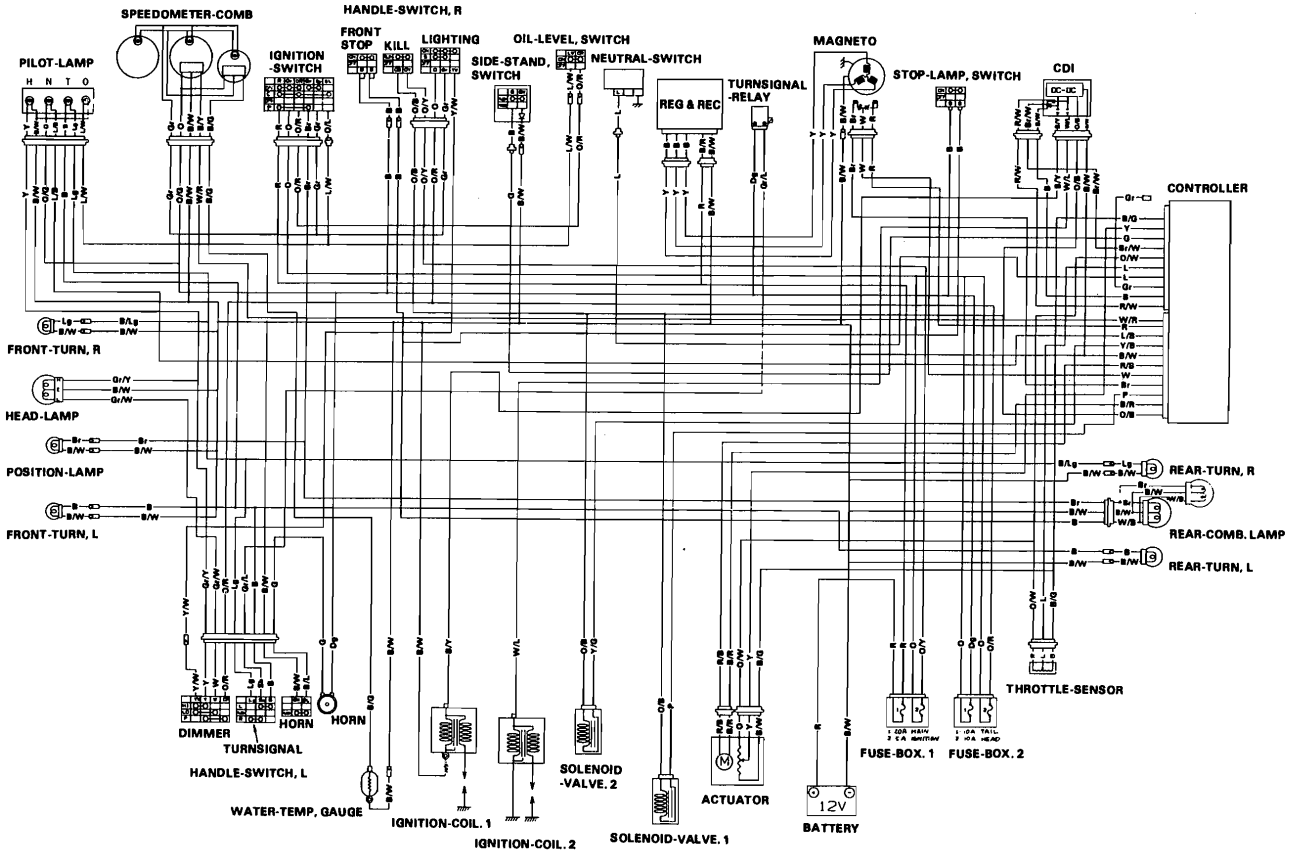

WIRE COLOR

B.....	Black	R.....	Red	Br/W ...	Brown with White tracer		
Br.....	Brown	Sb.....	Sky blue	Gr/L	Gray with Blue tracer	O/W....	Orange with White tracer
Dg.....	Dark green	W.....	White	Gr/W ...	Gray with White tracer	O/Y.....	Orange with Yellow tracer
G.....	Green	Y.....	Yellow	Gr/Y	Gray with Yellow tracer	O/B.....	Orange with Black tracer
Gr.....	Gray	B/G.....	Black with Green tracer	L/B	Blue with Black tracer	R/B.....	Red with Black tracer
L.....	Blue	B/Lg	Black with light green tracer	L/W	Blue with White tracer	W/R	White with Red tracer
Lg.....	Light green	B/R.....	Black with Red tracer	O/B.....	Orange with Black tracer	Y/B.....	Yellow with Black tracer
O.....	Orange	B/W	Black with White tracer	O/G	Orange with Green tracer	Y/G.....	Yellow with Green tracer
P.....	Pink	B/Y.....	Black with Yellow tracer	O/R.....	Orange with Red tracer	Y/W	Yellow with White tracer

Downloaded from www.Manualslib.com manuals search engine

WIRE HARNESS ROUTING

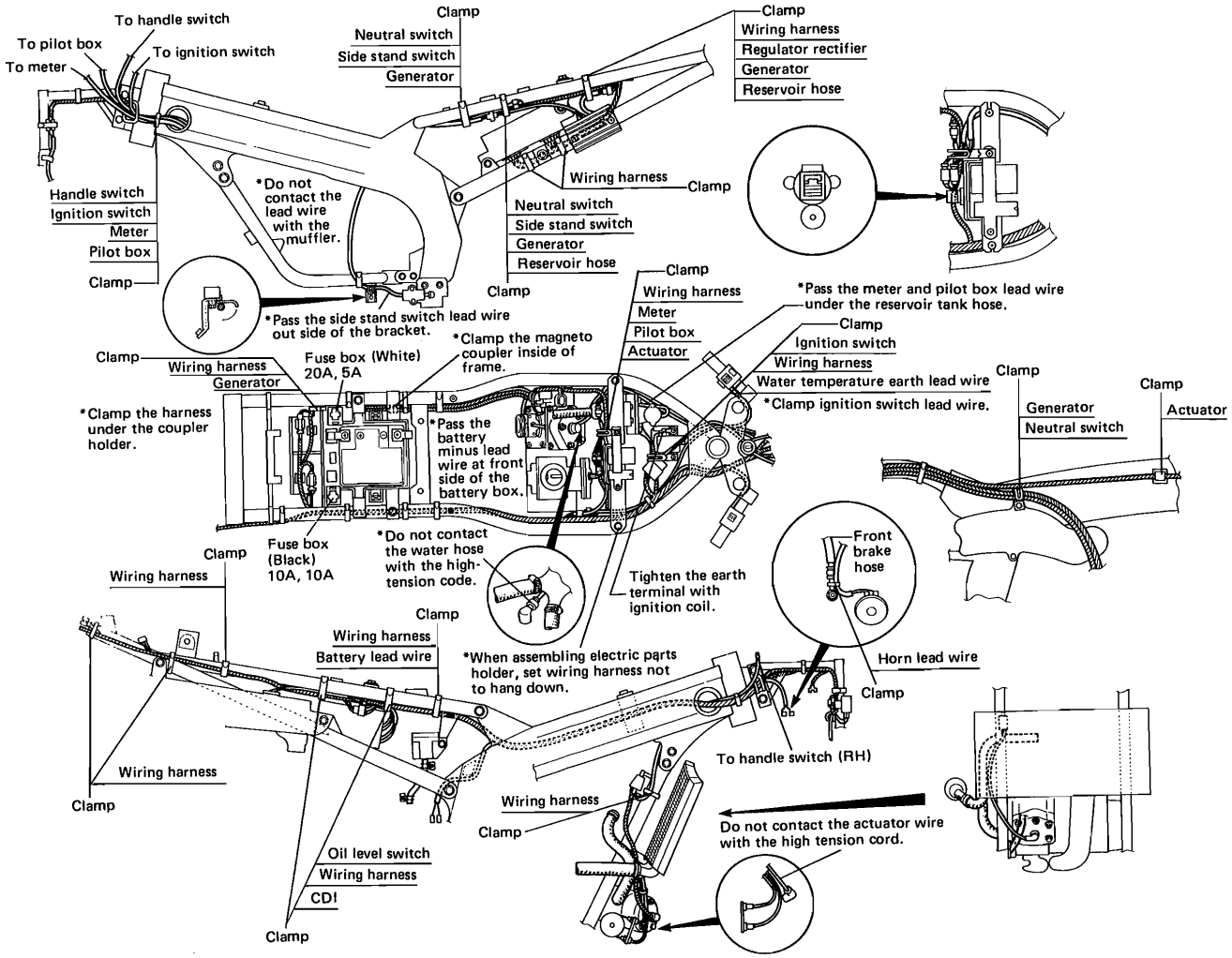

Downloaded from www.Manualslib.com manuals search engine

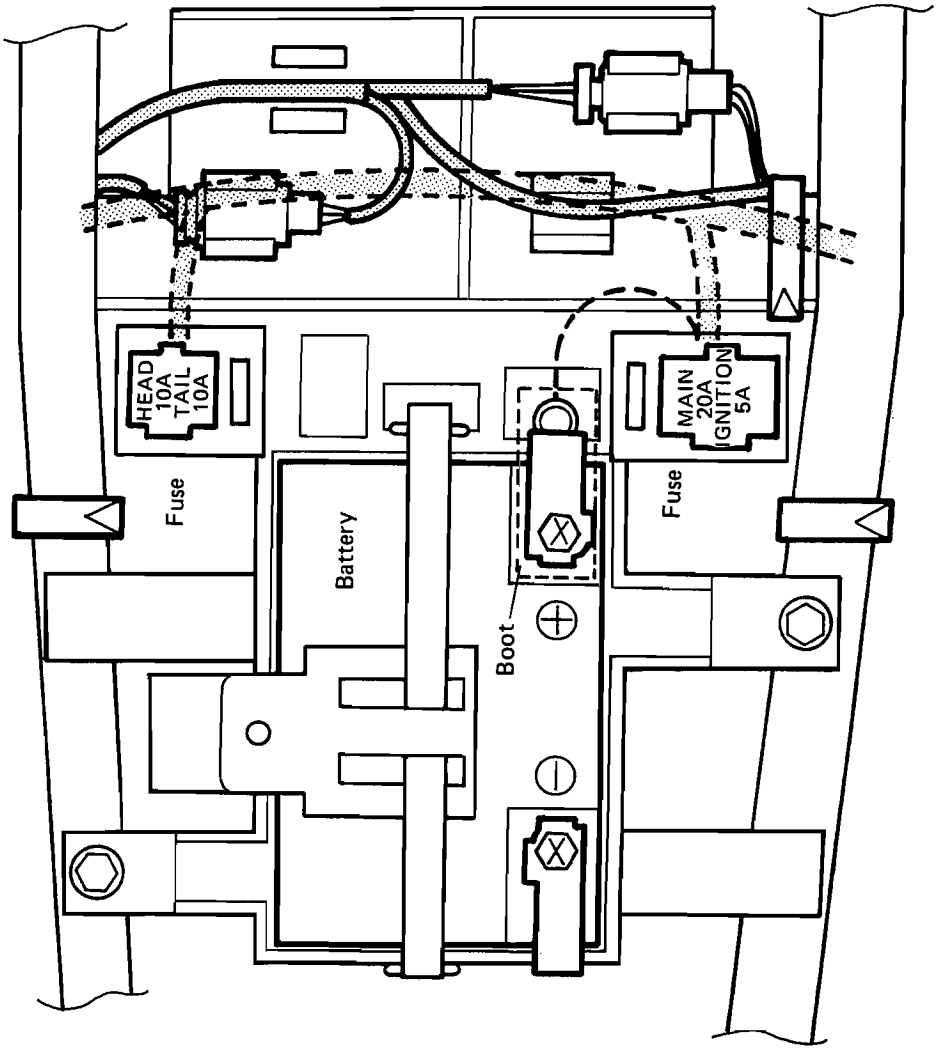

Downloaded from www.Manualslib.com manuals search engine

CABLE ROUTING

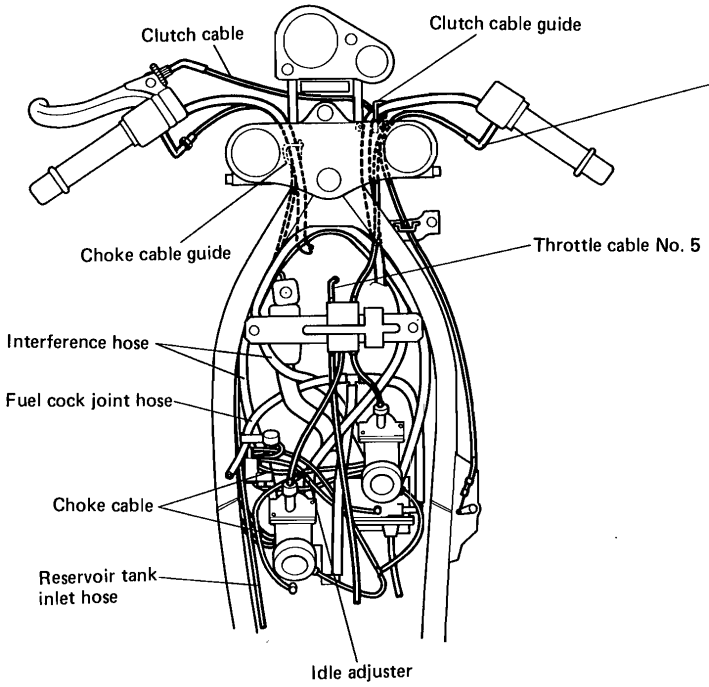

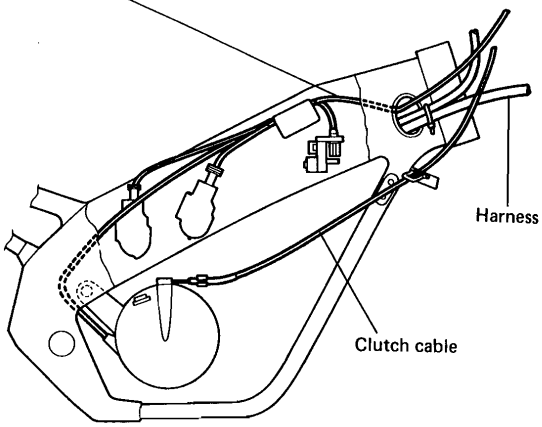

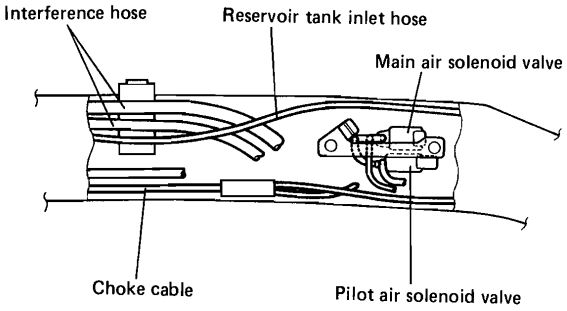

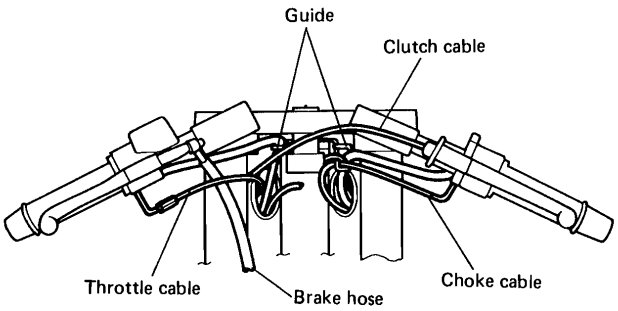

Downloaded from www.Manualslib.com manuals search engine

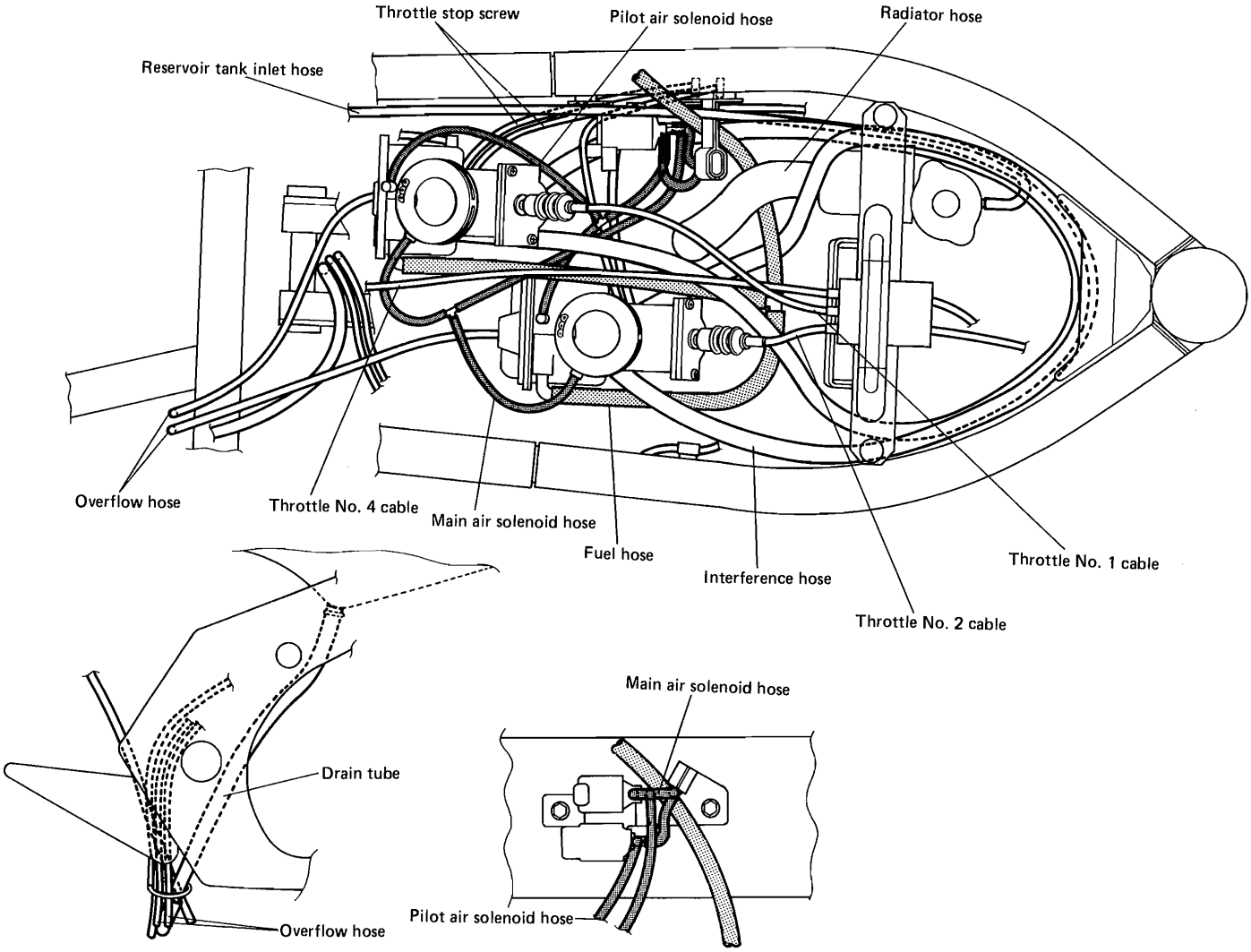

Downloaded from www.Manualslib.com manuals search engine

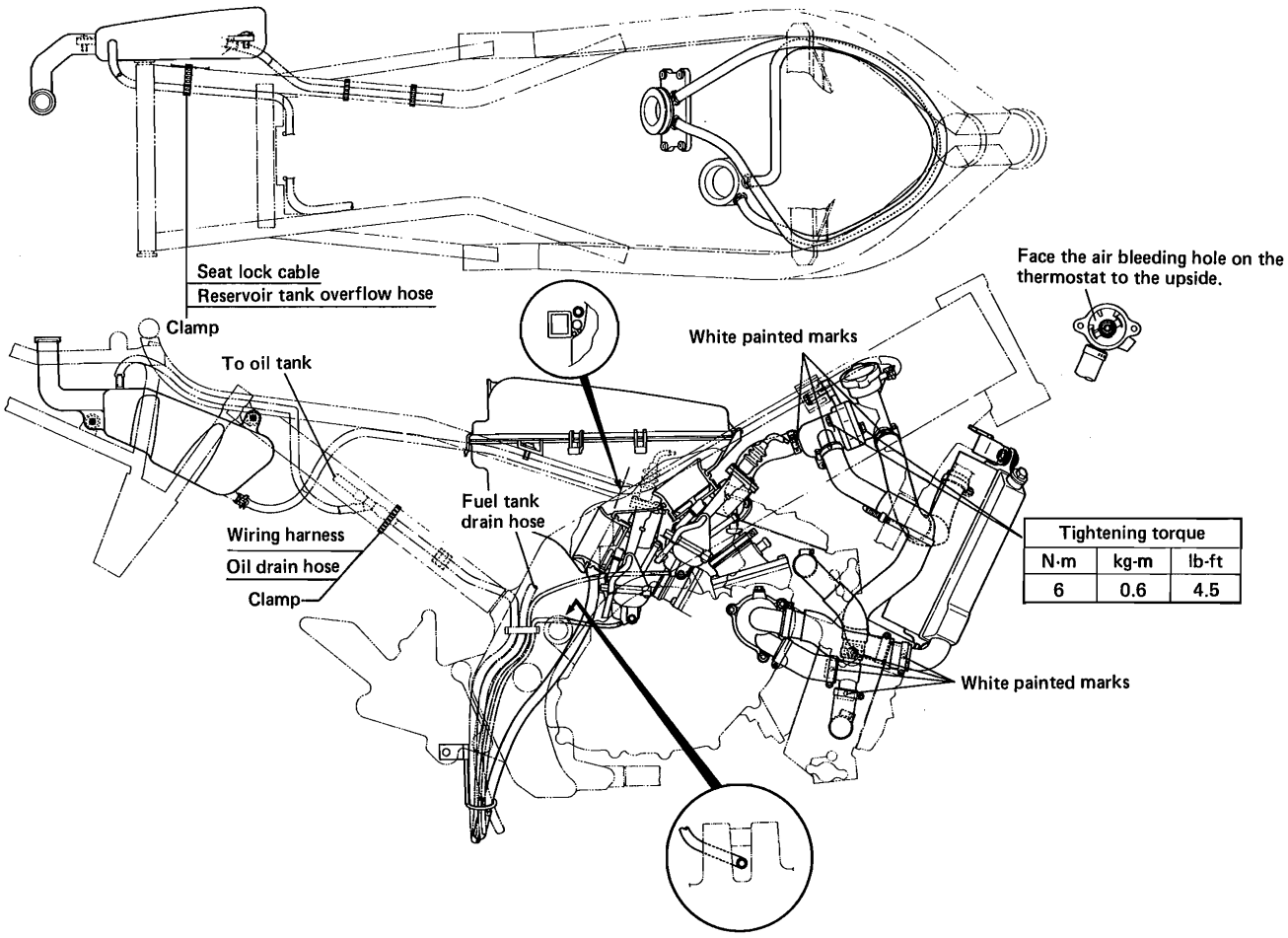

Tightening torque		
N·m	kg-m	lb-ft
6	0.6	4.5

Downloaded from www.Manualslib.com manuals search engine

CAUTION:
Be careful not to make the wrong connection of hoses, otherwise piston seizuring may happen.

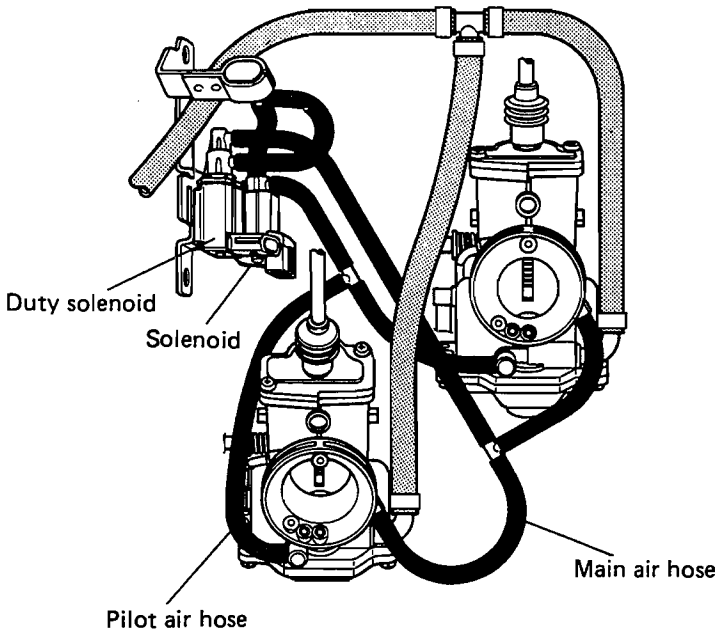

- Adjust the following points after assembling the carburetor.
  * Adjustment of engine idle speed.
  * Adjustment of throttle cable play.
  * Adjustment of oil pump lever.
  * Carburetor synchronization.

Downloaded from www.Manualslib.com manuals search engine

FRONT BRAKE HOSE ROUTING

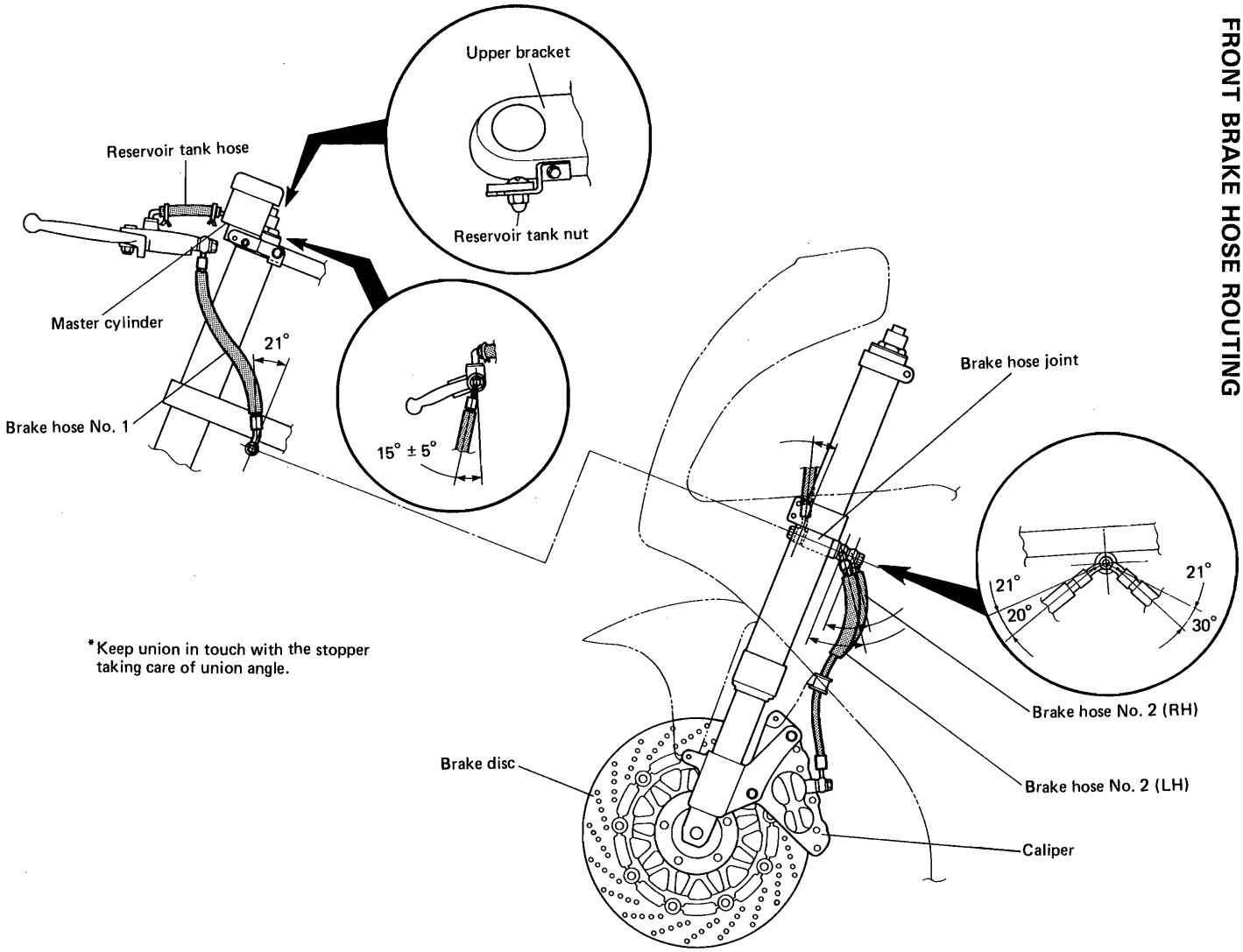

*Keep union in touch with the stopper taking care of union angle.

Downloaded from www.Manualslib.com manuals search engine

REAR BRAKE HOSE ROUTING

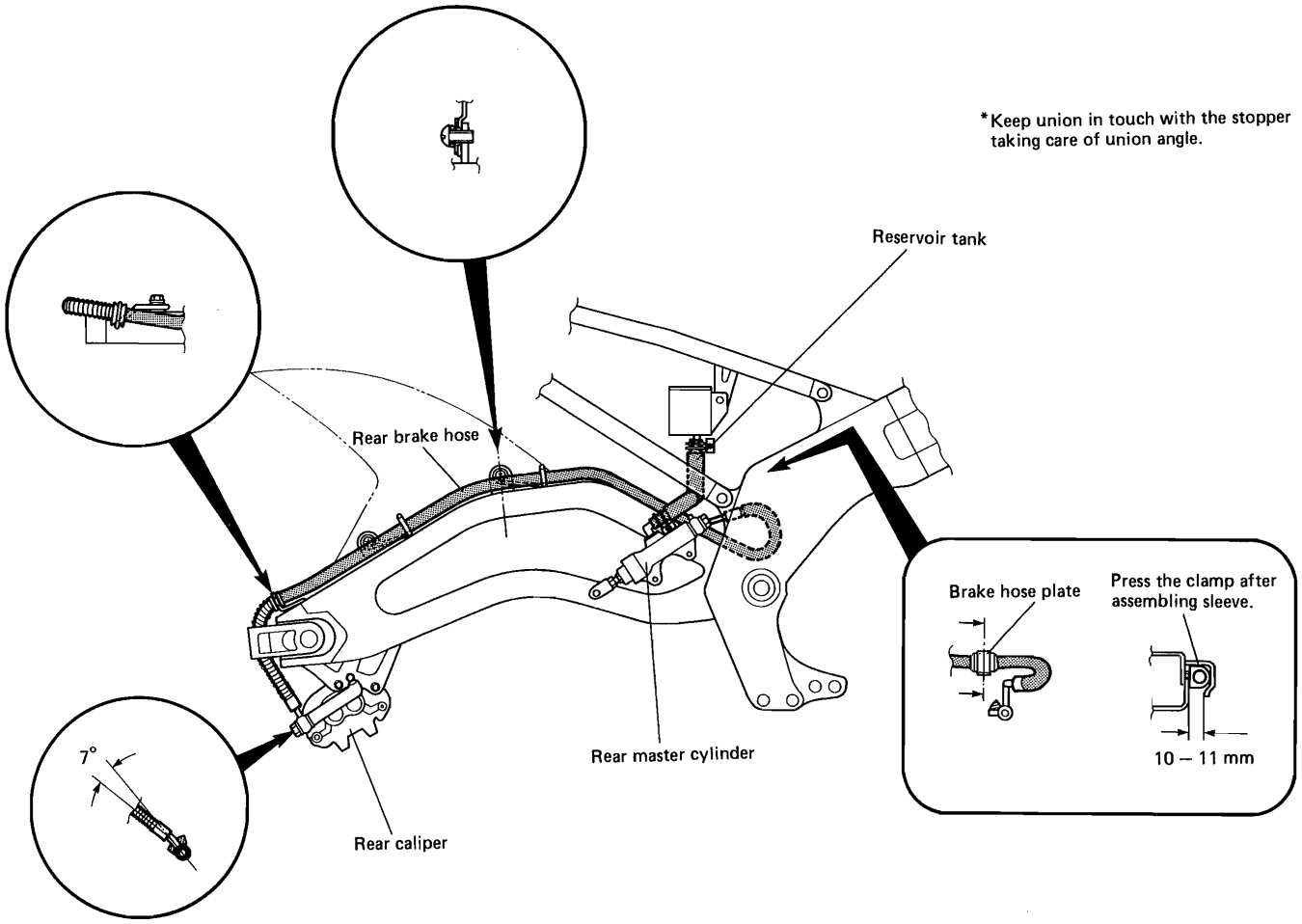

Downloaded from www.Manualslib.com manuals search engine

RESERVOIR TANK HOSE ROUTING

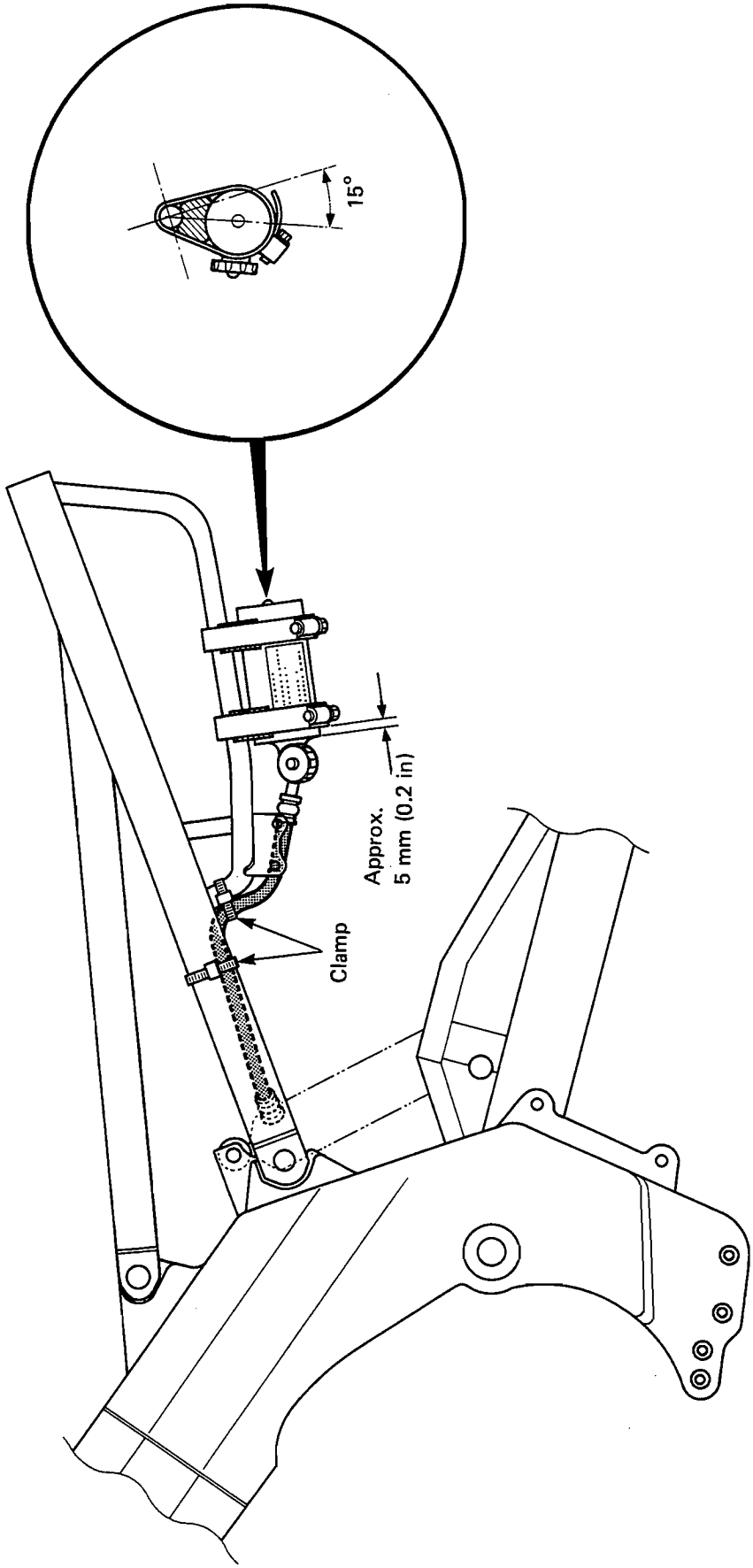

Downloaded from www.Manualslib.com manuals search engine

RGV250N ('92-MODEL)

FOREWORD

This section describes service data, service specifications and servicing procedures which differ from those of the RGV250M ('91-model).

NOTE:
Any differences between "M" (91-model) and "N" ('92-model) in specifications and service data are clearly indicated with the asterisk marks (*). Please refer to the sections 1 through 10 for details which are not given in this section.

CONTENTS

SPECIFICATIONS **11- 1**
SERVICE DATA **11- 2**
ACTUATOR **11- 8**
FRONT FORK **11- 9**
CONTROL UNIT (GERMANY MODEL ONLY) **11-10**
SUSPENSION SETTING **11-10**
WIRING DIAGRAM (GERMANY MODEL ONLY) **11-11**
WIRE HARNESS ROUTING **11-12**
CABLE ROUTING **11-13**
HOSE ROUTING (GERMANY MODEL ONLY) **11-14**

Downloaded from www.Manualslib.com manuals search engine

SPECIFICATIONS

DIMENSIONS AND DRY MASS

Overall length	*1995 mm (78.5 in) ... E-02, 04, 21, 24, 34 *2080 mm (81.9 in) ... E-22
Overall width	710 mm (27.9 in)
Overall height	1070 mm (42.1 in)
Wheelbase	1380 mm (54.3 in)
Ground clearance	125 mm (4.9 in)
Seat height	766 mm (30.2 in)
Dry mass	139 kg (306 lbs)

ENGINE

Type	Two-stroke, water-cooled, 90° V-twin
Number of cylinders	2
Bore	56.0 mm (2.205 in)
Stroke	50.6 mm (1.992 in)
Piston displacement	249 cm^3 (15.2 cu. in)
Corrected compression ratio	7.3 : 1
Carburetor	MIKUNI TM34SS
Air cleaner	Polyurethane foam element
Starter system	Primary kick
Lubrication system	SUZUKI CCI

TRANSMISSION

Clutch	Wet multi-plate type
Transmission	6-speed constant mesh
Gearshift pattern	1-down, 5-up
Primary reduction	2.565 (59/23)
Final reduction	3.071 (43/14)
Gear ratios, Low	2.454 (27/11)
2nd	1.625 (26/16)
3rd	1.235 (21/17)
4th	1.045 (23/22)
5th	0.916 (22/24)
Top	0.840 (21/25)
Drive chain	DID 520V_2 or RK520SMOZ$_9$ 114 links

These specifications are subject to change without notice.
Asterisk mark (*) indicates the New "N" model specifications.

CHASSIS

Front suspension	Inverted telescopic, coil spring, oil damped, inner rod type, spring 5-way, adjustable.
Rear suspension	Link type system, gas/coil spring, oil damped, spring pre-load fully adjustable, extension damping force 4-way and compression damping force fully adjustable.
Steering angle	30° (right & left)
Caster	65°
Trail	94 mm (3.7 in)
Turning radius	3.1 m (10.2 ft)
Front brake	Disc brake, twin
Rear brake	Disc brake
Front tire size	110/70 R17 54H
Rear tire size	150/60 R17 66H
Front fork stroke	120 mm (4.7 in)
Rear wheel travel	130 mm (5.1 in)

ELECTRICAL

Ignition type	SUZUKI "PEI"
Ignition timing	10° B.T.D.C. at 1300 r/min
Spark plug	BR9ECM or W27 EMR-C
Battery	12V 10.8 kC (3Ah)/ 10 HR
Generator	Three-phase A.C. generator
Fuse	20/10/10/5A

CAPACITIES

Fuel tank including reserve	16 L (4.2/3.5 US/Imp gal)
reserve	3.5 L (0.9/0.8 US/Imp gal)
Engine oil	1.1 L (1.2/1.0 US/Imp qt)
Transmission	700 ml (23.7/24.6 US/Imp oz)
Coolant	1.9 L (2.0/1.7 US/Imp qt)
Front fork oil	429 ml (14.5/15.1 US/Imp oz)

Downloaded from www.Manualslib.com manuals search engine

SERVICE DATA

CYLINDER + PISTON + PISTON RING

Unit: mm (in)

ITEM	STANDARD			LIMIT
Piston to cylinder clearance	0.055 – 0.071 (0.0022 – 0.0028)			0.120 (0.0047)
Cylinder bore	56.000 – 56.023 (2.2047 – 2.2056)			Nicks or Scratches
Piston diam.	55.936 – 55.961 (2.2022 – 2.2032) Measure at 19 (0.7) from the skirt end			55.880 (2.199)
Cylinder distortion	——			0.05 (0.002)
Cylinder head distortion	——			0.05 (0.002)
Piston ring free end gap	1st & 2nd	T	Approx. 5.0 (0.19)	4.0 (0.15)
		T	Approx. 6.0 (0.24)	4.8 (0.19)
Piston ring end gap	1st & 2nd		0.15 – 0.30 (0.006 – 0.012)	0.70 (0.027)
Piston ring to groove clearance	1st & 2nd		0.02 – 0.06 (0.0008 – 0.0024)	——
Piston pin bore	16.002 – 16.010 (0.6300 – 0.6303)			16.036 (0.6313)
Piston pin O.D.	15.995 – 16.000 (0.6297 – 0.6299)			15.980 (0.6291)

CONROD + CRANKSHAFT

Unit: mm (in)

ITEM	STANDARD	LIMIT
Conrod small end I.D.	20.003 – 20.011 (0.7875 – 0.7878)	20.047 (0.7893)
Conrod deflection	——	3.0 (0.12)
Crank web to web width	$48.5^{+0.2}_{0}$ $(1.909^{+0.008}_{0})$	——
Crankshaft runout	——	0.05 (0.002)

OIL PUMP

ITEM	SPECIFICATION
Oil pump reduction ratio	4.897 (59/23 x 27/11 x 21/27)
CCI pump discharge rate (Full open)	4.8 – 6.0 ml for 2 minutes at 2 000 r/min.

CLUTCH

Unit: mm (in)

ITEM	STANDARD	LIMIT
Clutch cable play	2 – 3 (0.08 – 0.12)	——
Drive plate thickness	2.99 – 3.01 (0.118 – 0.119)	2.69 (0.11)
Drive plate claw width	15.8 – 16.0 (0.62 – 0.63)	15.3 (0.60)

Downloaded from www.Manualslib.com manuals search engine

ITEM	STANDARD	LIMIT
Driven plate distortion	——	0.1 (0.004)
Clutch spring free length	——	34.8 (1.37)

THERMOSTAT + RADIATOR

ITEM	STANDARD	LIMIT
Thermostat valve opening temperature	50 ± 2°C	——
Thermostat valve lift	Over 7 mm at 65°C	——
Radiator cap valve opening pressure	110 kPa (1.1 kg/cm²)	——

TRANSMISSION

Unit: mm (in) Except ratio

ITEM		STANDARD	LIMIT
Primary reduction ratio		2.565 (59/23)	——
Final reduction ratio		3.071 (43/14)	——
Gear ratios	Low	2.454 (27/11)	——
	2nd	1.625 (26/16)	——
	3rd	1.235 (21/17)	——
	4th	1.045 (23/22)	——
	5th	0.916 (22/24)	——
	Top	0.840 (21/25)	——
Shift fork to groove clearance		0.1 – 0.3 (0.004 – 0.011)	0.5 (0.0196)
Shift fork groove width	No. 1 & No. 2	4.0 – 4.1 (0.157 – 0.161)	——
	No. 3	5.5 – 5.6 (0.216 – 0.220)	——
Shift fork thickness	No. 1 & No. 2	3.8 – 3.9 (0.149 – 0.153)	——
	No. 3	5.3 – 5.4 (0.208 – 0.212)	——

DRIVE CHAIN

ITEM		STANDARD	LIMIT
Drive chain	Type	D.I.D.: 520 V2 TAKASAGO: 520SMOZ9	——
	Links	114 links	——
	20-pitch length	——	319.4 (12.574)
Drive chain slack		25 – 35 (0.98 – 1.38)	——

CARBURETOR

ITEM	SPECIFICATION	
	E-02, 04, 21, 24, 34	E-22
Carburetor type	MIKUNI TM34SS	←
Bore size	34 mm (1.34 in)	←
I.D. No.	22D2	*22D7

Asterisk mark (*) indicates the New "N" model specifications.

Downloaded from www.Manualslib.com manuals search engine

ITEM		SPECIFICATION	
		E-02, 04, 21, 24, 34	E-22
Idle r/min.		1 300 ± 150 r/min	1 300 ± 100 r/min
Fuel level		7.1 ± 0.5 mm (0.28 ± 0.02 in)	←
Float height		8 ± 1.0 mm (0.31 ± 0.04 in)	←
Main jet	(M.J.)	L: # 270, R: # 280	L:#270, R:#280
Jet needle	(J.N.)	6GH8-55-3	*6FL89-55-3
Needle jet	(N.J.)	O–8	*O–7
Cut-away	(C.A.)	1.5 mm	←
Pilot jet	(P.J.)	# 27.5	*#22.5
By-pass	(B.P.)	0.6 mm	——
Pilot outlet	(P.O.)	0.6 mm	*1.0 mm
Valve seat	(V.S.)	2.5 mm	←
Starter jet	(G.S.)	# 45	←
Power jet	No. 1	L: # 55, R: # 35	*L:#45, R:#35
Power jet	No. 2	0.7 mm	←
Air screw	(A.S.)	——	*1-1/4 turns out
Throttle cable play		0.5 – 1.0 mm (0.02 – 0.04 in)	←

ELECTRICAL

Unit: mm (in)

ITEM	SPECIFICATION		NOTE
Ignition timing	10° B.T.D.C. at 1 300 r/min.		
Spark plug	Type	NGK BR9ECM ND W27EMR-C	
	Gap	0.7 – 0.8	
Spark performance	Over 8 (0.3) at 1 atm.		
Ignition coil resistance	Primary	B/Y – W/L 0.17 – 0.23 Ω	
	Secondary	Plug cap – Terminal 15 – 20 kΩ	
Generator coil resistance	Y – Y 0.4 – 0.6 Ω		
Magneto coil resistance	Pick up coil	Br – B 80 – 120 Ω	
		R – W 80 – 120 Ω	
Generator no-load voltage	More than 49 V (AC) at 5 000 r/min.		Y – Y
Regulated voltage	13.0 – 15.5 V at 5 000 r/min.		
Water temperature gauge resistance	189 – 260 Ω at 50°C		
	24 – 28 Ω at 115°C		
Battery	Type designation	YT4L-BS	
	Capacity	12V 10.8 kC (3Ah)/10 HR	
	Standard electrolyte S.G.	1.32 at 20°C (68°F)	
Fuse size	Main	20 A	
	Ignition	5 A	
	Head	10 A	
	Tail	10 A	

Asterisk mark (*) indicates the New "N" model specifications.

Downloaded from www.Manualslib.com manuals search engine

WATTAGE

Unit: W

ITEM		SPECIFICATION
Headlight	HI	60
	LO	55
Tail/Brake light		5/21
Turn signal light		21
Tachometer light		3
Speedometer light		3
Turn signal indicator light		2
High beam indicator light		2
Neutral indicator light		2
Oil level warning light		2
Parking or city light		4
Water temp. meter light		1.7

BRAKE + WHEEL

Unit: mm (in)

ITEM	STANDARD		LIMIT
Rear brake pedal height	60 – 70 (2.36 – 2.76)		———
Brake disc thickness	Front	4.3 – 4.7 (0.17 – 0.18)	4.0 (0.16)
	Rear	4.8 – 5.1 (0.19 – 0.20)	4.5 (0.18)
Brake disc runout	———		0.3 (0.01)
Master cylinder bore	Front	15.870 – 15.913 (0.6248 – 0.6264)	———
	Rear	12.700 – 12.743 (0.4999 – 0.5016)	———
Master cylinder piston	Front	15.827 – 15.854 (0.6231 – 0.6241)	———
	Rear	12.657 – 12.684 (0.4983 – 0.4993)	———
Brake caliper cylinder bore	Front	30.230 – 30.300 (1.1901 – 1.1929) 33.960 – 34.030 (1.3370 – 1.3397)	———
	Rear	24.000 – 24.076 (0.9449 – 0.9479)	———
Brake caliper piston diam.	Front	30.160 – 30.200 (1.1873 – 1.1889) 33.897 – 33.930 (1.3345 – 1.3358)	———
	Rear	23.950 – 24.000 (0.9429 – 0.9449)	———
Wheel rim runout	Axial	———	2.0 (0.08)
	Radial	———	2.0 (0.08)
Wheel axle runout	Front	———	0.25 (0.010)
	Rear	———	0.25 (0.010)

Downloaded from www.Manualslib.com manuals search engine

ITEM	STANDARD		LIMIT
Tire size	Front	110/70 R17 54H	——
	Rear	150/60 R17 66H	——
Tire tread depth	Front	——	1.6 (0.06)
	Rear	——	2.0 (0.08)

SUSPENSION

Unit: mm (in)

ITEM	STANDARD	LIMIT	NOTE
Front fork stroke	120 (4.7)	——	
Front fork spring free length	——	330 (13.0)	
Front fork oil level	109 (4.29)	——	
Rear wheel travel	130 (5.1)	——	
Swingarm pivot shaft runout	——	0.3	

FUEL + OIL + COOLANT

ITEM	SPECIFICATION		NOTE
Fuel type	The gasoline used should be graded 85 to 95 octane in Research Method and should be unleaded type where they are available.		
Fuel tank including reserve	16 L (4.2/3.5 US/Imp gal)		
reserve	3.5 L (0.9/0.8 US/Imp gal)		
Engine oil type	SUZUKI CCI or CCI SUPER OIL		
Engine oil tank capacity	1.1 L (1.2/1.0 US/Imp qt)		
Transmission oil type	SAE 10W/40		
Transmission oil capacity	Change	700 ml (23.6/24.6 US/Imp oz)	
	Overhaul	800 ml (27.0/28.1 US/Imp oz)	
Front fork oil type	Fork oil # 10		
Front fork oil capacity (each leg)	429 ml (14.5/15.1 US/Imp oz)		
Brake fluid type	DOT4		
Coolant type	Use an anti-freeze & Summer coolant compatible with aluminum radiator, mixed with distilled water only, at the ratio of 50 : 50.		
Radiator including reserve	1 900 ml (2.0/1.7 US/Imp qt)		

Downloaded from www.Manualslib.com manuals search engine

TIRE PRESSURE

COLD INFLATION TIRE PRESSURE	NORMAL RIDING					
	SOLO RIDING			DUAL RIDING		
	kPa	kg/cm²	psi	kPa	kg/cm²	psi
FRONT	200	2.00	29	200	2.00	29
REAR	225	2.25	33	250	2.50	36

Downloaded from www.Manualslib.com manuals search engine

ACTUATOR

The oil pump pulley has been separated from the actuator pulley.

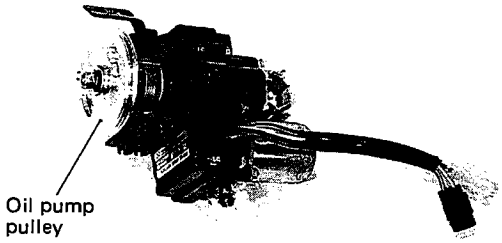

OPERATION OF OIL PUMP

When the actuator pulley turns, the lug Ⓐ on the actuator pulley to push the oil pump pulley groove Ⓑ, and thus oil pump is operated by the oil pump pulley when the exhaust valve is over half opening condition.

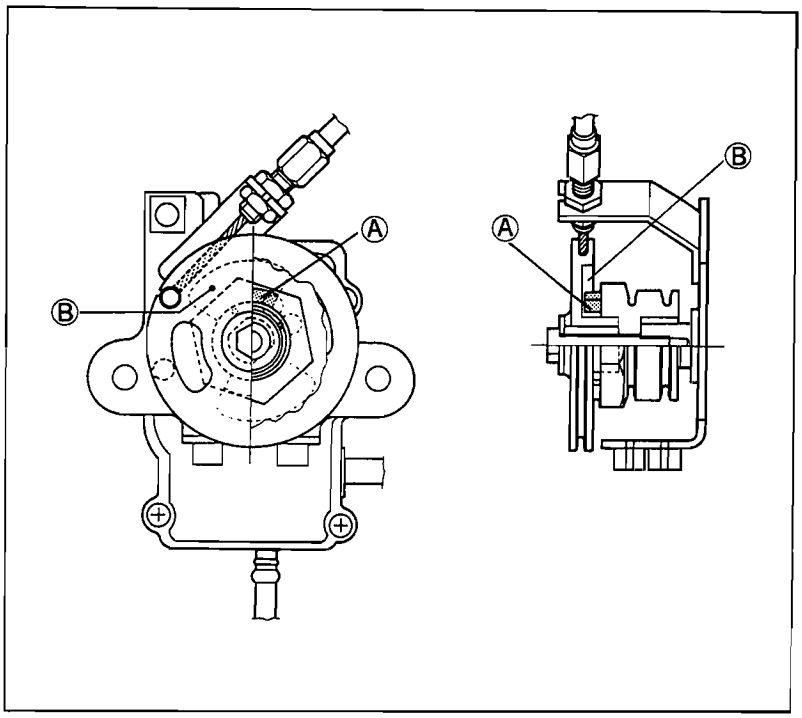

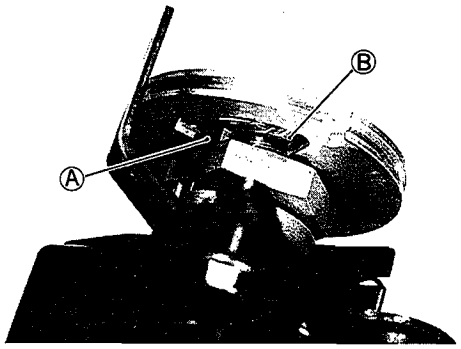

DISASSEMBLY

- Remove the oil pump pulley by removing the bolt ① while holding the actuator pulley with an adjuster wrench.

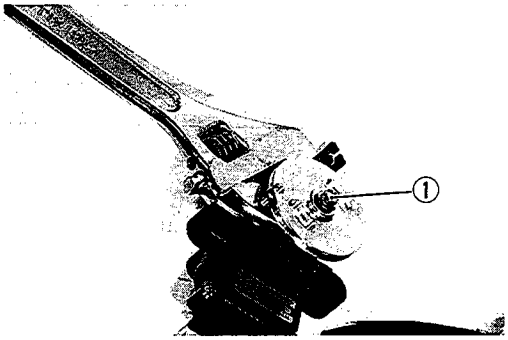

- Remove the oil pump pulley ②, spring ③ and actuator pulley ④ from the actuator body.

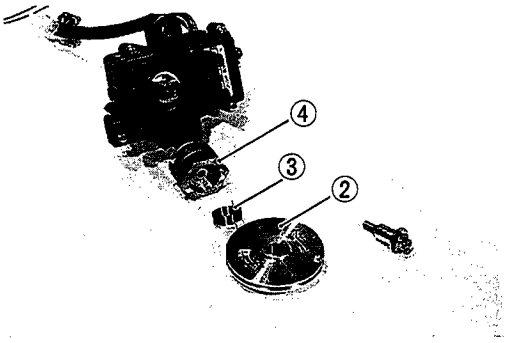

Downloaded from www.Manualslib.com manuals search engine

REASSEMBLY

- Install the ends of the spring into the hole Ⓐ in the oil pump pulley and hole Ⓑ in the actuator pulley.

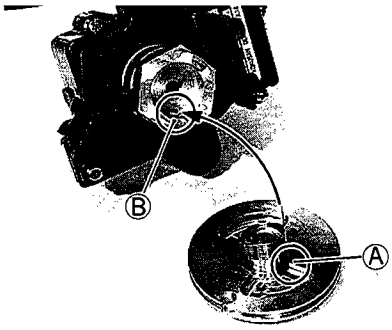

- Set the groove Ⓒ in the oil pump pulley to the lug Ⓓ on the actuator pulley.

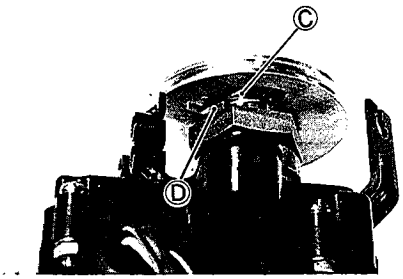

THROTTLE SENSOR

CAUTION:
Do not remove the throttle sensor ① from the throttle cable case ② . This component is PRE-SET at the factory by the very specialized equipment.

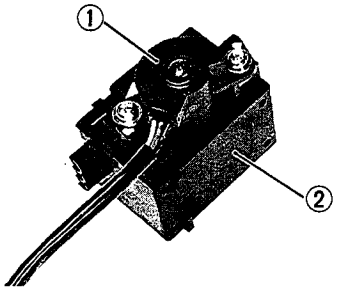

FRONT FORK

The oil seal housing is combined to the outer tube.

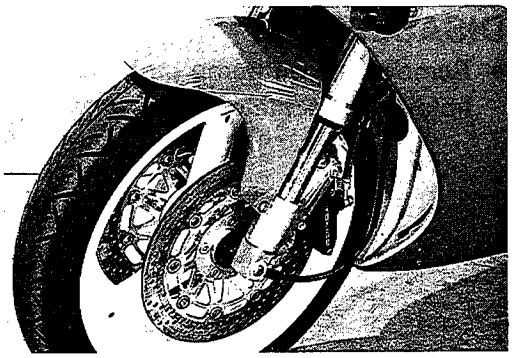

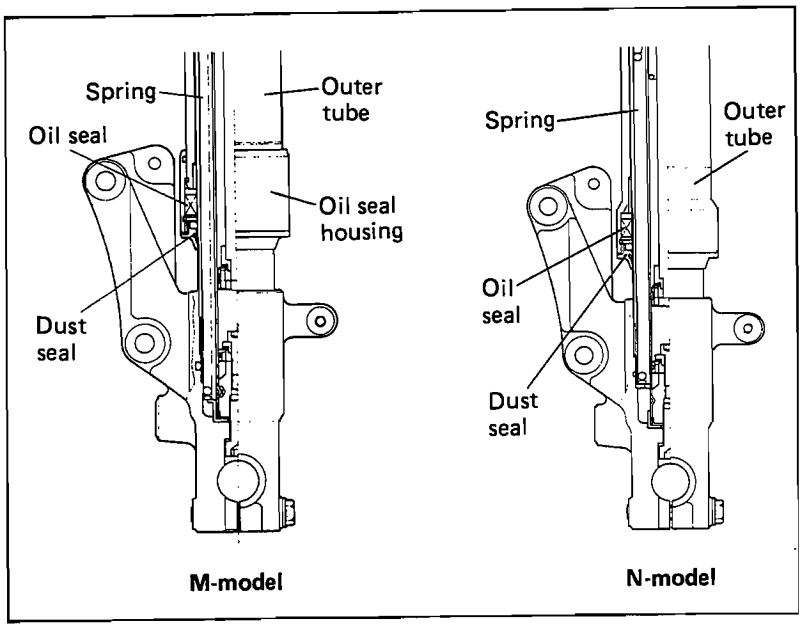

Downloaded from www.Manualslib.com manuals search engine

CONTROL UNIT
(GERMANY MODEL ONLY)

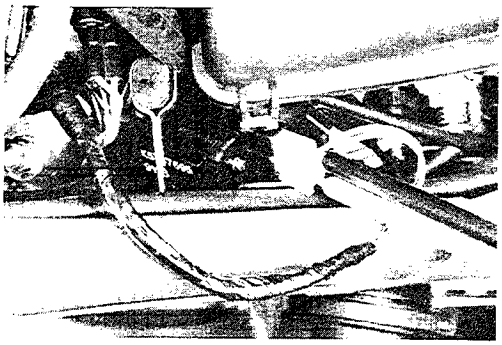

The control unit has been changed, together with this change, the inspection of the solenoid valve has been changed.

SOLENOID VALVE CHECK
(GERMANY MODEL ONLY)

- Check the operation of SOLENOID VALVE with the pocket tester (range: DC25V).
- Insert a ⊖ probe of pocket tester to the Y/G lead wire's coupler and a ⊕ probe of pocket tester to the O/B lead wire's coupler.
- Turning the "REVOLUTION" dial gradually to check the following operations at the specified rpm and each gear position. (UNIT NO.: 22D90 ..... For Germany model)

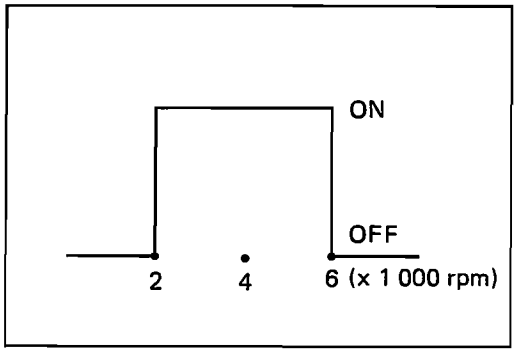

GEAR POSITION
(Low, 2nd, 3rd and 4th)
At 2 000 rpm – "OFF"
At 4 000 rpm – "ON"
At 6 000 rpm – "OFF"

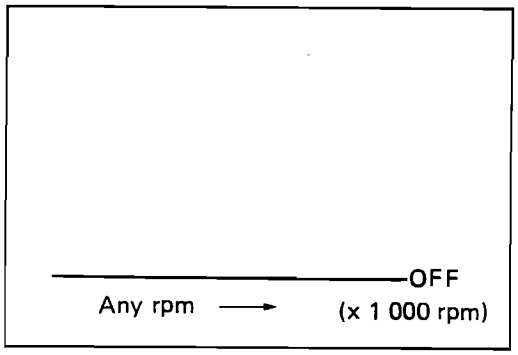

GEAR POSITION
(Neutral, 5th and Top)
Any rpm – "OFF"

SUSPENSION SETTING

SUSPENSION SETTING TABLE

		Front	Rear		
				Damping force	
		Spring preload	Spring preload	Extension (Rebound)	Compression
Solo riding	Softer	5	179 mm (7.05 in)	1	1/2 turn out from STD
	Standard	4	179 mm (7.05 in)	2	1-1/4 turns in
	Stiffer	4	179 mm (7.05 in)	2	1-1/4 turns in
Dual riding		4	179 mm (7.05 in)	2	1-1/4 turns in

NOTE:
REAR SUSPENSION DAMPING ADJUSTMENT
Fully turn the damping force adjuster counterclockwise, it is at the softest position and turn it in to 1-1/4 turns. (The STD setting position is 1-1/4 turns from the softest position.)

Downloaded from www.Manualslib.com manuals search engine

WIRING DIAGRAM (GERMANY MODEL ONLY)

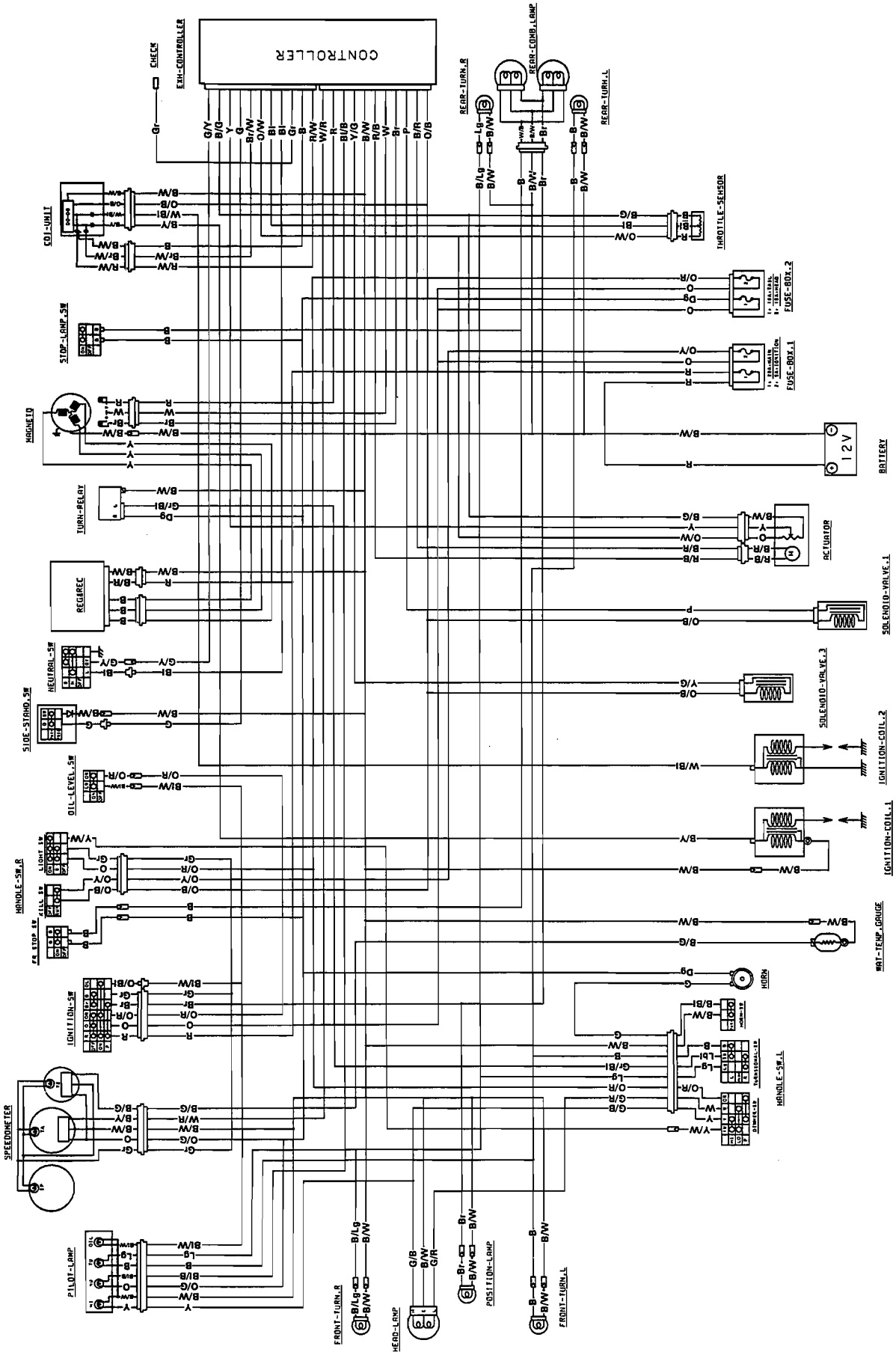

Downloaded from www.Manualslib.com manuals search engine

WIRE HARNESS ROUTING

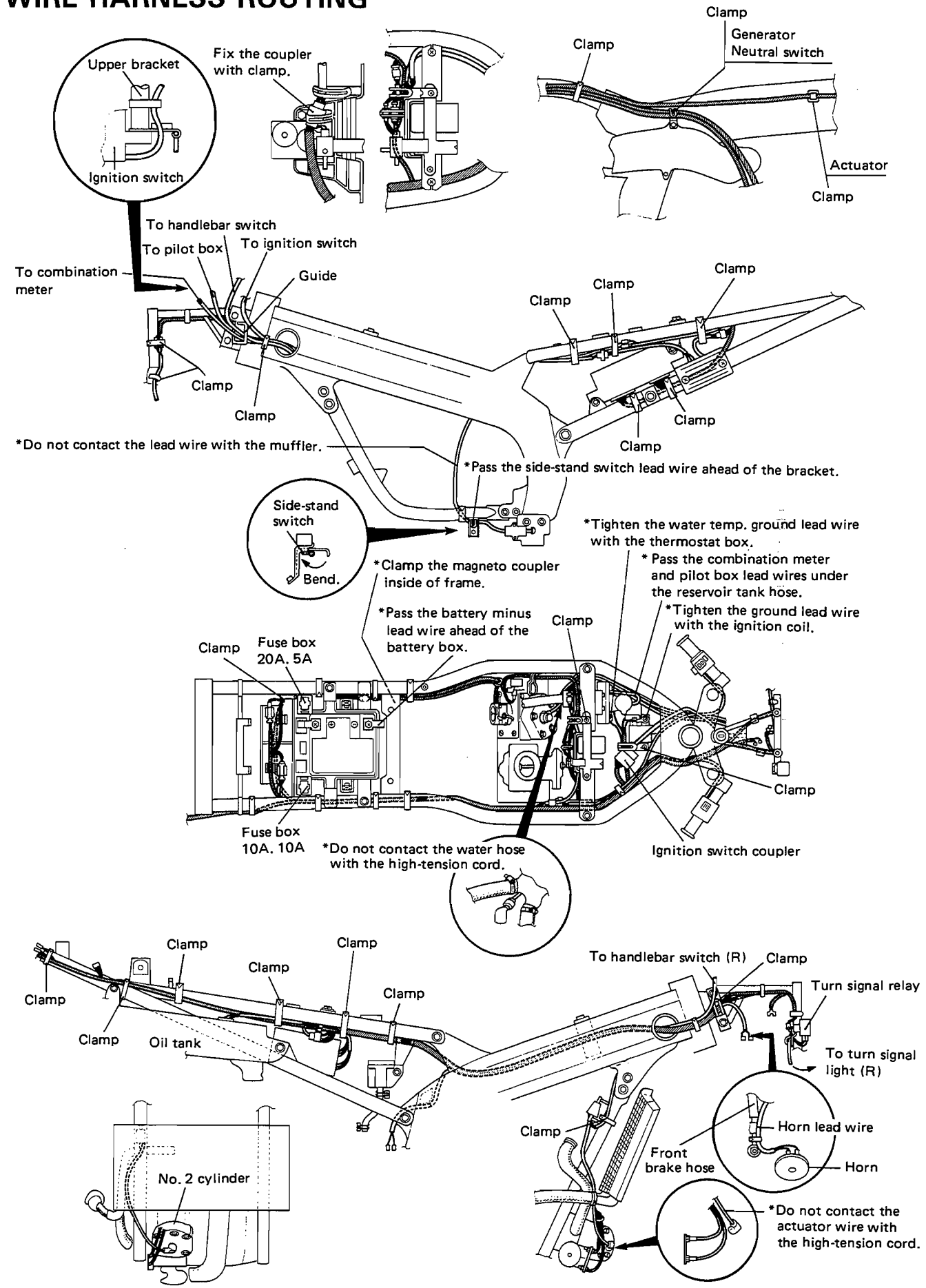

Downloaded from www.Manualslib.com manuals search engine

CABLE ROUTING

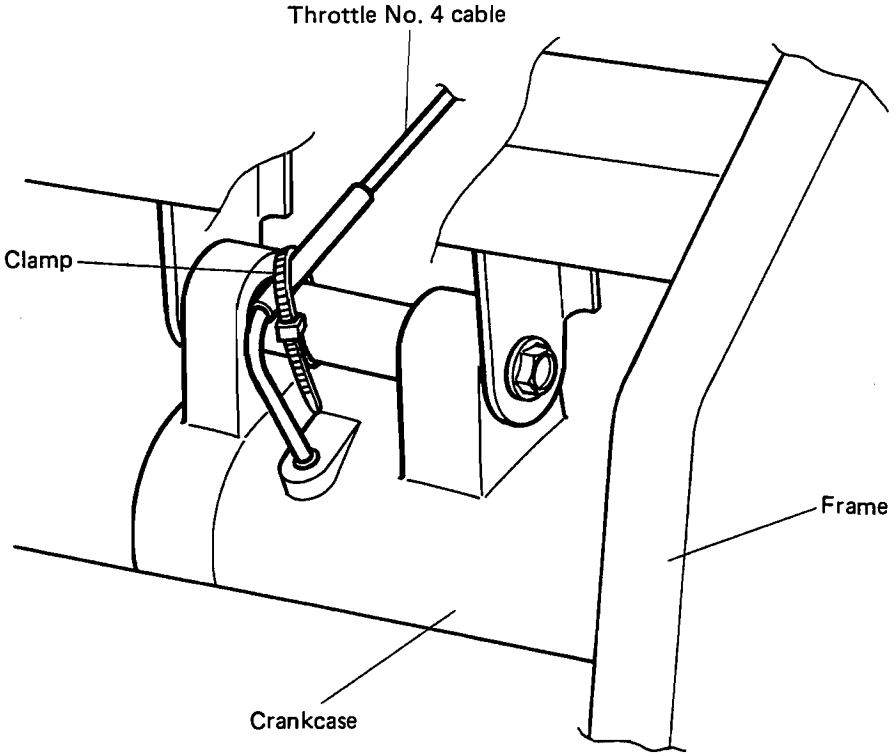

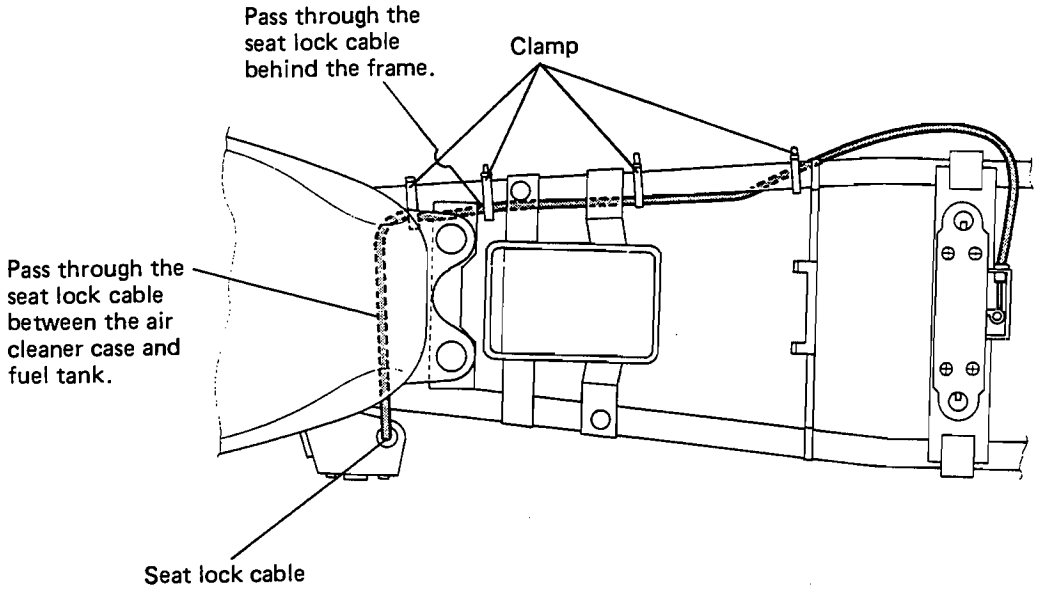

Downloaded from www.Manualslib.com manuals search engine

HOSE ROUTING
(GERMANY MODEL ONLY)

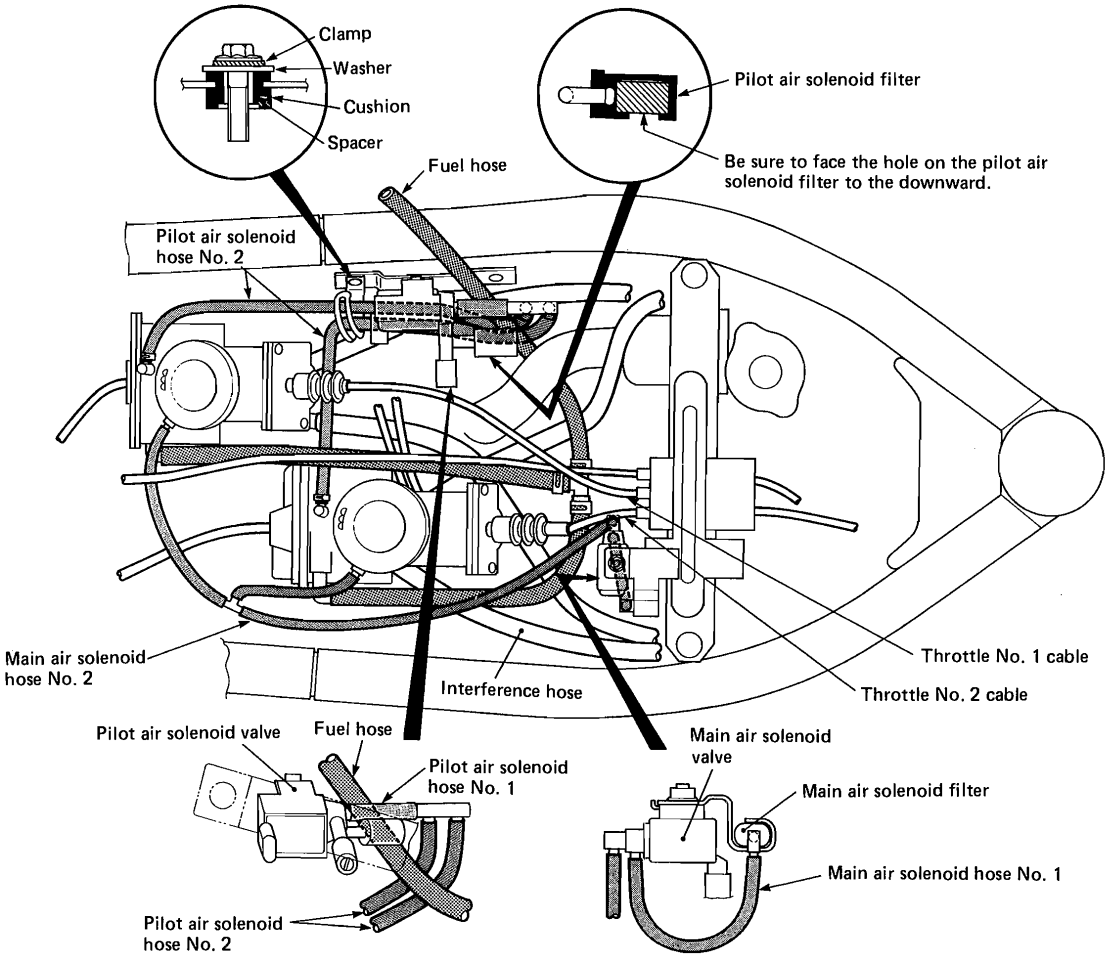

Downloaded from www.Manualslib.com manuals search engine

CAUTION:
Be careful not to make the wrong connection of hoses, otherwise piston seizuring may happen.

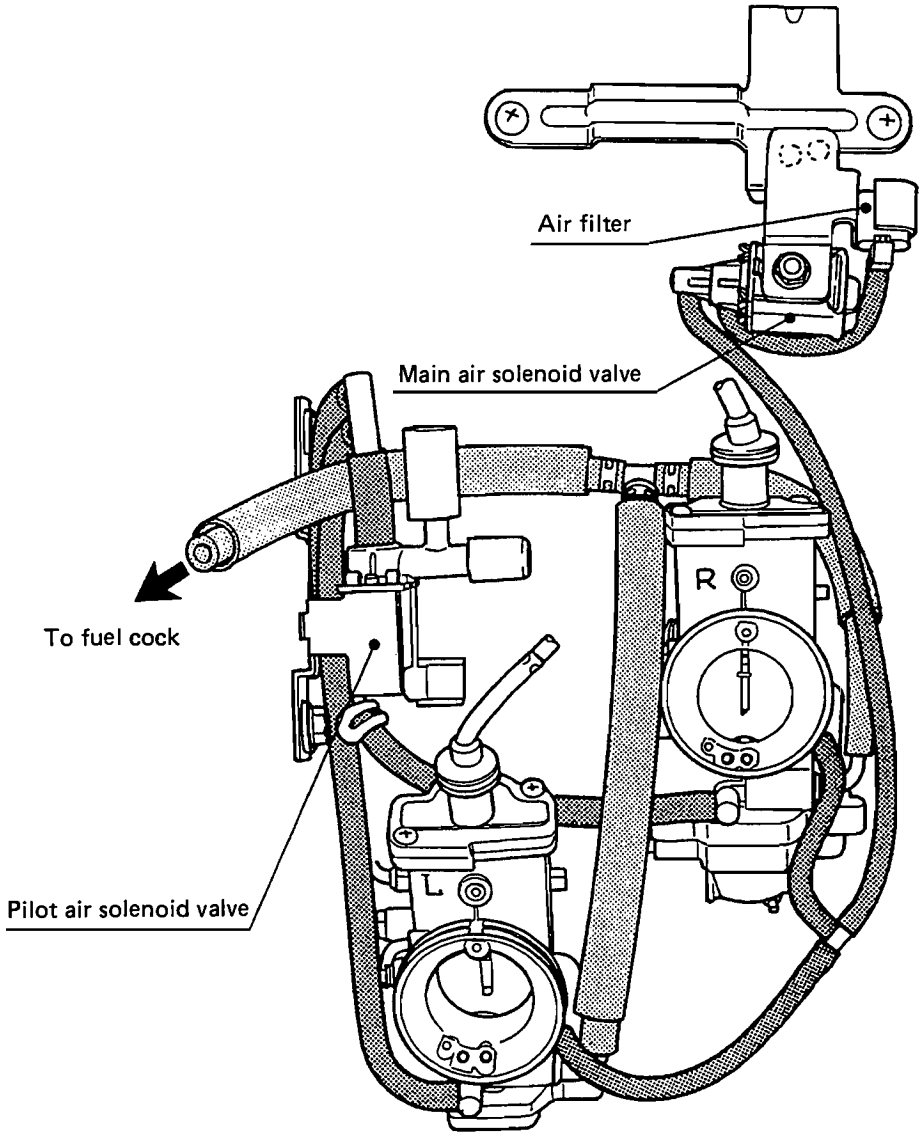

Downloaded from www.Manualslib.com manuals search engine

RGV250P ('93-MODEL)

CONTENTS

SPECIFICATIONS 12- 1
SERVICE DATA 12- 2

12

Downloaded from www.Manualslib.com manuals search engine

SPECIFICATIONS

DIMENSIONS AND DRY MASS

Overall length	1995 mm (78.5 in) ... E-02, 04, 21, 24, 34 2080 mm (81.9 in) ... E-22
Overall width	710 mm (27.9 in)
Overall height	1070 mm (42.1 in)
Wheelbase	1380 mm (54.3 in)
Ground clearance	125 mm (4.9 in)
Seat height	766 mm (30.2 in)
Dry mass	139 kg (306 lbs)

ENGINE

Type	Two-stroke, water-cooled, 90° V-twin
Number of cylinders	2
Bore	56.0 mm (2.205 in)
Stroke	50.6 mm (1.992 in)
Piston displacement	249 cm^3 (15.2 cu. in)
Corrected compression ratio	7.3 : 1
Carburetor	MIKUNI TM34SS
Air cleaner	Polyurethane foam element
Starter system	Primary kick
Lubrication system	SUZUKI CCI

TRANSMISSION

Clutch	Wet multi-plate type
Transmission	6-speed constant mesh
Gearshift pattern	1-down, 5-up
Primary reduction	2.565 (59/23)
Final reduction	3.071 (43/14)
Gear ratios, Low	2.454 (27/11)
2nd	1.625 (26/16)
3rd	1.235 (21/17)
4th	1.045 (23/22)
5th	0.916 (22/24)
Top	0.840 (21/25)
Drive chain	DID 520V2 or RK520SMOZ9 114 links

These specifications are subject to change without notice.

CHASSIS

Front suspension	Inverted telescopic, coil spring, oil damped, inner rod type, spring 5-way, adjustable.
Rear suspension	Link type system, gas/coil spring, oil damped, spring pre-load fully adjustable, extension damping force 4-way and compression damping force fully adjustable.
Steering angle	30° (right & left)
Caster	65°
Trail	94 mm (3.7 in)
Turning radius	3.1 m (10.2 ft)
Front brake	Disc brake, twin
Rear brake	Disc brake
Front tire size	110/70 R17 54H
Rear tire size	150/60 R17 66H
Front fork stroke	120 mm (4.7 in)
Rear wheel travel	130 mm (5.1 in)

ELECTRICAL

Ignition type	SUZUKI "PEI"
Ignition timing	10° B.T.D.C. at 1300 r/min
Spark plug	BR9ECM or W27 EMR-C
Battery	12V 10.8 kC (3Ah)/ 10 HR
Generator	Three-phase A.C. generator
Fuse	20/10/10/10A

CAPACITIES

Fuel tank	
including reserve	16 L (4.2/3.5 US/Imp gal)
reserve	3.5 L (0.9/0.8 US/Imp gal)
Engine oil	1.1 L (1.2/1.0 US/Imp qt)
Transmission	700 ml (23.7/24.6 US/Imp oz)
Coolant	1.9 L (2.0/1.7 US/Imp qt)
Front fork oil	429 ml (14.5/15.1 US/Imp oz)

Downloaded from www.Manualslib.com manuals search engine

SERVICE DATA

CYLINDER + PISTON + PISTON RING

Unit: mm (in)

ITEM	STANDARD			LIMIT
Piston to cylinder clearance	0.055–0.071 (0.0022–0.0028)			0.120 (0.0047)
Cylinder bore	56.000–56.023 (2.2047–2.2056)			Nicks or Scratches
Piston diam.	55.936–55.961 (2.2022–2.2032) Measure at 19 (0.7) from the skirt end			55.880 (2.199)
Cylinder distortion	——			0.05 (0.002)
Cylinder head distortion	——			0.05 (0.002)
Piston ring free end gap	1st & 2nd	T	Approx. 5.0 (0.19)	4.0 (0.15)
		T	Approx. 6.0 (0.24)	4.8 (0.19)
Piston ring end gap	1st & 2nd		0.15–0.30 (0.006–0.012)	0.70 (0.027)
Piston ring to groove clearance	1st & 2nd		0.02–0.06 (0.0008–0.0024)	——
Piston pin bore	16.002–16.010 (0.6300–0.6303)			16.036 (0.6313)
Piston pin O.D.	15.995–16.000 (0.6297–0.6299)			15.980 (0.6291)

CONROD + CRANKSHAFT

Unit: mm (in)

ITEM	STANDARD	LIMIT
Conrod small end I.D.	20.003–20.011 (0.7875–0.7878)	20.047 (0.7893)
Conrod deflection	——	3.0 (0.12)
Crank web to web width	$48.5^{+0.2}_{0}$ ($1.909^{+0.008}_{0}$)	——
Crankshaft runout	——	0.05 (0.002)

OIL PUMP

ITEM	SPECIFICATION
Oil pump reduction ratio	4.897 (59/23 x 27/11 x 21/27)
CCI pump discharge rate (Full open)	4.8–6.0 ml for 2 minutes at 2 000 r/min.

CLUTCH

Unit: mm (in)

ITEM	STANDARD	LIMIT
Clutch cable play	2–3 (0.08–0.12)	——
Drive plate thickness	2.99–3.01 (0.118–0.119)	2.69 (0.11)
Drive plate claw width	15.8–16.0 (0.62–0.63)	15.3 (0.60)

Downloaded from www.Manualslib.com manuals search engine

ITEM	STANDARD	LIMIT
Driven plate distortion	——	0.1 (0.004)
Clutch spring free length	——	34.8 (1.37)

THERMOSTAT + RADIATOR

ITEM	STANDARD	LIMIT
Thermostat valve opening temperature	50 ± 2°C	——
Thermostat valve lift	Over 7 mm at 65°C	——
Radiator cap valve opening pressure	110 kPa (1.1 kg/cm²)	——

TRANSMISSION

Unit: mm (in) Except ratio

ITEM	STANDARD		LIMIT
Primary reduction ratio	2.565 (59/23)		——
Final reduction ratio	3.071 (43/14)		——
Gear ratios	Low	2.454 (27/11)	——
	2nd	1.625 (26/16)	——
	3rd	1.235 (21/17)	——
	4th	1.045 (23/22)	——
	5th	0.916 (22/24)	——
	Top	0.840 (21/25)	——
Shift fork to groove clearance	0.1–0.3 (0.004–0.011)		0.5 (0.0196)
Shift fork groove width	No.1 & No.2	4.0–4.1 (0.157–0.161)	——
	No.3	5.5–5.6 (0.216–0.220)	——
Shift fork thickness	No.1 & No.2	3.8–3.9 (0.149–0.153)	——
	No.3	5.3–5.4 (0.208–0.212)	——

DRIVE CHAIN

ITEM	STANDARD		LIMIT
Drive chain	Type	D.I.D.: 520 V_2 TAKASAGO: 520SMOZ$_9$	——
	Links	114 links	——
	20-pitch length	——	319.4 (12.574)
Drive chain slack	25–35 (0.98–1.38)		——

CARBURETOR

ITEM	SPECIFICATION	
	E-02,04,21,24,34	E-22
Carburetor type	MIKUNI TM34SS	←
Bore size	34 mm (1.34 in)	←
I.D. No.	22D2	22D7

Downloaded from www.Manualslib.com manuals search engine

ITEM		SPECIFICATION	
		E-02,04,21,24,34	E-22
Idle r/min.		1 300±150 r/min	1 300±100 r/min
Fuel level		7.1±0.5 mm (0.28±0.02 in)	←
Float height		8±1.0 mm (0.31±0.04 in)	←
Main jet	(M.J.)	L: #270, R: #280	←
Jet needle	(J.N.)	6GH8-55-3	6FL89-55-3
Needle jet	(N.J.)	O−8	O−7
Cut-away	(C.A.)	1.5 mm	←
Pilot jet	(P.J.)	#27.5	#22.5
By-pass	(B.P.)	0.6 mm	——
Pilot outlet	(P.O.)	0.6 mm	1.0 mm
Valve seat	(V.S.)	2.5 mm	←
Starter jet	(G.S.)	#45	←
Power jet	No.1	L: #55, R: #35	L: #45, R: #35
Power jet	No.2	0.7 mm	←
Air screw	(A.S.)	——	1-¼ turns out
Throttle cable play		0.5−1.0 mm (0.02−0.04 in)	←

ELECTRICAL

Unit: mm (in)

ITEM	SPECIFICATION		NOTE
Ignition timing	10° B.T.D.C. at 1 300 r/min.		
Spark plug	Type	NGK BR9ECM ND W27EMR-C	
	Gap	0.7−0.8	
Spark performance	Over 8 (0.3) at 1 atm.		
Ignition coil resistance	Primary	B/Y−W/L 0.17−0.23 Ω	
	Secondary	Plug cap − Terminal 15−20 kΩ	
Generator coil resistance	Y−Y 0.4−0.6 Ω		
Magneto coil resistance	Pick up coil	Br−B 80−120 Ω	
		R−W 80−120 Ω	
Generator no-load voltage	More than 49 V (AC) at 5 000 r/min.		Y−Y
Regulated voltage	13.0−15.5 V at 5 000 r/min.		
Water temperature gauge resistance	189−260 Ω at 50°C		
	24−28 Ω at 115°C		
Battery	Type designation	YT4L-BS	
	Capacity	12V 10.8 kC (3Ah)/10HR	
	Standard electrolyte S.G.	1.32 at 20°C (68°F)	

Downloaded from www.Manualslib.com manuals search engine

ITEM	SPECIFICATION		NOTE
Fuse size	Main	20A	
	Ignition	10A	
	Head	10A	
	Tail	10A	

WATTAGE

Unit: W

ITEM		SPECIFICATION
Headlight	HI	60
	LO	55
Tail/Brake light		5/21
Turn signal light		21
Tachometer light		3
Speedometer light		3
Turn signal indicator light		2
High beam indicator light		2
Neutral indicator light		2
Oil level warning light		2
Parking or city light		4
Water temp. meter light		1.7

BRAKE + WHEEL

Unit: mm (in)

ITEM	STANDARD		LIMIT
Rear brake pedal height	60–70 (2.36–2.76)		——
Brake disc thickness	Front	4.3–4.7 (0.17–0.18)	4.0 (0.16)
	Rear	4.8–5.1 (0.19–0.20)	4.5 (0.18)
Brake disc runout	——		0.3 (0.01)
Master cylinder bore	Front	15.870–15.913 (0.6248–0.6264)	——
	Rear	12.700–12.743 (0.4999–0.5016)	——
Master cylinder piston	Front	15.827–15.854 (0.6231–0.6241)	——
	Rear	12.657–12.684 (0.4983–0.4993)	——
Brake caliper cylinder bore	Front	30.230–30.300 (1.1901–1.1929) 33.960–34.030 (1.3370–1.3397)	——
	Rear	24.000–24.076 (0.9449–0.9479)	——
Brake caliper piston diam.	Front	30.160–30.200 (1.1873–1.1889) 33.897–33.930 (1.3345–1.3358)	——
	Rear	23.950–24.000 (0.9429–0.9449)	——

Downloaded from www.Manualslib.com manuals search engine

ITEM	STANDARD		LIMIT
Wheel rim runout	Axial	——	2.0 (0.08)
	Radial	——	2.0 (0.08)
Wheel axle runout	Front	——	0.25 (0.010)
	Rear	——	0.25 (0.010)
Tire size	Front	110/70 R17 54H	——
	Rear	150/60 R17 66H	——
Tire tread depth	Front	——	1.6 (0.06)
	Rear	——	2.0 (0.08)

SUSPENSION

Unit: mm (in)

ITEM	STANDARD	LIMIT	NOTE
Front fork stroke	120 (4.7)	——	
Front fork spring free length	——	330 (13.0)	
Front fork oil level	109 (4.29)	——	
Rear wheel travel	130 (5.1)	——	
Swingarm pivot shaft runout	——	0.3	

FUEL + OIL + COOLANT

ITEM	SPECIFICATION		NOTE
Fuel type	The gasoline used should be graded 85 to 95 octane in Research Method and should be unleaded type where they are available.		
Fuel tank including reserve	16 L (4.2/3.5 US/Imp gal)		
reserve	3.5 L (0.9/0.8 US/Imp gal)		
Engine oil type	SUZUKI CCI or CCI SUPER OIL		
Engine oil tank capacity	1.1 L (1.2/1.0 US/Imp qt)		
Transmission oil type	SAE 10W/40		
Transmission oil capacity	Change	700 ml (23.6/24.6 US/Imp oz)	
	Overhaul	800 ml (27.0/28.1 US/Imp oz)	
Front fork oil type	Fork oil #10		
Front fork oil capacity (each leg)	429 ml (14.5/15.1 US/Imp oz)		
Brake fluid type	DOT4		

Downloaded from www.Manualslib.com manuals search engine

ITEM	SPECIFICATION	NOTE
Coolant type	Use an anti-freeze & Summer coolant compatible with aluminum radiator, mixed with distilled water only, at the ratio of 50 : 50.	
Radiator including reserve	1 900 ml (2.0/1.7 US/Imp qt)	

TIRE PRESSURE

COLD INFLATION TIRE PRESSURE	NORMAL RIDING					
	SOLO RIDING			DUAL RIDING		
	kPa	kg/cm²	psi	kPa	kg/cm²	psi
FRONT	200	2.00	29	200	2.00	29
REAR	225	2.25	33	250	2.50	36

Downloaded from www.Manualslib.com manuals search engine

RGV250R ('94-MODEL)

CONTENTS

SPECIFICATIONS 13- 1
SERVICE DATA 13- 2
WIRING DIAGRAM 13- 8
HOSE ROUTING 13- 9

Downloaded from www.Manualslib.com manuals search engine

SPECIFICATIONS

DIMENSIONS AND DRY MASS

Overall length	1995 mm (78.5 in) ... E-02, 04, 21, 24, 34
Overall width	710 mm (27.9 in)
Overall height	1070 mm (42.1 in)
Wheelbase	1380 mm (54.3 in)
Ground clearance	125 mm (4.9 in)
Seat height	766 mm (30.2 in)
Dry mass	139 kg (306 lbs)

ENGINE

Type	Two-stroke, water-cooled, 90° V-twin
Number of cylinders	2
Bore	56.0 mm (2.205 in)
Stroke	50.6 mm (1.992 in)
Piston displacement	249 cm^3 (15.2 cu. in)
Corrected compression ratio	7.3 : 1
Carburetor	MIKUNI TM34SS
Air cleaner	Polyurethane foam element
Starter system	Primary kick
Lubrication system	SUZUKI CCI

TRANSMISSION

Clutch	Wet multi-plate type
Transmission	6-speed constant mesh
Gearshift pattern	1-down, 5-up
Primary reduction	2.565 (59/23)
Final reduction	3.071 (43/14)
Gear ratios, Low	2.454 (27/11)
2nd	1.625 (26/16)
3rd	1.235 (21/17)
4th	1.045 (23/22)
5th	0.916 (22/24)
Top	0.840 (21/25)
Drive chain	DID 520V2 or RK520SMOZ9 114 links

These specifications are subject to change without notice.

CHASSIS

Front suspension	Inverted telescopic, coil spring, oil damped, inner rod type, spring 5-way, adjustable.
Rear suspension	Link type system, gas/coil spring, oil damped, spring pre-load fully adjustable, extension damping force 4-way and compression damping force fully adjustable.
Steering angle	30° (right & left)
Caster	65°
Trail	94 mm (3.7 in)
Turning radius	3.1 m (10.2 ft)
Front brake	Disc brake, twin
Rear brake	Disc brake
Front tire size	110/70 R17 54H
Rear tire size	150/60 R17 66H
Front fork stroke	120 mm (4.7 in)
Rear wheel travel	130 mm (5.1 in)

ELECTRICAL

Ignition type	SUZUKI "PEI"
Ignition timing	10° B.T.D.C. at 1300 r/min
Spark plug	BR9ECM or W27 EMR-C
Battery	12V 10.8 kC (3Ah)/ 10 HR
Generator	Three-phase A.C. generator
Fuse	20/10/10/10A

CAPACITIES

Fuel tank	
including reserve	16 L (4.2/3.5 US/Imp gal)
reserve	3.5 L (0.9/0.8 US/Imp gal)
Engine oil	1.1 L (1.2/1.0 US/Imp qt)
Transmission	700 ml (23.7/24.6 US/Imp oz)
Coolant	1.9 L (2.0/1.7 US/Imp qt)
Front fork oil	429 ml (14.5/15.1 US/Imp oz)

Downloaded from www.Manualslib.com manuals search engine

SERVICE DATA

CYLINDER + PISTON + PISTON RING

Unit: mm (in)

ITEM	STANDARD			LIMIT
Piston to cylinder clearance	0.055—0.071 (0.0022—0.0028)			0.120 (0.0047)
Cylinder bore	56.000—56.023 (2.2047—2.2056)			Nicks or Scratches
Piston diam.	55.936—55.961 (2.2022—2.2032) Measure at 19 (0.7) from the skirt end			55.880 (2.199)
Cylinder distortion	——			0.05 (0.002)
Cylinder head distortion	——			0.05 (0.002)
Piston ring free end gap	1st & 2nd	T	Approx. 5.0 (0.19)	4.0 (0.15)
		T	Approx. 6.0 (0.24)	4.8 (0.19)
Piston ring end gap	1st & 2nd		0.15—0.30 (0.006—0.012)	0.70 (0.027)
Piston ring to groove clearance	1st & 2nd		0.02—0.06 (0.0008—0.0024)	——
Piston pin bore	16.002—16.010 (0.6300—0.6303)			16.036 (0.6313)
Piston pin O.D.	15.995—16.000 (0.6297—0.6299)			15.980 (0.6291)

CONROD + CRANKSHAFT

Unit: mm (in)

ITEM	STANDARD	LIMIT
Conrod small end I.D.	20.003—20.011 (0.7875—0.7878)	20.047 (0.7893)
Conrod deflection	——	3.0 (0.12)
Crank web to web width	$48.5^{+0.2}_{0}$ ($1.909^{+0.008}_{0}$)	——
Crankshaft runout	——	0.05 (0.002)

OIL PUMP

ITEM	SPECIFICATION
Oil pump reduction ratio	4.897 (59/23 x 27/11 x 21/27)
CCI pump discharge rate (Full open)	4.8—6.0 ml for 2 minutes at 2 000 r/min.

CLUTCH

Unit: mm (in)

ITEM	STANDARD	LIMIT
Clutch lever play	10—15 (0.4—0.6)	——
Drive plate thickness	2.99—3.01 (0.118—0.119)	2.69 (0.11)
Drive plate claw width	15.8—16.0 (0.62—0.63)	15.3 (0.60)

Downloaded from www.Manualslib.com manuals search engine

ITEM	STANDARD	LIMIT
Driven plate distortion	——	0.1 (0.004)
Clutch spring free length	——	34.8 (1.37)

THERMOSTAT + RADIATOR

ITEM	STANDARD	LIMIT
Thermostat valve opening temperature	50 ± 2°C	——
Thermostat valve lift	Over 7 mm at 65°C	——
Radiator cap valve opening pressure	110 kPa (1.1 kg/cm²)	——

TRANSMISSION

Unit: mm (in) Except ratio

ITEM	STANDARD		LIMIT
Primary reduction ratio	2.565 (59/23)		——
Final reduction ratio	3.071 (43/14)		——
Gear ratios	Low	2.454 (27/11)	——
	2nd	1.625 (26/16)	——
	3rd	1.235 (21/17)	——
	4th	1.045 (23/22)	——
	5th	0.916 (22/24)	——
	Top	0.840 (21/25)	——
Shift fork to groove clearance	0.1—0.3 (0.004—0.011)		0.5 (0.0196)
Shift fork groove width	No.1 & No.2	4.0—4.1 (0.157—0.161)	——
	No.3	5.5—5.6 (0.216—0.220)	——
Shift fork thickness	No.1 & No.2	3.8—3.9 (0.149—0.153)	——
	No.3	5.3—5.4 (0.208—0.212)	——

DRIVE CHAIN

ITEM	STANDARD		LIMIT
Drive chain	Type	D.I.D.: 520 V_2 TAKASAGO: 520SMOZ$_9$	——
	Links	114 links	——
	20-pitch length	——	319.4 (12.574)
Drive chain slack	25—35 (0.98—1.38)		——

CARBURETOR

ITEM	SPECIFICATION
	E-02,04,21,24,34
Carburetor type	MIKUNI TM34SS
Bore size	34 mm (1.34 in)
I.D. No.	22D2

Downloaded from www.Manualslib.com manuals search engine

ITEM		SPECIFICATION
		E-02,04,21,24,34
Idle r/min.		1 300±150 r/min
Fuel level		7.1±0.5 mm (0.28±0.02 in)
Float height		8±1.0 mm (0.31±0.04 in)
Main jet	(M.J.)	L: #270, R: #280
Jet needle	(J.N.)	6GH8-55-3
Needle jet	(N.J.)	O–8
Cut-away	(C.A.)	1.5 mm
Pilot jet	(P.J.)	#27.5
By-pass	(B.P.)	0.6 mm
Pilot outlet	(P.O.)	0.6 mm
Valve seat	(V.S.)	2.5 mm
Starter jet	(G.S.)	#45
Power jet	No.1	L: #55, R: #35
Power jet	No.2	0.7 mm
Air screw	(A.S.)	——
Throttle cable play		3.0–6.0 mm (0.12–0.24 in)

ELECTRICAL

Unit: mm (in)

ITEM	SPECIFICATION		NOTE
Ignition timing	10° B.T.D.C. at 1 300 r/min.		
Spark plug	Type	NGK BR9ECM ND W27EMR-C	
	Gap	0.7–0.8	
Spark performance	Over 8 (0.3) at 1 atm.		
Ignition coil resistance	Primary	B/Y–W/L 0.17–0.23 Ω	
	Secondary	Plug cap – Terminal 15–20 kΩ	
Generator coil resistance	Y–Y 0.4–0.6 Ω		
Magneto coil resistance	Pick up coil	Br–B 80–120 Ω	
		R–W 80–120 Ω	
Generator no-load voltage	More than 49 V (AC) at 5 000 r/min.		Y–Y
Regulated voltage	13.0–15.5 V at 5 000 r/min.		
Water temperature gauge resistance	189–260 Ω at 50°C		
	24–28 Ω at 115°C		
Battery	Type designation	YT4L-BS	
	Capacity	12V 10.8 kC (3Ah)/10HR	
	Standard electrolyte S.G.	1.32 at 20°C (68°F)	

Downloaded from www.Manualslib.com manuals search engine

ITEM	SPECIFICATION		NOTE
Fuse size	Main	20A	
	Ignition	10A	
	Head	10A	
	Tail	10A	

WATTAGE

Unit: W

ITEM		SPECIFICATION
Headlight	HI	60
	LO	55
Tail/Brake light		5/21
Turn signal light		21
Tachometer light		3
Speedometer light		3
Turn signal indicator light		2
High beam indicator light		2
Neutral indicator light		2
Oil level warning light		2
Parking or city light		4
Water temp. meter light		1.7

BRAKE + WHEEL

Unit: mm (in)

ITEM	STANDARD		LIMIT
Rear brake pedal height	60–70 (2.36–2.76)		——
Brake disc thickness	Front	4.3–4.7 (0.17–0.18)	4.0 (0.16)
	Rear	4.8–5.1 (0.19–0.20)	4.5 (0.18)
Brake disc runout	——		0.3 (0.01)
Master cylinder bore	Front	15.870–15.913 (0.6248–0.6264)	——
	Rear	12.700–12.743 (0.4999–0.5016)	——
Master cylinder piston	Front	15.827–15.854 (0.6231–0.6241)	——
	Rear	12.657–12.684 (0.4983–0.4993)	——
Brake caliper cylinder bore	Front	30.230–30.300 (1.1901–1.1929) 33.960–34.030 (1.3370–1.3397)	——
	Rear	24.000–24.076 (0.9449–0.9479)	——
Brake caliper piston diam.	Front	30.160–30.200 (1.1873–1.1889) 33.897–33.930 (1.3345–1.3358)	——
	Rear	23.950–24.000 (0.9429–0.9449)	——

Downloaded from www.Manualslib.com manuals search engine

ITEM	STANDARD		LIMIT
Wheel rim runout	Axial	——	2.0 (0.08)
	Radial	——	2.0 (0.08)
Wheel axle runout	Front	——	0.25 (0.010)
	Rear	——	0.25 (0.010)
Tire size	Front	110/70 R17 54H	——
	Rear	150/60 R17 66H	——
Tire tread depth	Front	——	1.6 (0.06)
	Rear	——	2.0 (0.08)

SUSPENSION

Unit: mm (in)

ITEM	STANDARD	LIMIT	NOTE
Front fork stroke	120 (4.7)	——	
Front fork spring free length	——	330 (13.0)	
Front fork oil level	109 (4.29)	——	
Rear wheel travel	130 (5.1)	——	
Swingarm pivot shaft runout	——	0.3	

FUEL + OIL + COOLANT

ITEM	SPECIFICATION		NOTE
Fuel type	The gasoline used should be graded 85 to 95 octane in Research Method and should be unleaded type where they are available.		
Fuel tank including reserve	16 L (4.2/3.5 US/Imp gal)		
reserve	3.5 L (0.9/0.8 US/Imp gal)		
Engine oil type	SUZUKI CCI or CCI SUPER OIL		
Engine oil tank capacity	1.1 L (1.2/1.0 US/Imp qt)		
Transmission oil type	SAE 10W/40		
Transmission oil capacity	Change	700 ml (23.6/24.6 US/Imp oz)	
	Overhaul	800 ml (27.0/28.1 US/Imp oz)	
Front fork oil type	Fork oil #10		
Front fork oil capacity (each leg)	429 ml (14.5/15.1 US/Imp oz)		
Brake fluid type	DOT4		

Downloaded from www.Manualslib.com manuals search engine

ITEM	SPECIFICATION	NOTE
Coolant type	Use an anti-freeze & Summer coolant compatible with aluminum radiator, mixed with distilled water only, at the ratio of 50 : 50.	
Radiator including reserve	1 900 ml (2.0/1.7 US/Imp qt)	

TIRE PRESSURE

COLD INFLATION TIRE PRESSURE	NORMAL RIDING					
	SOLO RIDING			DUAL RIDING		
	kPa	kg/cm²	psi	kPa	kg/cm²	psi
FRONT	200	2.00	29	200	2.00	29
REAR	225	2.25	33	250	2.50	36

Downloaded from www.Manualslib.com manuals search engine

SP : SPEEDOMETER LIGHT
TA : TACHOMETER LIGHT
TEMP : WATER TEMP. METER LIGHT
HI : HIGH BEAM INDICATOR LIGHT
NU : NEUTRAL INDICATOR LIGHT
TU : TURN SIGNAL INDICATOR LIGHT
OIL : OIL LEVEL INDICATOR LIGHT

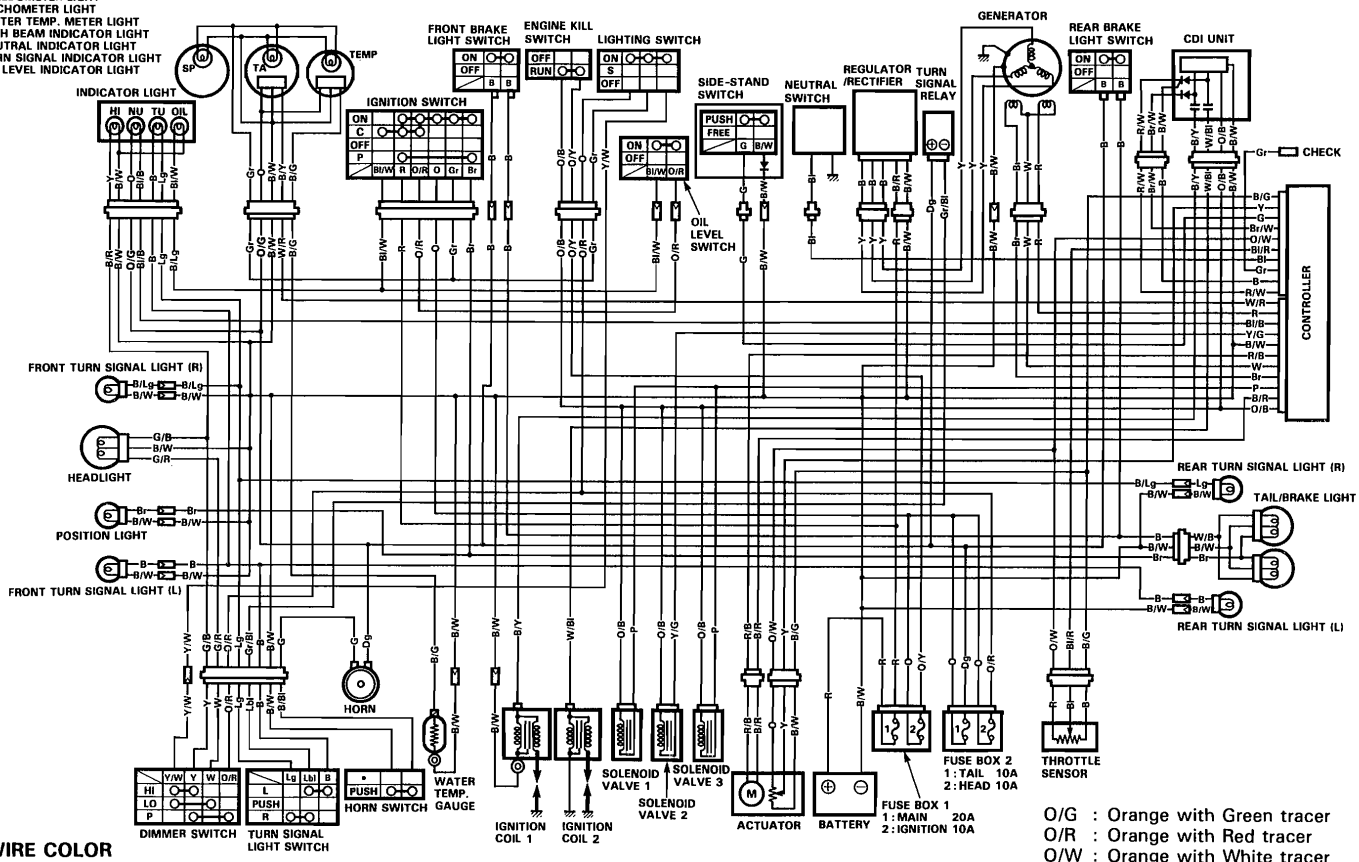

WIRE COLOR

B	: Black	Lg	: Light green	B/Bl	: Black with Blue tracer	Bl/R	: Blue with Red tracer	O/G	: Orange with Green tracer
Bl	: Blue	O	: Orange	B/Lg	: Black with Light green tracer	Bl/W	: Blue with White tracer	O/R	: Orange with Red tracer
Br	: Brown	P	: Pink	B/G	: Black with Green tracer	Br/W	: Brown with White tracer	O/W	: Orange with White tracer
Dg	: Dark green	R	: Red	B/R	: Black with Red tracer	G/B	: Green with Black tracer	O/Y	: Orange with Yellow tracer
G	: Green	W	: White	B/W	: Black with White tracer	G/R	: Green with Red tracer	R/B	: Red with Black tracer
Gr	: Gray	Y	: Yellow	B/Y	: Black with Yellow tracer	Gr/Bl	: Gray with Blue tracer	R/W	: Red with White tracer
Lbl	: Light blue			Bl/B	: Blue with Black tracer	O/B	: Orange with Black tracer	W/B	: White with Black tracer
								W/Bl	: White with Blue tracer
								W/R	: White with Red tracer
								Y/G	: Yellow with Green tracer

Downloaded from www.Manualslib.com manuals search engine

HOSE ROUTING

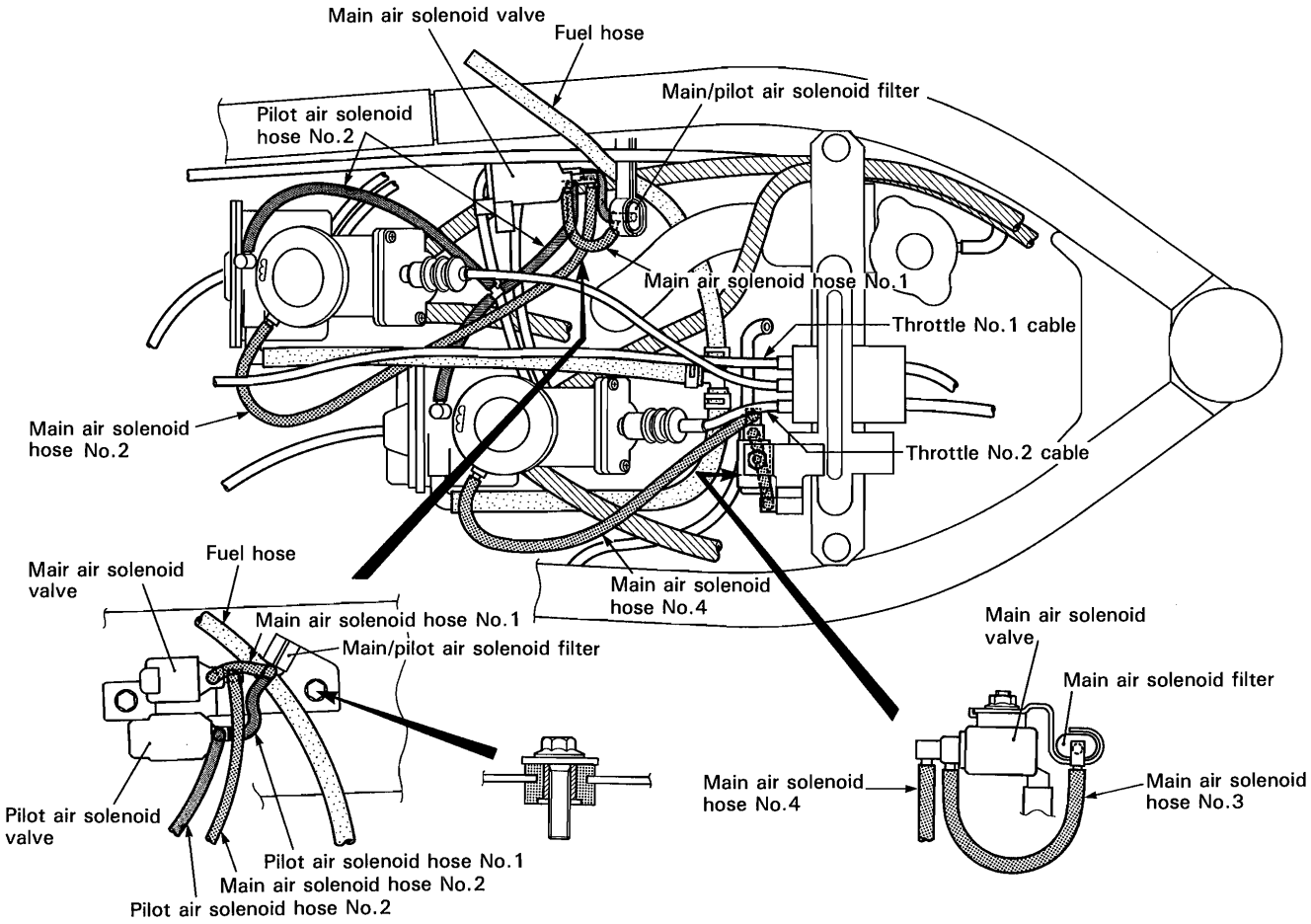

Downloaded from www.Manualslib.com manuals search engine

RGV250T ('96-MODELL)

CONTENTS

SPECIFICATIONS 14- 1
SERVICE DATA 14- 2

NOTE:
The specifications and service data are the same as those of the R-MODEL.

Downloaded from www.Manualslib.com manuals search engine

SPECIFICATIONS

DIMENSIONS AND DRY MASS

Overall length	1995 mm (78.5 in)
Overall width	710 mm (27.9 in)
Overall height	1070 mm (42.1 in)
Wheelbase	1380 mm (54.3 in)
Ground clearance	125 mm (4.9 in)
Seat height	766 mm (30.2 in)
Dry mass	139 kg (306 lbs)

ENGINE

Type	Two-stroke, water-cooled, 90° V-twin
Number of cylinders	2
Bore	56.0 mm (2.205 in)
Stroke	50.6 mm (1.992 in)
Piston displacement	249 cm^3 (15.2 cu. in)
Corrected compression ratio	7.3 : 1
Carburetor	MIKUNI TM34SS
Air cleaner	Polyurethane foam element
Starter system	Primary kick
Lubrication system	SUZUKI CCI

TRANSMISSION

Clutch	Wet multi-plate type
Transmission	6-speed constant mesh
Gearshift pattern	1-down, 5-up
Primary reduction	2.565 (59/23)
Final reduction	3.071 (43/14)
Gear ratios, Low	2.454 (27/11)
2nd	1.625 (26/16)
3rd	1.235 (21/17)
4th	1.045 (23/22)
5th	0.916 (22/24)
Top	0.840 (21/25)
Drive chain	DID 520V_2 or RK520SMOZ$_9$ 114 links

These specifications are subject to change without notice.

CHASSIS

Front suspension	Inverted telescopic, coil spring, oil damped, inner rod type, spring 5-way, adjustable.
Rear suspension	Link type system, gas/coil spring, oil damped, spring pre-load fully adjustable, extension damping force 4-way and compression damping force fully adjustable.
Steering angle	30° (right & left)
Caster	65°
Trail	94 mm (3.7 in)
Turning radius	3.1 m (10.2 ft)
Front brake	Disc brake, twin
Rear brake	Disc brake
Front tire size	110/70 R17 54H
Rear tire size	150/60 R17 66H
Front fork stroke	120 mm (4.7 in)
Rear wheel travel	130 mm (5.1 in)

ELECTRICAL

Ignition type	SUZUKI "PEI"
Ignition timing	10° B.T.D.C. at 1300 r/min
Spark plug	BR9ECM or W27 EMR-C
Battery	12V 10.8 kC (3Ah)/ 10 HR
Generator	Three-phase A.C. generator
Fuse	20/10/10/10A

CAPACITIES

Fuel tank	
including reserve	16 L (4.2/3.5 US/Imp gal)
reserve	3.5 L (0.9/0.8 US/Imp gal)
Engine oil	1.1 L (1.2/1.0 US/Imp qt)
Transmission	700 ml (23.7/24.6 US/Imp oz)
Coolant	1.9 L (2.0/1.7 US/Imp qt)
Front fork oil	429 ml (14.5/15.1 US/Imp oz)

Downloaded from www.Manualslib.com manuals search engine

SERVICE DATA

CYLINDER + PISTON + PISTON RING

Unit: mm (in)

ITEM	STANDARD			LIMIT
Piston to cylinder clearance	0.055–0.071 (0.0022–0.0028)			0.120 (0.0047)
Cylinder bore	56.000–56.023 (2.2047–2.2056)			Nicks or Scratches
Piston diam.	55.936–55.961 (2.2022–2.2032) Measure at 19 (0.7) from the skirt end			55.880 (2.199)
Cylinder distortion	——			0.05 (0.002)
Cylinder head distortion	——			0.05 (0.002)
Piston ring free end gap	1st & 2nd	T	Approx. 5.0 (0.19)	4.0 (0.15)
		T	Approx. 6.0 (0.24)	4.8 (0.19)
Piston ring end gap	1st & 2nd		0.15–0.30 (0.006–0.012)	0.70 (0.027)
Piston ring to groove clearance	1st & 2nd		0.02–0.06 (0.0008–0.0024)	——
Piston pin bore	16.002–16.010 (0.6300–0.6303)			16.036 (0.6313)
Piston pin O.D.	15.995–16.000 (0.6297–0.6299)			15.980 (0.6291)

CONROD + CRANKSHAFT

Unit: mm (in)

ITEM	STANDARD	LIMIT
Conrod small end I.D.	20.003–20.011 (0.7875–0.7878)	20.047 (0.7893)
Conrod deflection	——	3.0 (0.12)
Crank web to web width	$48.5^{+0.2}_{0}$ ($1.909^{+0.008}_{0}$)	——
Crankshaft runout	——	0.05 (0.002)

OIL PUMP

ITEM	SPECIFICATION
Oil pump reduction ratio	4.897 (59/23 x 27/11 x 21/27)
CCI pump discharge rate (Full open)	4.8–6.0 ml for 2 minutes at 2 000 r/min.

CLUTCH

Unit: mm (in)

ITEM	STANDARD	LIMIT
Clutch lever play	10–15 (0.4–0.6)	——
Drive plate thickness	2.99–3.01 (0.118–0.119)	2.69 (0.11)
Drive plate claw width	15.8–16.0 (0.62–0.63)	15.3 (0.60)

Downloaded from www.Manualslib.com manuals search engine

ITEM	STANDARD	LIMIT
Driven plate distortion	——	0.1 (0.004)
Clutch spring free length	——	34.8 (1.37)

THERMOSTAT + RADIATOR

ITEM	STANDARD	LIMIT
Thermostat valve opening temperature	50 ± 2°C	——
Thermostat valve lift	Over 7 mm at 65°C	——
Radiator cap valve opening pressure	110 kPa (1.1 kg/cm²)	——

TRANSMISSION

Unit: mm (in) Except ratio

ITEM	STANDARD		LIMIT
Primary reduction ratio	2.565 (59/23)		——
Final reduction ratio	3.071 (43/14)		——
Gear ratios	Low	2.454 (27/11)	——
	2nd	1.625 (26/16)	——
	3rd	1.235 (21/17)	——
	4th	1.045 (23/22)	——
	5th	0.916 (22/24)	——
	Top	0.840 (21/25)	——
Shift fork to groove clearance	0.1—0.3 (0.004—0.011)		0.5 (0.0196)
Shift fork groove width	No.1 & No.2	4.0—4.1 (0.157—0.161)	——
	No.3	5.5—5.6 (0.216—0.220)	——
Shift fork thickness	No.1 & No.2	3.8—3.9 (0.149—0.153)	——
	No.3	5.3—5.4 (0.208—0.212)	——

DRIVE CHAIN

ITEM	STANDARD		LIMIT
Drive chain	Type	D.I.D.: 520 V_2 TAKASAGO: 520SMOZ$_9$	——
	Links	114 links	——
	20-pitch length	——	319.4 (12.574)
Drive chain slack	25—35 (0.98—1.38)		——

CARBURETOR

ITEM	SPECIFICATION
Carburetor type	MIKUNI TM34SS
Bore size	34 mm (1.34 in)
I.D. No.	22D2

Downloaded from www.Manualslib.com manuals search engine

ITEM		SPECIFICATION
Idle r/min.		1 300±150 r/min
Fuel level		7.1±0.5 mm (0.28±0.02 in)
Float height		8±1.0 mm (0.31±0.04 in)
Main jet	(M.J.)	L: #270, R: #280
Jet needle	(J.N.)	6GH8-55-3
Needle jet	(N.J.)	O–8
Cut-away	(C.A.)	1.5 mm
Pilot jet	(P.J.)	#27.5
By-pass	(B.P.)	0.6 mm
Pilot outlet	(P.O.)	0.6 mm
Valve seat	(V.S.)	2.5 mm
Starter jet	(G.S.)	#45
Power jet	No.1	L: #55, R: #35
Power jet	No.2	0.7 mm
Air screw	(A.S.)	——
Throttle cable play		3.0–6.0 mm (0.12–0.24 in)

ELECTRICAL

Unit: mm (in)

ITEM		SPECIFICATION	NOTE
Ignition timing		10° B.T.D.C. at 1 300 r/min.	
Spark plug	Type	NGK BR9ECM ND W27EMR-C	
	Gap	0.7–0.8	
Spark performance		Over 8 (0.3) at 1 atm.	
Ignition coil resistance	Primary	B/Y–W/L 0.17–0.23 Ω	
	Secondary	Plug cap – Terminal 15–20 kΩ	
Generator coil resistance		Y–Y 0.4–0.6 Ω	
Magneto coil resistance	Pick up coil	Br–B 80–120 Ω	
		R–W 80–120 Ω	
Generator no-load voltage		More than 49 V (AC) at 5 000 r/min.	Y–Y
Regulated voltage		13.0–15.5 V at 5 000 r/min.	
Water temperature gauge resistance		189–260 Ω at 50°C	
		24–28 Ω at 115°C	
Battery	Type designation	YT4L-BS	
	Capacity	12V 10.8 kC (3Ah)/10HR	
	Standard electrolyte S.G.	1.32 at 20°C (68°F)	

Downloaded from www.Manualslib.com manuals search engine

ITEM	SPECIFICATION		NOTE
Fuse size	Main	20A	
	Ignition	10A	
	Head	10A	
	Tail	10A	

WATTAGE

Unit: W

ITEM		SPECIFICATION
Headlight	HI	60
	LO	55
Tail/Brake light		5/21
Turn signal light		21
Tachometer light		3
Speedometer light		3
Turn signal indicator light		2
High beam indicator light		2
Neutral indicator light		2
Oil level warning light		2
Water temp. meter light		1.7

BRAKE + WHEEL

Unit: mm (in)

ITEM	STANDARD		LIMIT
Rear brake pedal height	60–70 (2.36–2.76)		——
Brake disc thickness	Front	4.3–4.7 (0.17–0.18)	4.0 (0.16)
	Rear	4.8–5.1 (0.19–0.20)	4.5 (0.18)
Brake disc runout	——		0.3 (0.01)
Master cylinder bore	Front	15.870–15.913 (0.6248–0.6264)	——
	Rear	12.700–12.743 (0.4999–0.5016)	——
Master cylinder piston	Front	15.827–15.854 (0.6231–0.6241)	——
	Rear	12.657–12.684 (0.4983–0.4993)	——
Brake caliper cylinder bore	Front	30.230–30.300 (1.1901–1.1929) 33.960–34.030 (1.3370–1.3397)	——
	Rear	24.000–24.076 (0.9449–0.9479)	——
Brake caliper piston diam.	Front	30.160–30.200 (1.1873–1.1889) 33.897–33.930 (1.3345–1.3358)	——
	Rear	23.950–24.000 (0.9429–0.9449)	——

Downloaded from www.Manualslib.com manuals search engine

ITEM	STANDARD		LIMIT
Wheel rim runout	Axial	——	2.0 (0.08)
	Radial	——	2.0 (0.08)
Wheel axle runout	Front	——	0.25 (0.010)
	Rear	——	0.25 (0.010)
Tire size	Front	110/70 R17 54H	——
	Rear	150/60 R17 66H	——
Tire tread depth	Front	——	1.6 (0.06)
	Rear	——	2.0 (0.08)

SUSPENSION

Unit: mm (in)

ITEM	STANDARD	LIMIT	NOTE
Front fork stroke	120 (4.7)	——	
Front fork spring free length	——	330 (13.0)	
Front fork oil level	109 (4.29)	——	
Rear wheel travel	130 (5.1)	——	
Swingarm pivot shaft runout	——	0.3	

FUEL + OIL + COOLANT

ITEM	SPECIFICATION		NOTE
Fuel type	The gasoline used should be graded 85 to 95 octane in Research Method and should be unleaded type where they are available.		
Fuel tank including reserve	16 L (4.2/3.5 US/Imp gal)		
reserve	3.5 L (0.9/0.8 US/Imp gal)		
Engine oil type	Use SUZUKI CCI or CCI SUPER OIL. If they are not available, use a good quality 2-stroke oil rated FC under JASO classification.		
Engine oil tank capacity	1.1 L (1.2/1.0 US/Imp qt)		
Transmission oil type	SAE 10W/40		
Transmission oil capacity	Change	700 ml (23.6/24.6 US/Imp oz)	
	Overhaul	800 ml (27.0/28.1 US/Imp oz)	

Downloaded from www.Manualslib.com manuals search engine

ITEM	SPECIFICATION	NOTE
Front fork oil type	Fork oil #10	
Front fork oil capacity (each leg)	429 ml (14.5/15.1 US/Imp oz)	
Brake fluid type	DOT4	
Coolant type	Use an anti-freeze & Summer coolant compatible with aluminum radiator, mixed with distilled water only, at the ratio of 50 : 50.	
Radiator including reserve	1 900 ml (2.0/1.7 US/Imp qt)	

TIRE PRESSURE

COLD INFLATION TIRE PRESSURE	NORMAL RIDING					
	SOLO RIDING			DUAL RIDING		
	kPa	kg/cm²	psi	kPa	kg/cm²	psi
FRONT	200	2.00	29	200	2.00	29
REAR	225	2.25	33	250	2.50	36

Downloaded from www.Manualslib.com manuals search engine

Downloaded from www.Manualslib.com manuals search engine

Prepared by

SUZUKI MOTOR CORPORATION

Overseas Service Department
7th Ed. November, 1995
1st Ed. November, 1988
Part No. 99500-12077-01E
Printed in Japan

Downloaded from www.Manualslib.com manuals search engine

Downloaded from www.Manualslib.com manuals search engine

SUZUKI MOTOR CORPORATION

Printed in Japan TK
K L M N P R T

Downloaded from www.Manualslib.com manuals search engine