RANGMANG209

Rangmeng module is suitable for starting and controlling the RGB strip ws2811 to 2813 for 5V and 12V voltages.

- 990 PIXELS ATMEGA 128
-
- 98 MODULES OF THIS TYPE CAN BE PARALLELIZED
- THE MODULE ALSO HAS THE ABILITY TO DEFINE THE CHANNEL
- RECEIVE COMMANDS AS SERIAL UART BASED ON TTL
- WHICH IS DEFINED BY DEFAULT AS THE BLUETOOTH MODULE. OUR SUGGESTION FOR THE ANDROID OPERATING SYSTEM IS TO USE THE CLASSIC BLUETOOTH, FOR THE IOS OPERATING SYSTEM, USE THE BLUETOOTH BLE, OR AT THE CURRENT SPEED, USE THE BLUETOOTH WITH TWO WORKING MODELS. CLASSIC WORK AND BLE WORK MODE ARE FOR SIMULTANEOUS SUPPORT OF TWO TYPES OF OPERATING SYSTEMS. IN CASE OF USING RS232, THE COMPUTER MUST USE AN RS232 TO TTL CONVERTER TO APPLY THE COMMAND.
- RECEIVE ORDER WITHOUT EXTENSION OR PREFIX SIZE 22

- THE FIRST TWO HOUSES REFER TO THE CHANNEL INDICATED UP TO 99, WHICH IS FROM CHANNEL 01 TO 98 RELATED TO THE CONNECTED CHANNELS AND MODULES, AND CHANNEL 99 OR NUMBER 99 BROADCASTS THE COMMAND TO ALL MODULES.

ADDRESS	DANCE	RED	GREEN	BLUE			
99	33	255	255	255	001	255	990
CH	MOD	R	G	B	NS	NF	LEDS

The default channel is 01. If you define a channel, set the indicated pin to zero, then send the channel command

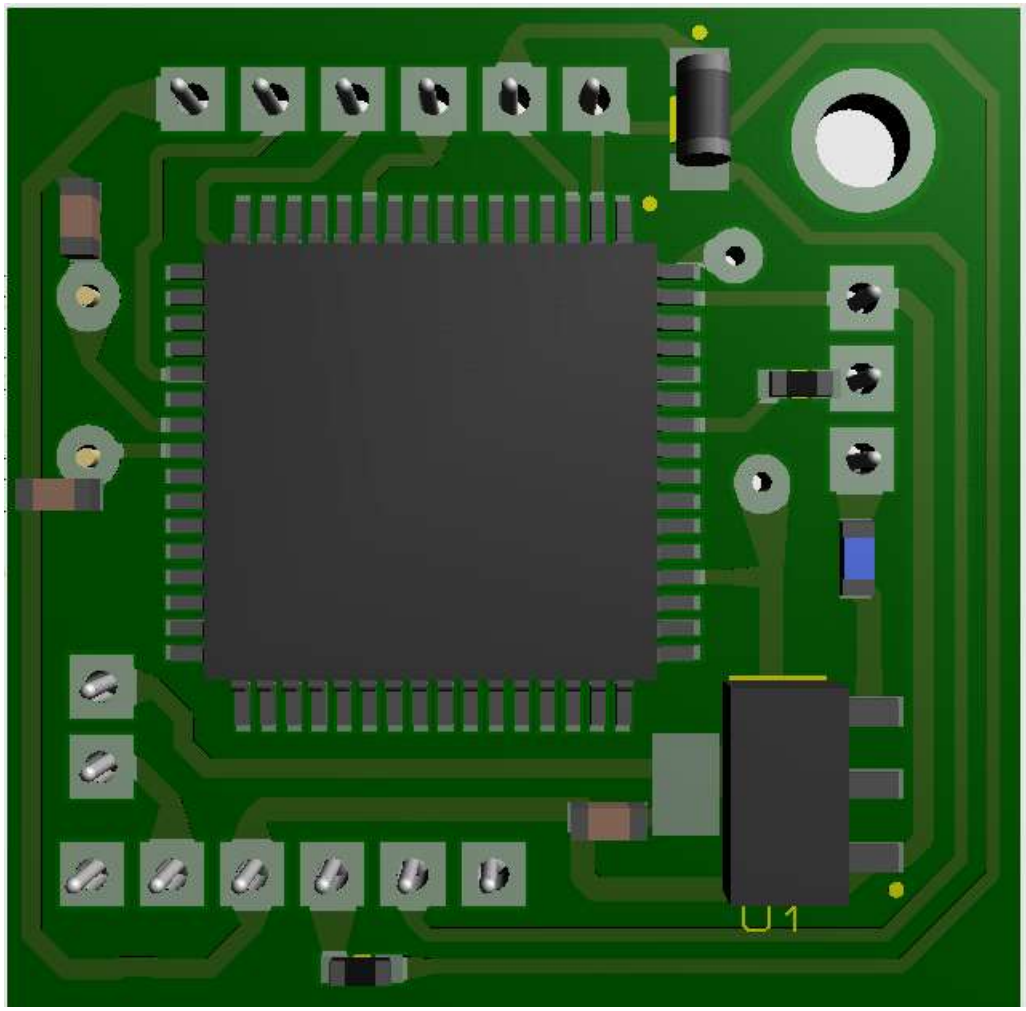

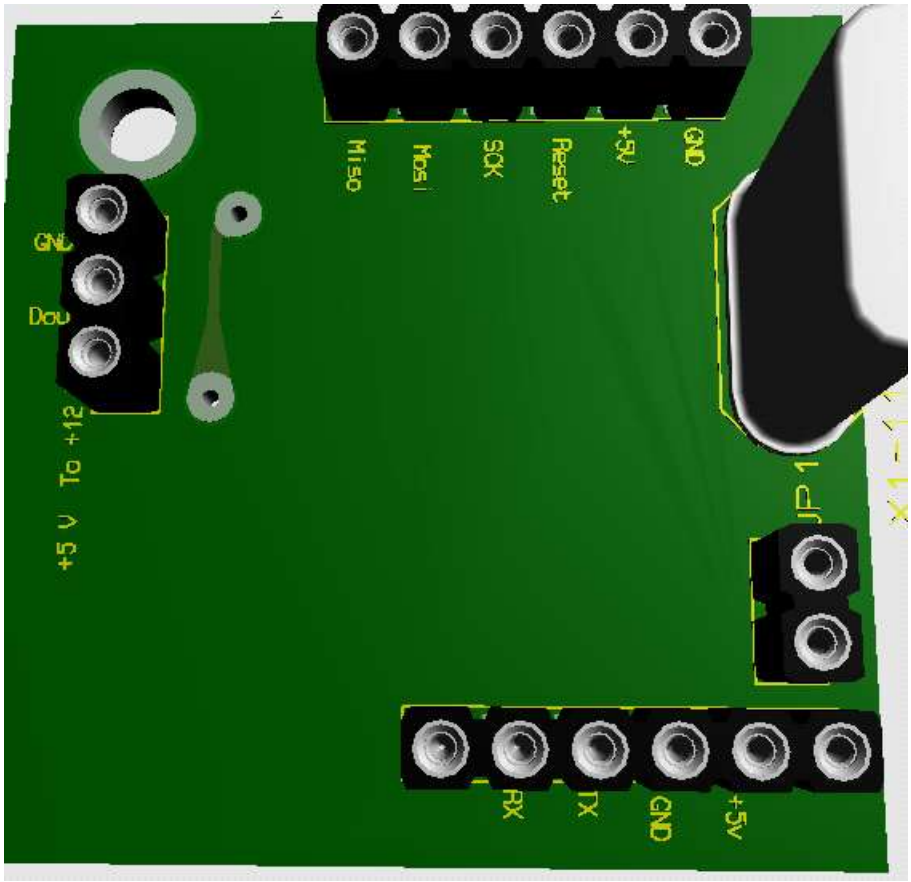

Connect the SCK pin to the GND and then send the following

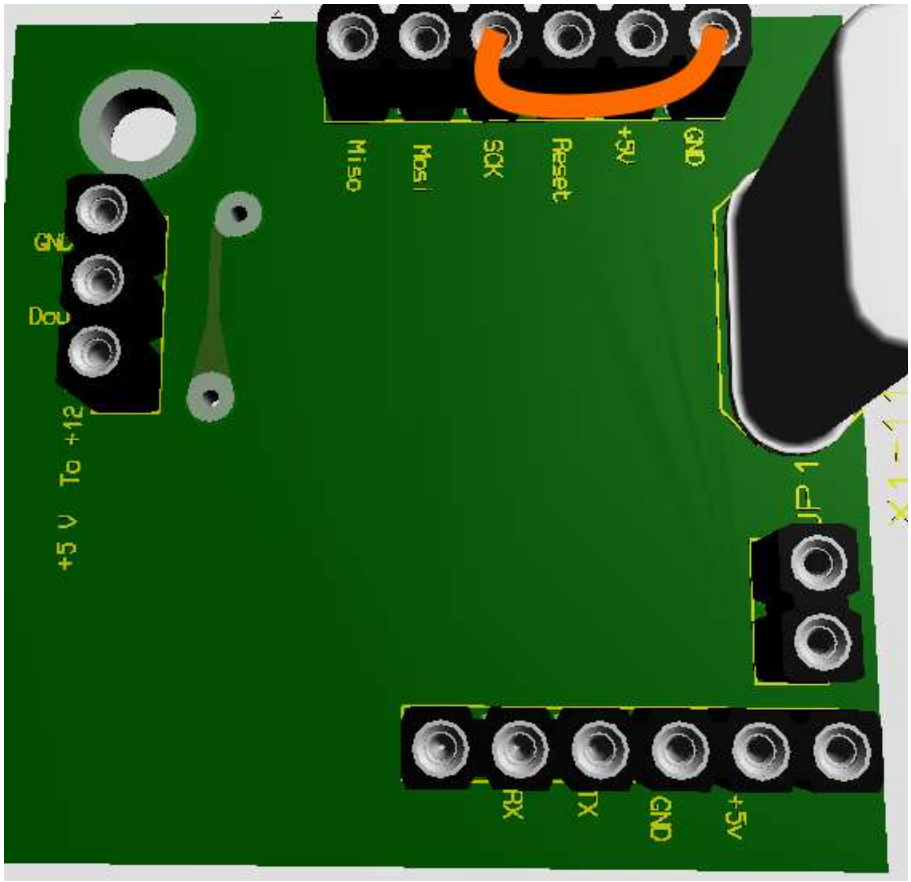

Module Configuration & Address Assignment Process

Pull down or connect the SCK pin to ground to prepare the microcontroller for address reception.

Send the address via Bluetooth serial communication in two-digit format.

Receive confirmation from the module—it responds with CH followed by the assigned number.

Release the SCK pin to return the module to normal operation.

Examples:

- Example for Address 04:

You send: 04

The module responds: CH4

You then release the SCK pin to resume normal operation.

◈ Example for Address 88:

You send: 88

The module responds: CH88

- THE SECOND HOUSE REFERS TO THE TYPE OF WORKING MODE, MODE 00, WHICH REFERS TO GIVING THE COLOR ORDER MANUALLY, AND
-
- MODE 01 TO 33 ARE THE DEFAULT LIGHT DANCE MODES, MODE 33 RANDOMLY SELECTS MODES 01 TO 29 OF THE LIGHT DANCE.
-

99 CH	33 MOD	255 R	255 G	255 B	001 NS	255 NF	990 LEDS

- THE THIRD HOUSE REFERS TO THE RED COLOR 000 TO 255 PAY ATTENTION TO THE VALUES OF 251, 252, 253, 254, 255, RESPECTIVELY, IN DANCE MODE, IT SELECTS A RANDOM VALUE, WHICH IS 251 PALE RANDOM, TO 255 RANDOM. IT IS A LOT

99 CH	33 MOD	255 R	255 G	255 B	001 NS	255 NF	990 LEDS

10-THE THIRD HOUSE REFERS TO THE GREEN COLOR 000 TO 255

PAY ATTENTION TO THE VALUES OF 251, 252, 253, 254, 255, RESPECTIVELY, IN DANCE MODE, IT SELECTS A RANDOM VALUE, WHICH IS 251 PALE RANDOM, TO 255 RANDOM. IT IS A LOT RANDOM. IT IS A LOT

99 CH	33 MOD	255 R	255 G	255 B	001 NS	255 NF	990 LEDS

11- THE THIRD HOUSE REFERS TO THE BLUE COLOR 000 TO 255 PAY ATTENTION TO THE VALUES OF 251, 252, 253, 254, 255, RESPECTIVELY, IN DANCE MODE, IT SELECTS A RANDOM VALUE, WHICH IS 251 PALE RANDOM, TO 255 RANDOM. IT IS A LOT

99 CH	33 MOD	255 R	255 G	255 B	001 NS	255 NF	990 LEDS

12- THE SIXTH HOUSE IN THE 00 MODE REFERS TO THE START OF THE PIXEL AND IN THE LIGHT DANCE MODE IT REFERS TO THE FIRST TIME OR PIXEL INTERVAL.

VALUES FOR MODE 00 OR MANUAL AND FIXED COLOR FROM 000 TO 255 LEDS

VALUES FOR LIGHT DANCE MODE > 00 TIME MILLISECONDS FROM 000 TO 999

NS

99 CH	33 MOD	255 R	255 G	255 B	001 NS	999 NF	999 LEDS

13- THE SEVENTH HOUSE IN THE 00 MODE REFERS TO THE END OF THE PIXEL AND IN THE LIGHT DANCE MODE REFERS TO THE SECOND TIME

VALUES FOR MODE 00 OR MANUAL AND FIXED COLOR FROM 000 TO 255 LEDS

VALUES FOR LIGHT DANCE MODE > 00 TIME MILLISECONDS FROM

000 TO 999

NF

99 CH	33 MOD	255 R	255 G	255 B	001 NS	999 NF	999 LEDS

14- MEM Mod 00

If 001 to 098 are selected, you can divide the strip into 10 separate sections, each with its own independent color.

If 996 is selected, all 98 memory slots will be cleared, and the entire strip will turn off.

If 997 is selected, the strip will turn off, but the memory will remain intact.

If 998 is selected, the entire strip will be colored, but without saving the data in memory.

If 999 is selected, the entire strip will be colored, and the information will be stored in memory slot

If the memory is not needed, set it to 000

99 CH	00 MOD	255 R	255 G	255 B	001 NS	999 NF	098 MEM

mod , it is mentioned that the dance of lights is no longer a memory, but the number of pixels involved

for Atmega128 001 to 999 pixels

99 CH	33 MOD	255 R	255 G	255 B	001 NS	999 NF	990 LEDS

1. For the WS2812 strip (5V): You send the standard RGB format, which means Red, Green, and Blue.

2. For the WS2811 strip (12V): You need to send RBG, which means Red, Blue, and Green. In this type of strip, the Green and Blue positions are swapped compared to the WS2812, so you must take this into account.

Example of sending the color blue :

For WS2812: Sending blue 123 to 222 pixels with memory 1:

01 00 000 000 123 000 222 001

For WS2811: Sending blue 123 to 222 pixels with memory 1:

01 00 000 123 000 000 222 001

Examples :

The first thread should be bright and white, the length of the thread is one meter, the type of thread is type 2811, density 30, and it should be stored in the memory of 001. White color is a combination of three colors, red, green, blue. This type of combination can be made with the help of a color table or experimentally or with the help of rgb color combination software. Thread after channel 01 mode 00 red color 255 green color 255 blue color 255 start pixel 000 end pixel 010 and memory
!! ws2811 R B G

001 0100255255255000010001

01 CH	00 MOD	255 R	255 G	255 B	001 NS	010 NF	001 MEM

#####

The same as the previous example ws2811 , half is medium green and the other half is medium red:

The average color is 128 !

We need to send two commands

01 CH	00 MOD	000 R	000 B	128 G	001 NS	005 NF	001 MEM

####

The same as the previous example ws2812 , half is medium green and the other half is medium red:

The average color is 128 !

We need to send two commands

01 CH	00 MOD	000 R	128 G	000 B	001 NS	005 NF	001 MEM

ws2811 >>> 01 00 000 000 128 000 005 001

ws2811 >>> 0100000000128000005001

ws2812 >>> 01 00 000 128 000 000 005 001

ws2812 >>> 0100000128000000005001

WS2812

Channel 01 Mode 00 Red 000 Green 128 Blue 000 Start 000 End 005
Memory 001 for ws2812

01 CH	00 MOD	000 R	128 G	000 B	001 NS	010 NF	002 MEM

0100128000000005010002

Channel 01 Mode 00 Red 128 Green 000 Blue 000 Start 005 End 010
Memory 002

Now an example of light dance:

100 pixels DANCE1 very fast light dance and medium random colors

01 CH	01 MOD	253 R	253 G	253 B	000 T1	000 T2	100 LED

t1= time1 effect dance 000 ms to 999 ms t2 =time2 effect dance 000 ms to 999 ms

0101253253253000000100

Channel 01 Mode 01 Red 253 Green 253 Blue 253 dellay1 000 dellay2 000 leds 100

!!!!!!!!!!!!!!!!

In the static color mode (00), the last three sets of three-digit values after the color settings represent the following:

01 CH	00 MOD	000 R	128 G	000 B	001 NS	010 NF	002 MEM

Start LED Address – The first LED in the strip that will be affected.

End LED Address – The last LED in the strip that will be affected.

Memory Slot or Special Codes – This determines either a predefined memory slot or special values such as 996 to 999 for specific commands.

However, in dynamic lighting modes (01 to 33) (such as dance effects), these three values serve different functions:

01 CH	05 MOD	253 R	253 G	253 B	000 T1	000 T2	100 LED

mod 01 to 33

First Effect Timing – Defines the duration or delay of the first lighting effect.

Second Effect Timing – Controls the duration of the second phase of the effect.

Number of Pixels Involved – Determines how many pixels will be engaged in the dynamic lighting effect.

The Rangmand209 modules can connect to each other for receiving and responding to serial data. It is sufficient to connect only one module to Bluetooth or a serial interface.

Do not connect the 5V pin of each module to the others, as this can lead to regulator errors, potential malfunctions, and system-wide failures. Only three pins—GND, RX, and TX—should be interconnected.

Pins	Connections
GND	GND1 → GND2 → GND3 → ... → GND98
RX	RX1 → RX2 → RX3 → ... → RX98
TX	TX1 → TX2 → TX3 → ... → TX98

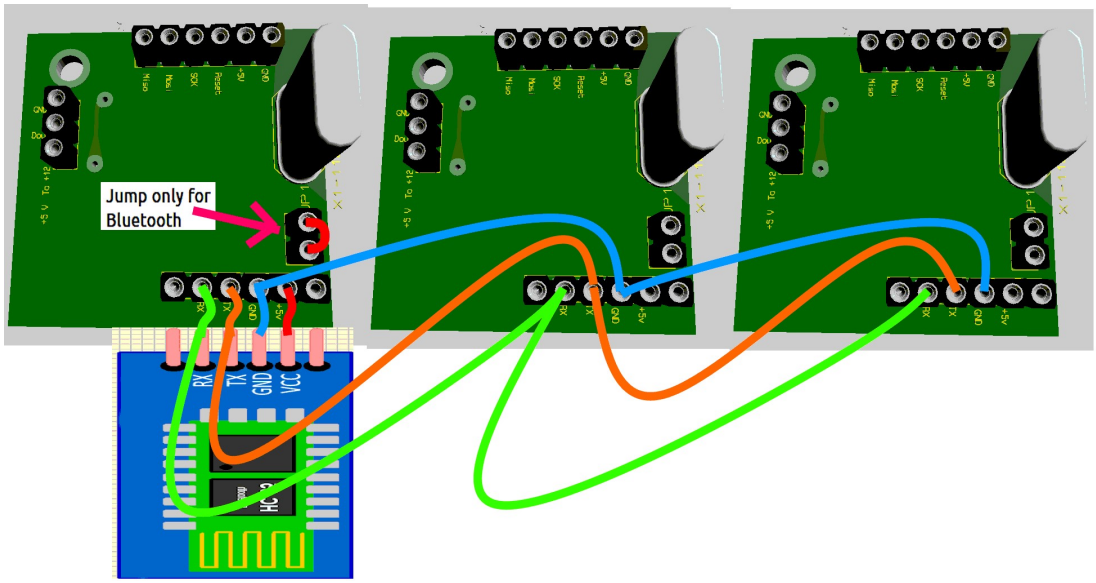

Do not connect the 5V pin to prevent regulator errors and potential damage to the modules.

Keywords ws2811 ws2812 ws2812b soifdesign android-app blue