CONNECTORS

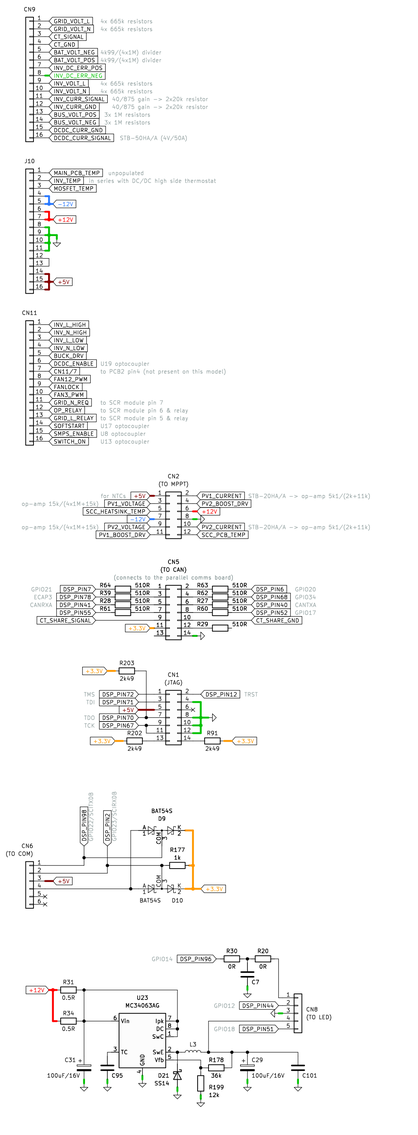

INVERTER CURRENT, SHORT-CIRCUIT PROTECTION, DIGITAL OUTPUTS

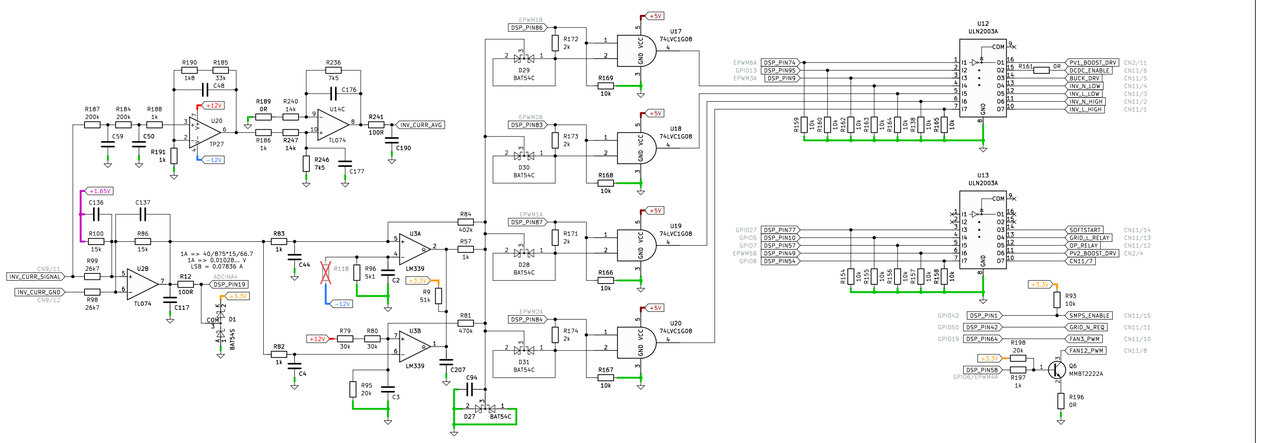

ADC MULTIPLEXERS

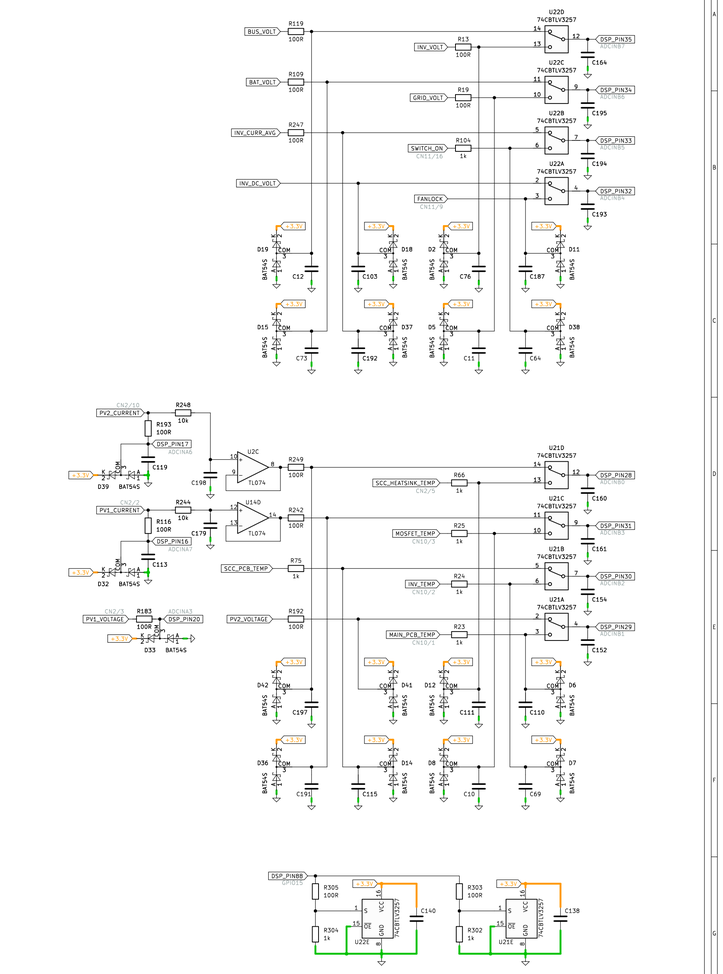

+1.65V REFERENCE

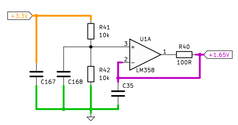

INVERTER VOLTAGE

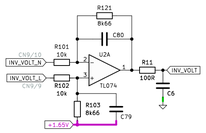

GRID VOLTAGE, ZERO CROSS DETECTION

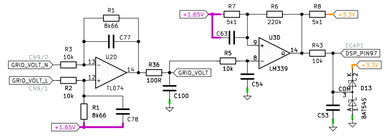

CRYSTAL

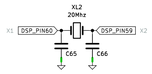

BUS VOLTAGE

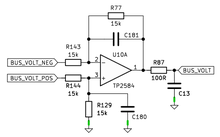

BATTERY VOLTAGE

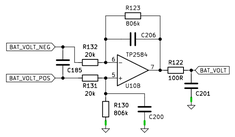

RESET CIRCUIT

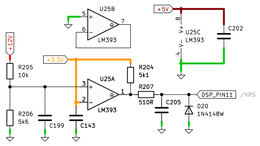

INVERTER DC ERROR

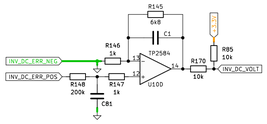

DC/DC HV SIDE CURRENT

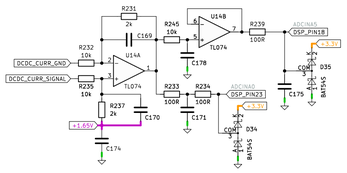

CURRENT TRANSFORMER

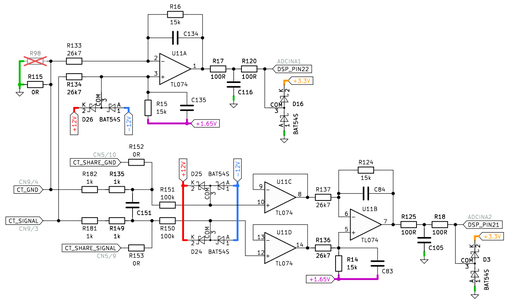

POWER

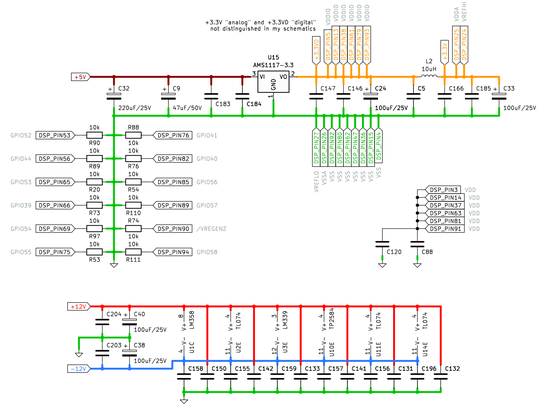

EEPROM

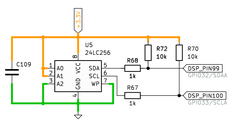

BUZZER

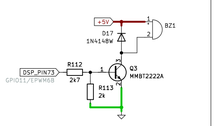

UNUSED PARTS

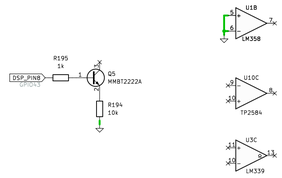

Board no. 16-502001-02G (A)

Sheet: /
File: easun-smw-dsp.kicad_sch

Title: Easun SMW 8kW - DSP board

Size: A1	Date: 2026-02-16	Rev:
KiCad E.D.A. 9.0.7		Id: 1/1