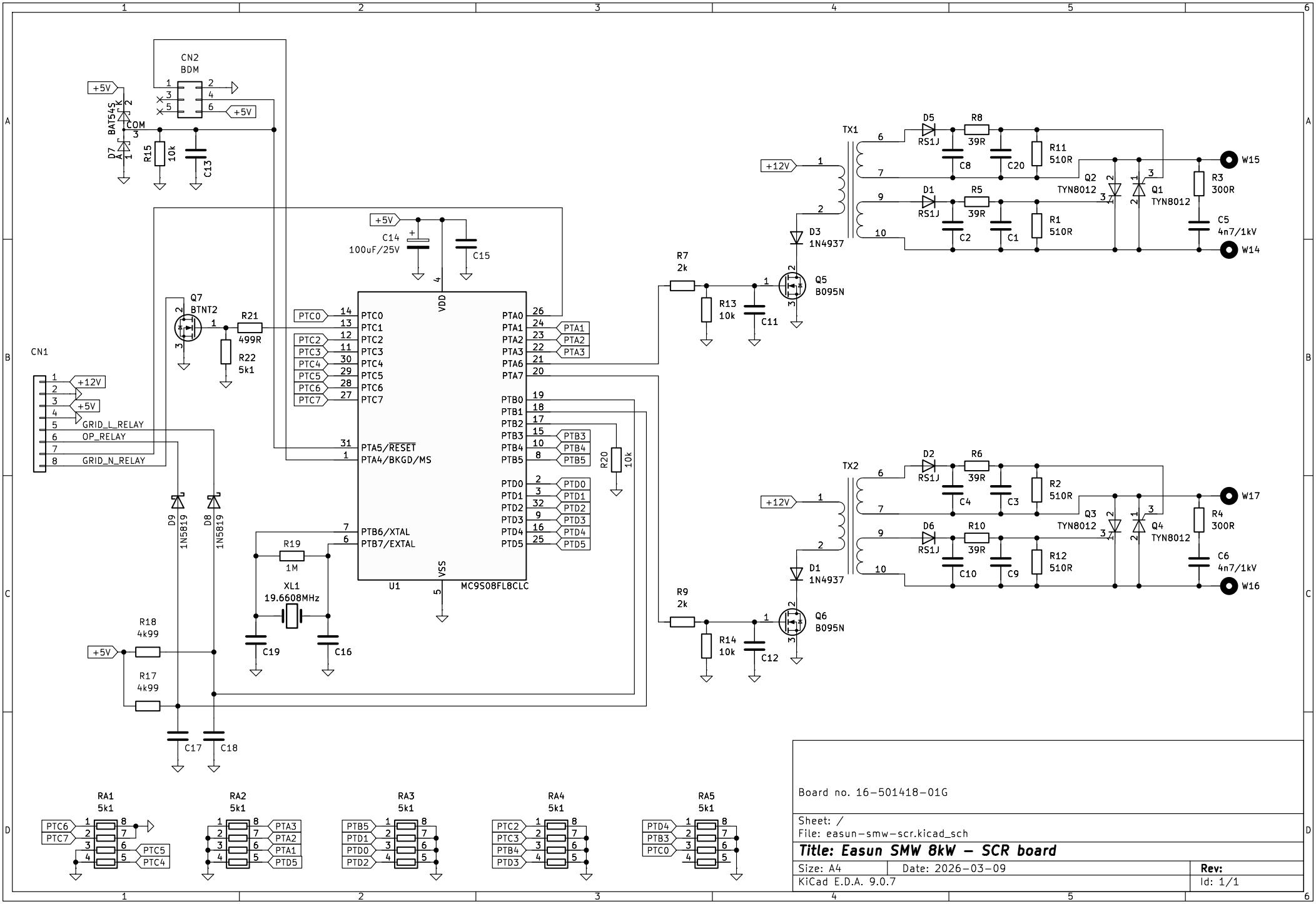

Board no. 16-501418-01G

Sheet: /
File: easun-smw-scr.kicad_sch

Title: Easun SMW 8kW - SCR board

Size: A4	Date: 2026-03-09	Rev:
KiCad E.D.A. 9.0.7		Id: 1/1