Roof Report

March 21, 2026

Prepared by:

Repair King

680 Transfer Rd

Saint Paul , MINNESOTA 55114

mholmes@myrepairking.com

(612) 354-7677

7270 Hillsdale Court, Chanhassen, MN 55317

Powered by PG Reports™

©2025 Pitch Gauge LLC

Repair King
mholmes@myrepairking.com
(612) 354-7677
7270 Hillsdale Court, Chanhassen, MN 55317

Pitch Breakdown

(1/12) 1.4 ft²
(4/12) 279 ft²
(6/12) 2,434.69 ft²
(9/12) 1.08 ft²
(10/12) 716.45 ft²

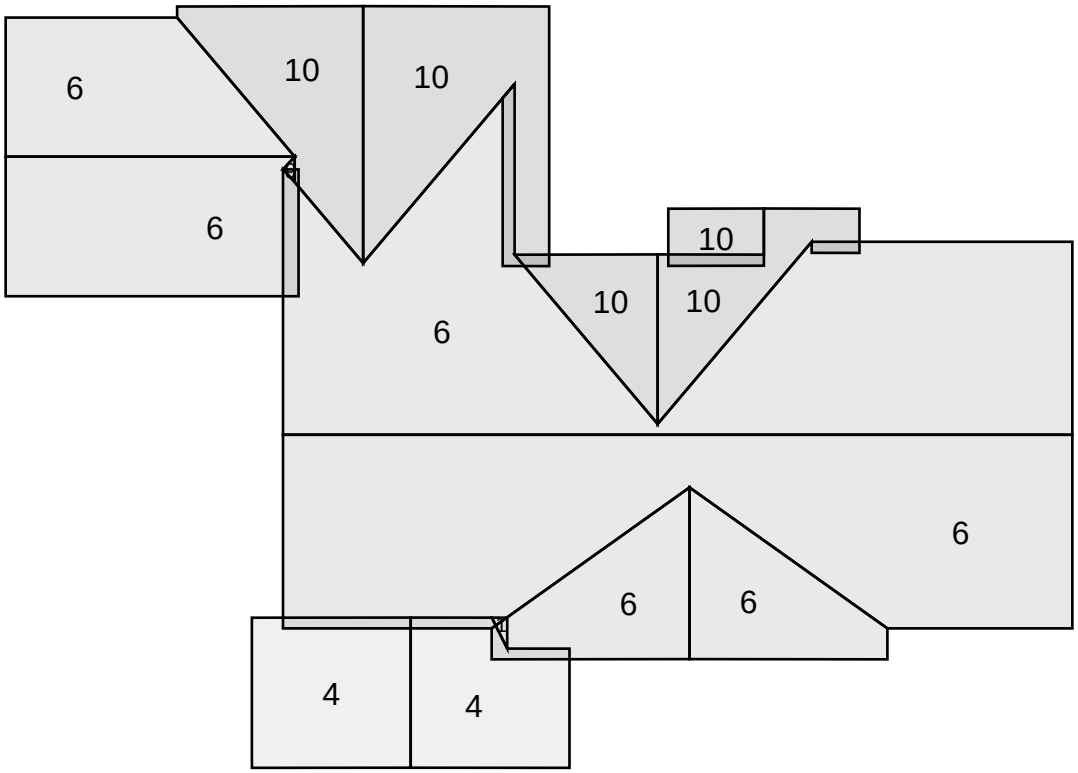

©2025 Pitch Gauge LLC

Repair King
mholmes@myrepairking.com
(612) 354-7677
7270 Hillsdale Court, Chanhassen, MN 55317

Area Breakdown

34.3 SQs

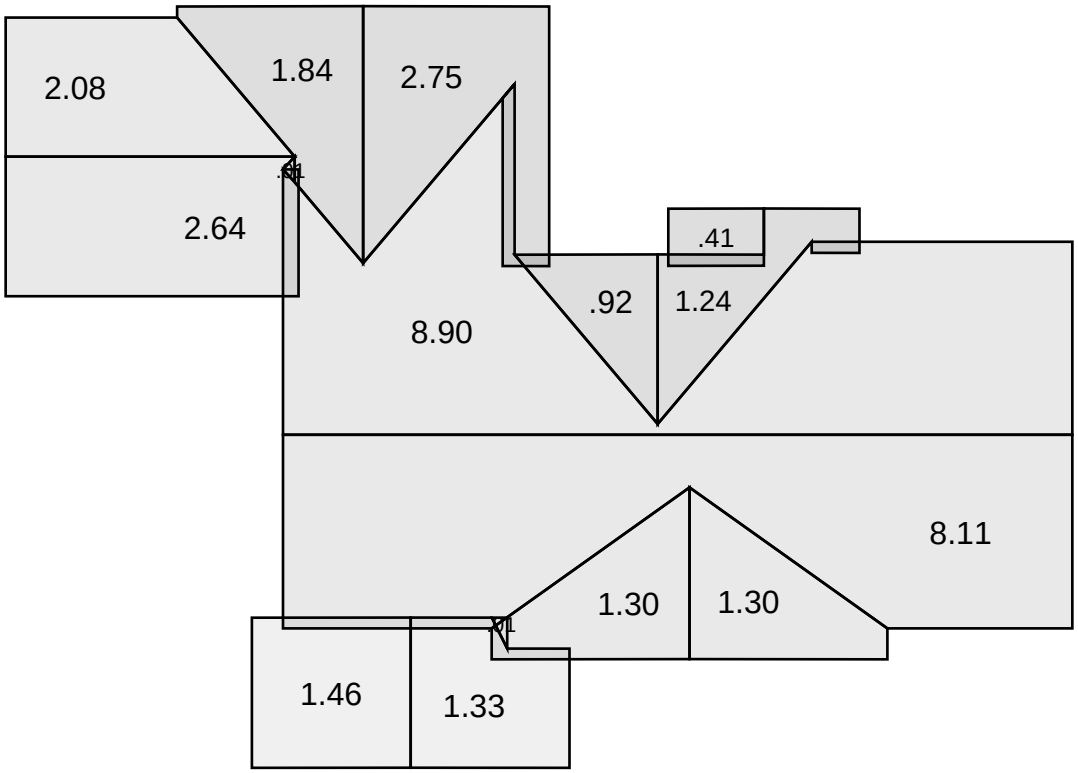

Repair King
mholmes@myrepairking.com
(612) 354-7677
7270 Hillsdale Court, Chanhassen, MN 55317

Length Breakdown

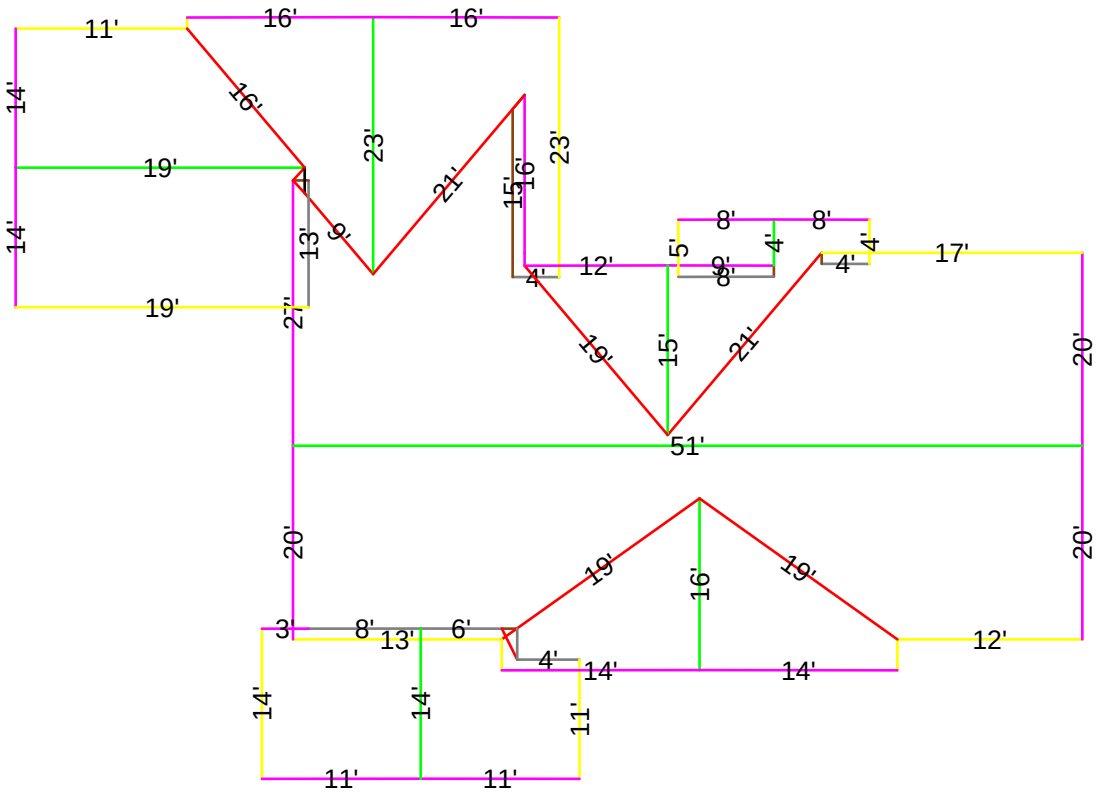

Ridges:	141ft 2in	Wall Flashing:	19ft 2in
Eaves:	135ft 6in	Step Flashing:	50ft 5in
Rakes:	252ft 1in	Gutters:	0ft 0in
Valleys:	130ft 4in		
Hips:	0ft 0in	Others:	2ft 3in

©2025 Pitch Gauge LLC

Repair King
mholmes@myrepairking.com
(612) 354-7677

7270 Hillsdale Court, Chanhassen, MN 55317

Totals

Ridges:	141ft 2in
Eaves:	135ft 6in
Rakes:	252ft 1in
Valleys:	130ft 4in
Hips:	0ft 0in
Wall Flashing:	19ft 2in
Step Flashing:	50ft 5in
Gutters:	0ft 0in
Others:	2ft 3in
Tear Off:	34.33 SQs (3,432.61 ft²)

Waste Factor	5%	10%	12%	15%	18%	20%	22%	25%
Total Squares	36.04	37.76	38.45	39.48	40.50	41.19	41.88	42.91
Total Area ft²	3,604	3,776	3,845	3,948	4,050	4,119	4,188	4,291

We rely on 3rd party data including pictures, imagery, and software to obtain measurements that are as close as possible to the actual structure. Reports are usually within 96% or higher of the actual structures. You should always confirm quantities prior to ordering and ensure you are following local building code requirements.