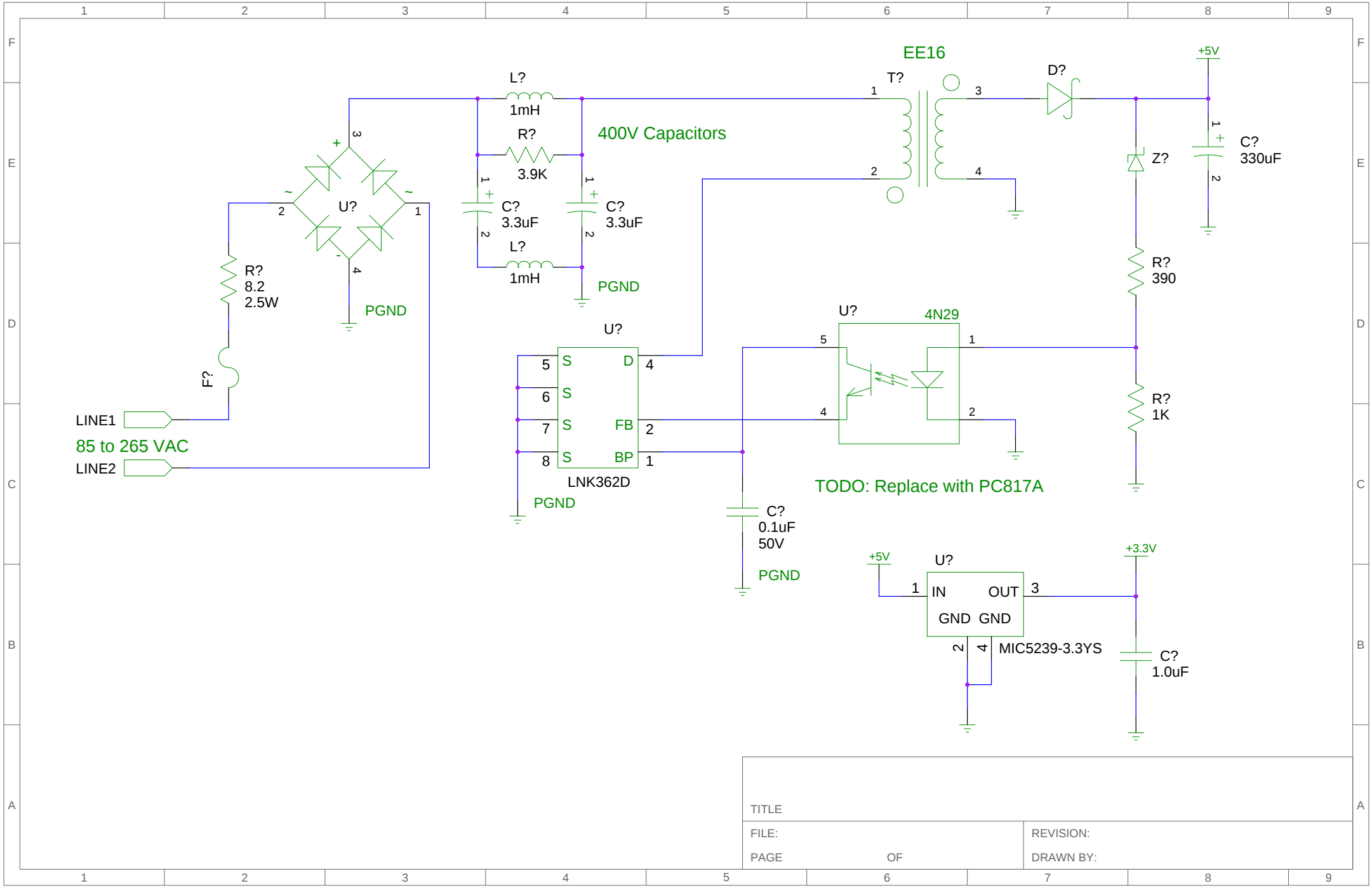
EE16
T?
L?
1mH
R?
3.9K
400V Capacitors
C?
3.3uF
C?
3.3uF
L?
1mH
PGND
U?
R?
8.2
2.5W
PGND
F?
LINE1
85 to 265 VAC
LINE2
U?
S
S
S
S
D
FB
BP
LNK362D
PGND
C?
0.1uF
50V
PGND
D?
+5V
C?
330uF
Z?
R?
390
U?
4N29
R?
1K
TODO: Replace with PC817A
+5V
U?
IN
OUT
GND
GND
MIC5239-3.3YS
+3.3V
C?
1.0uF
TITLE
FILE:
REVISION:
PAGE
OF
DRAWN BY:

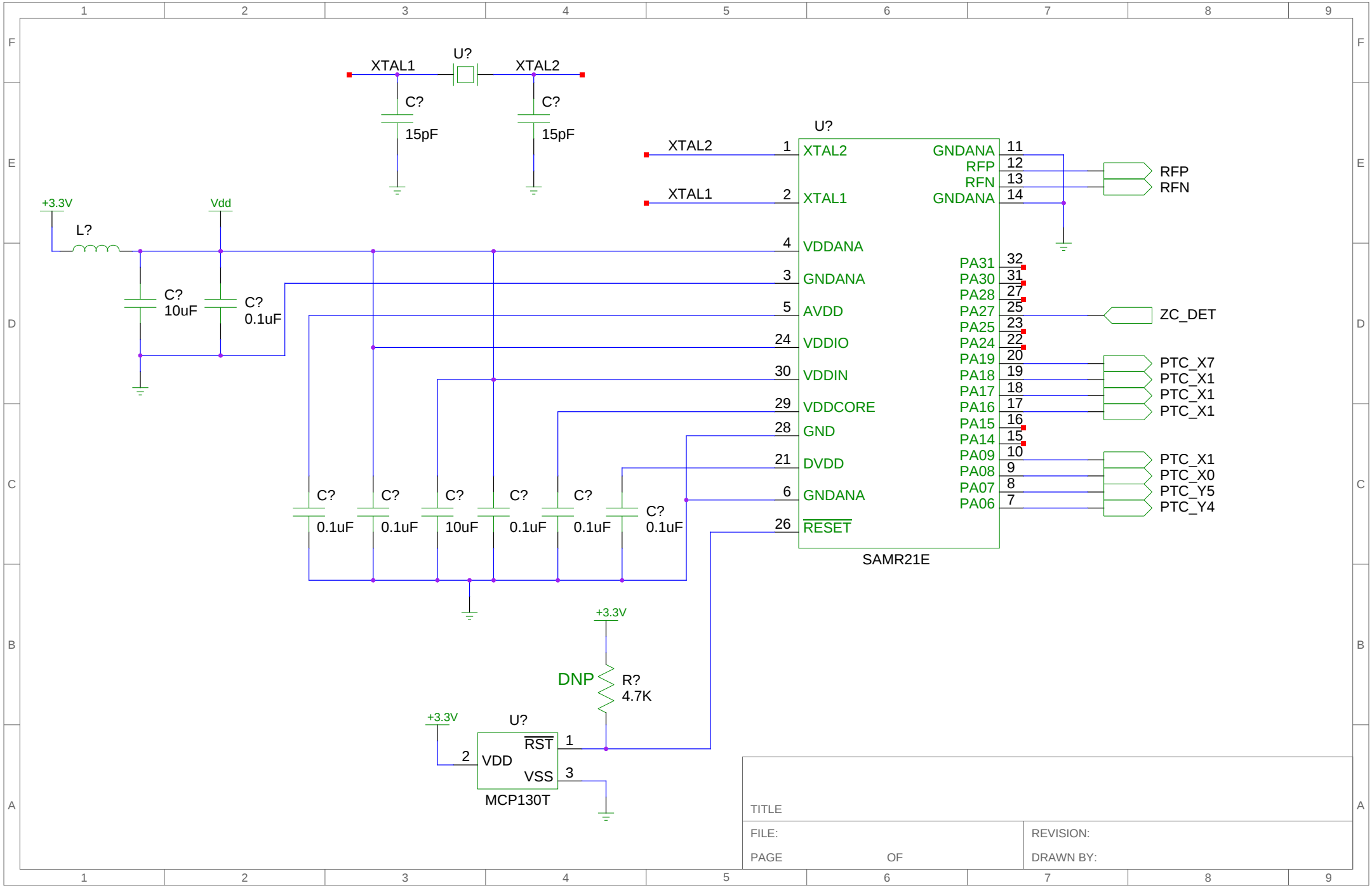
XTAL1
U?
XTAL2
C?
15pF
C?
15pF
U?
XTAL2
XTAL1
1 XTAL2
2 XTAL1
4 VDDANA
3 GNDANA
5 AVDD
24 VDDIO
30 VDDIN
29 VDDCORE
28 GND
21 DVDD
6 GNDANA
26 RESET
GNDANA 11
RFP 12
RFN 13
GNDANA 14
PA31 32
PA30 31
PA28 27
PA27 25
PA25 23
PA24 22
PA19 20
PA18 19
PA17 18
PA16 17
PA15 16
PA14 15
PA09 10
PA08 9
PA07 8
PA06 7
RFP
RFN
ZC_DET
PTC_X7
PTC_X1
PTC_X1
PTC_X1
PTC_X1
PTC_X0
PTC_Y5
PTC_Y4
SAMR21E
+3.3V
Vdd
L?
C?
10uF
C?
0.1uF
C?
0.1uF
C?
0.1uF
C?
10uF
C?
0.1uF
C?
0.1uF
C?
0.1uF
+3.3V
DNP
R?
4.7K
+3.3V
U?
2 VDD
RST 1
VSS 3
MCP130T
TITLE
FILE:
REVISION:
PAGE
OF
DRAWN BY:

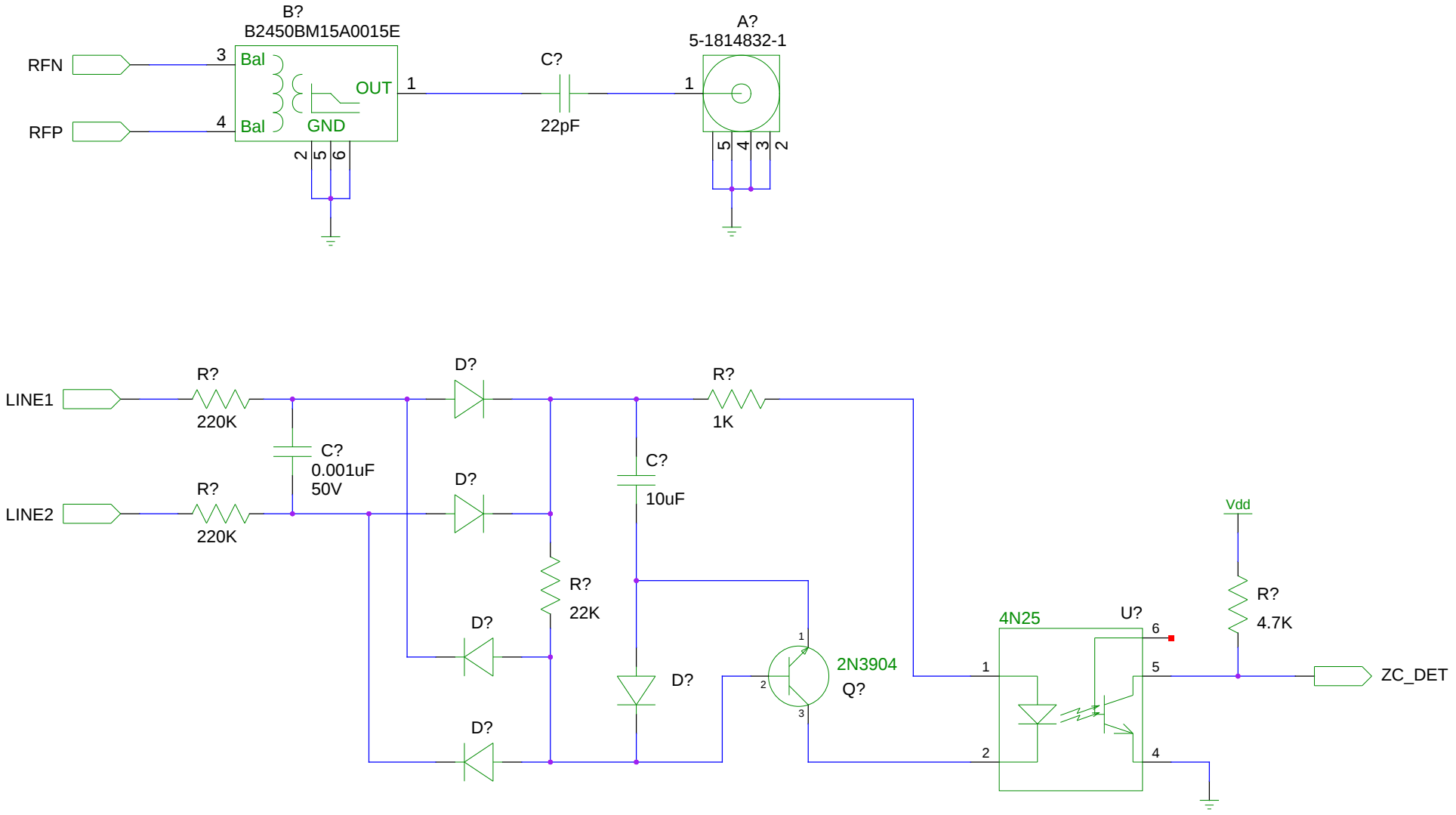

TITLE

FILE:

PAGE OF

REVISION:

DRAWN BY: