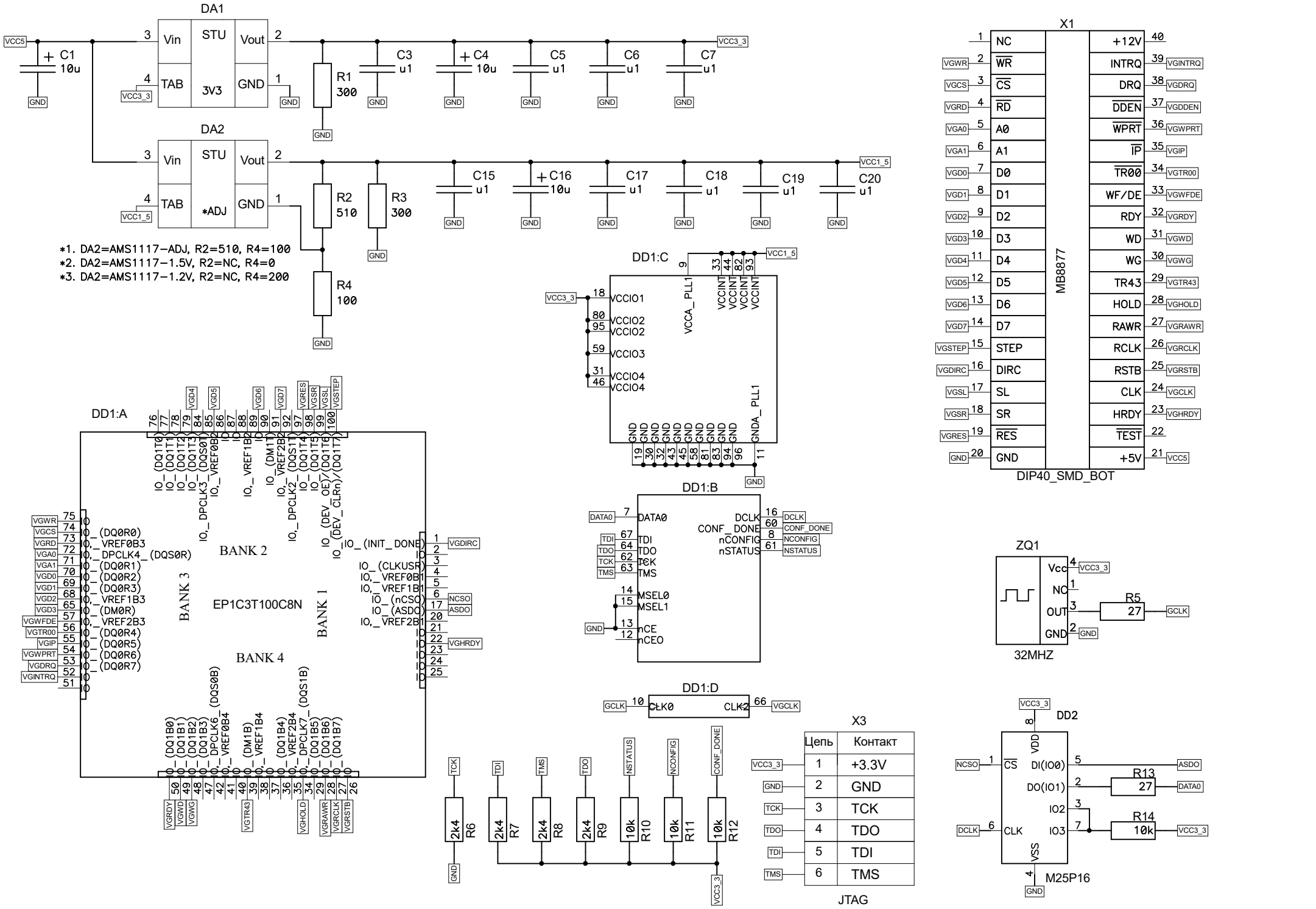
DA1
DA2
Vin
STU
Vout
TAB
3V3
GND
*ADJ
C1 10u
C3 u1
C4 10u
C5 u1
C6 u1
C7 u1
R1 300
R2 510
R3 300
R4 100
C15 u1
C16 10u
C17 u1
C18 u1
C19 u1
C20 u1
VCC5
VCC3_3
VCC1_5
GND
*1. DA2=AMS1117-ADJ, R2=510, R4=100
*2. DA2=AMS1117-1.5V, R2=NC, R4=0
*3. DA2=AMS1117-1.2V, R2=NC, R4=200
X1
MB8877
DIP40_SMD_BOT
NC
WR
CS
RD
A0
A1
D0
D1
D2
D3
D4
D5
D6
D7
STEP
DIRC
SL
SR
RES
GND
+12V
INTRQ
DRQ
DDEN
WPRT
IP
TR00
WF/DE
RDY
WD
WG
TR43
HOLD
RAWR
RCLK
RSTB
CLK
HRDY
TEST
+5V
DD1:A
DD1:B
DD1:C
DD1:D
EP1C3T100C8N
BANK 1
BANK 2
BANK 3
BANK 4
VCCIO1
VCCIO2
VCCIO3
VCCIO4
VCCA_PLL1
GNDA_PLL1
DATA0
TDI
TDO
TCK
TMS
MSEL0
MSEL1
nCE
nCEO
DCLK
CONF_DONE
nCONFIG
nSTATUS
CLK0
CLK2
ZQ1
32MHZ
Vcc
NC
OUT
GND
R5 27
DD2
M25P16
VDD
CS
DI(IO0)
DO(IO1)
IO2
IO3
CLK
VSS
R13 27
R14 10k
X3
JTAG
Цепь
Контакт
1 +3.3V
2 GND
3 TCK
4 TDO
5 TDI
6 TMS
R6 2k4
R7 2k4
R8 2k4
R9 2k4
R10 10k
R11 10k
R12 10k