ecocirc® XL

HIGH EFFICIENCY LARGE WET ROTOR PUMP FOR HEATING, COOLING AND POTABLE WATER SYSTEMS

A-162C

Bell & Gossett
a xylem brand

Exactly what you need in a circulator

As the industry leader with more HVAC and plumbing installations in North America than any other manufacturer, Xylem's Bell & Gossett brand provides high-performing products that are easy to install, start-up and service.

The ecocirc XL is a highly effcient circulator that enhances commercial hydronics systems with superior quality and dependability. State-of-the-art hydraulics, advanced motor design, intelligent controls, and smart communication capabilities highlight expert engineering across a broad range of HVAC and plumbing applications.

Economical operation
A highly efficient ECM motor combined with optimized pump hydraulics, keeps operational costs at a minimum.

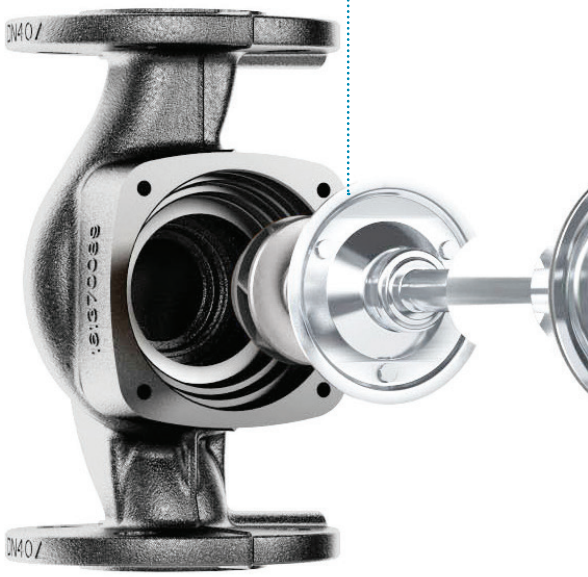

Keep it hot or cold
A closed, perfectly molded insulation shell preserves a constant temperature of the pumped liquid.

The Intelligent Drive

essential Controls

The ecocirc XL can operate in 3 different standard control modes:
- Proportional pressure control
- Constant pressure control
- Constant speed

Night mode functionality provides additional energy savings. Advanced settings can be managed from a PC, tablet or smartphone, and are accessible via optional built-in wireless or RS-485 cable.

User-friendly interface

With only four logically placed buttons on an intuitive interface, it's easy to set and operate the new ecocirc XL. Advanced settings enable custom programming, accessible via a PC, smartphone or wireless enabled device.

High visibility

Even in dark mechanical rooms, a bright display with large figures and symbols makes it easy to view pump status.

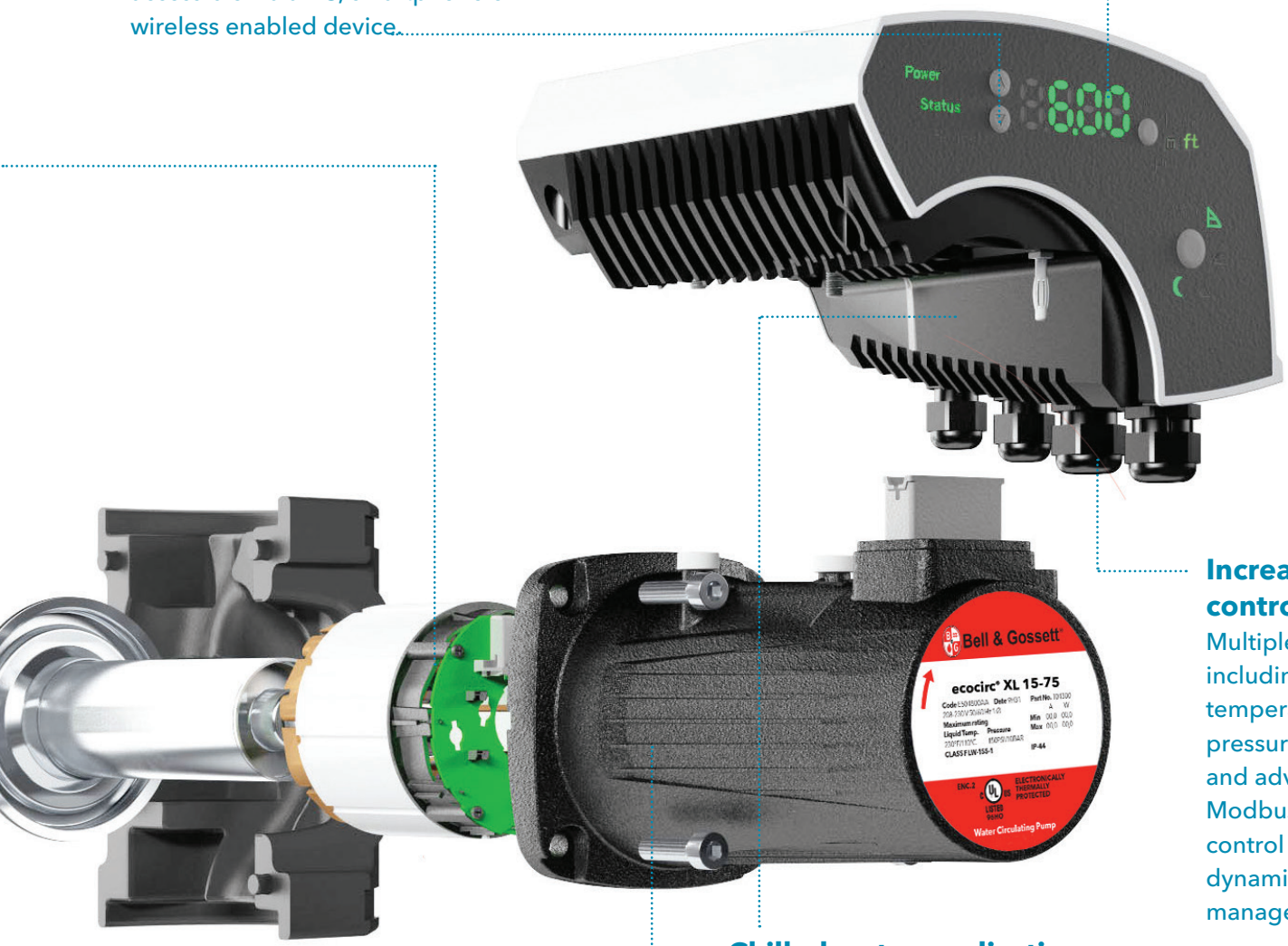

Increase your control options

Multiple inputs including start-stop, temperature control, pressure regulation and advanced Modbus or BACnet control provide dynamic system management.

Pump protection

Built-in dry-run protection stops pump operation in the absence of water, preventing damage and costly repairs.

Chilled water applications

Electronics are separated from the pump to prevent condensation for worry free operation even at 14°F (-10°C).

evolved Communication

- The ecocirc XL communicates with advanced Building Management Systems via Modbus or BACnet protocols.
- Two analog inputs – one for the differential pressure sensor (4-20 mA), and another (0-10V) for speed control
- An external temperature probe can be added for more advanced temperature control.
- Start-stop functionality is built-in.

enhanced Monitoring

- If something unexpected occurs, alarm and error codes are displayed and stored in a data log.
- Runtime data is stored for optimized settings.
- Simplifies problem diagnostics.

Easy selection from a large performance coverage with as few models as possible

Performance targeted to individual specifications is delivered across a broad spectrum of head and flow requirements. The simple pump model description makes the selection process easier to find the correct unit for any application.

ecocirc XL High Head Performance Range

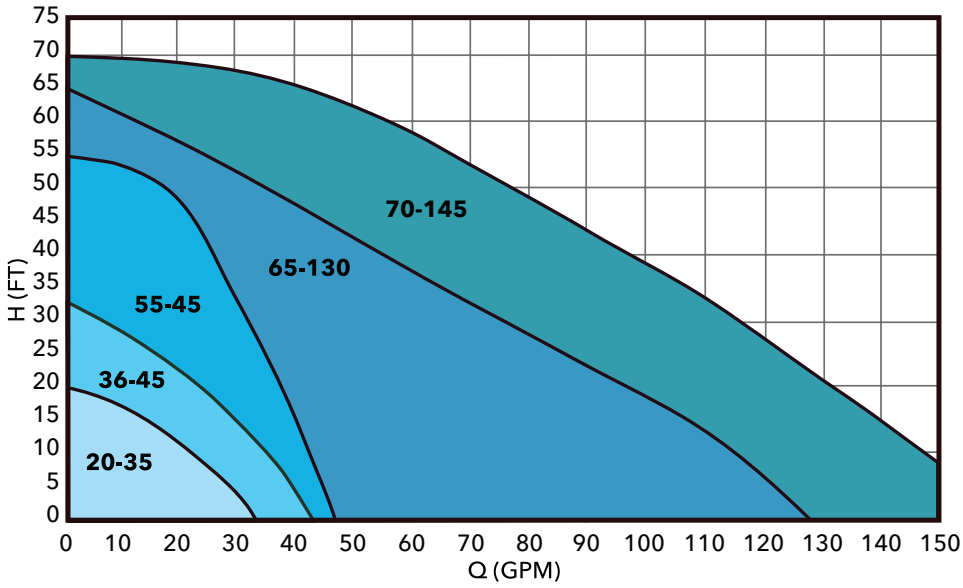

ecocirc XL High Flow Performance Range

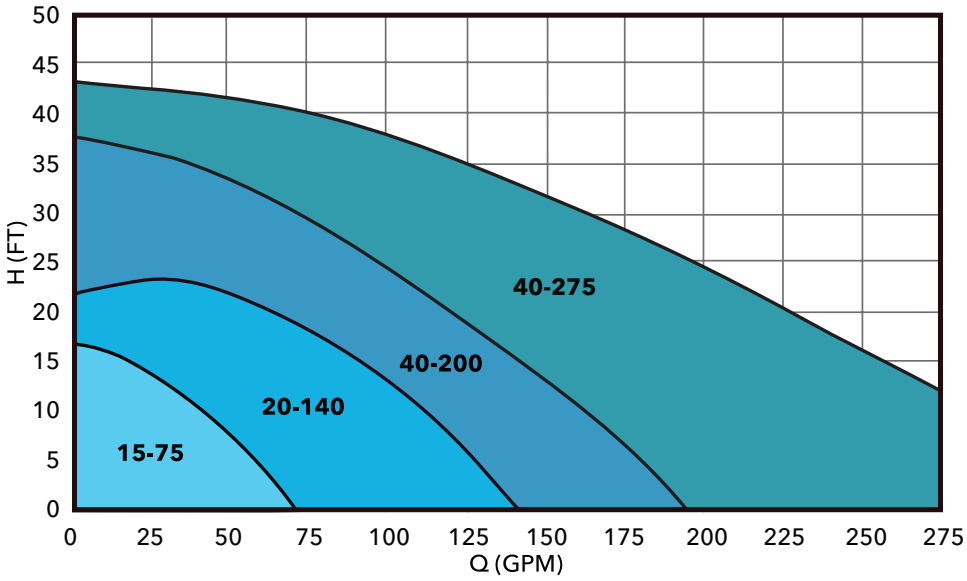

Communicates Clearly

A simplified, user-friendly status display keeps the installer informed on pump settings and performance. Communicate with Modbus and BACnet systems, or use wireless connectivity to communicate with the pump for remote control from your smart phone or wireless enabled device.

Features
Control Modes
Proportional Pressure curve (Δp-v)
Constant Pressure curve (Δp-c)
Constant Speed curve
Automatic Night mode
Temperature Control Modes
T-Constant Control
ΔT-Constant Control
Δp-T (Paired with proportional or constant pressure mode)
Readings and settings on the pump
Control and display panel
Operating status
Warning and alarm
Errors and work log history
Dry running detection
Input/Output
2 x analog inputs (0-10V / 4-20mA)
1 x external temperature sensor input
1 x start/stop input
1 x status output
Communication and monitoring
Communication with BMS
Communication with PC/Laptop
Wireless module for short range wireless communication (optional)

With 9 models to choose from there's always an exact match for any system.

The ecocirc XL is a high efficiency, variable speed, wet rotor pump with integrated drive. The circulator is available in cast iron or stainless steel and with a broad temperature range of 14°F to 230°F (-10°C to 110°C). The ecocirc XL is suitable for both hot and chilled water systems.

Product Range Chart

Model Number	Version		Power Supply		Flange Connection				Pump Body		Fluid Temp. Range	Ambient Temp. Range	Max. Pressure Range	Protection Class
	High Head	High Flow	Single Phase 115V	Single Phase 208-230V	Small Booster (2 Bolts)	Large Booster (2 Bolts)	2" Booster (4 Bolts)	3" Booster (4 Bolts)	Cast Iron	Stainless Steel	14°F - 230°F	32°F - 104°F	175 PSI	IP44
ecocirc XL 20-35	•		•		•				•	•	•	•	•	•
ecocirc XL 36-45	•		•	•	•				•	•	•	•	•	•
ecocirc XL 15-75		•	•	•			•		•	•	•	•	•	•
ecocirc XL 55-45	•			•	•				•	•	•	•	•	•
ecocirc XL 20-140		•		•			•		•	•	•	•	•	•
ecocirc XL 65-130	•			•		•			•	•	•	•	•	•
ecocirc XL 40-200		•		•			•		•	•	•	•	•	•
ecocirc XL 70-145	•			•		•			•	•	•	•	•	•
ecocirc XL 40-275		•		•				•	•	•	•	•	•	•

*304 stainless steel body - certified to NSF 372.
• Small Booster (2 bolts) has a bolt hole to bolt hole dimension of 3-3/16".
• Large Booster (2 bolts) has a bolt hole to bolt hole dimension of 3-7/16".

Product nomenclature

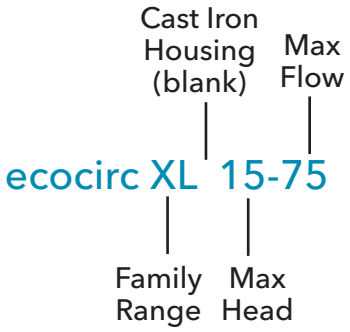

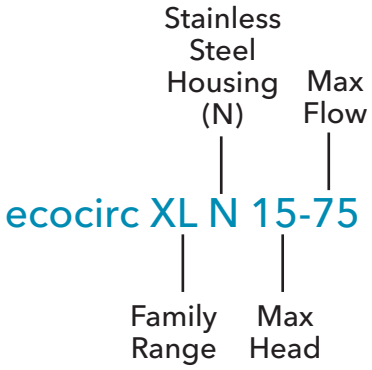

Service and support from the most trusted name in the industry – Bell & Gossett.

The Bell & Gossett name has always stood for uncompromising quality and dependability. That's evident in the way every one of our centrifugal pumps is built and backed by our outstanding customer service and support team.

Your local Bell & Gossett representative is available any time and is an experienced professional with a wealth of technical expertise. In addition to expert system and product application assistance and a wide product inventory warehoused locally, we offer ESP-Systemwize software selection program.

ESP-Systemwize is a Bell & Gossett web-based software that helps you design HVAC systems accurately, effectively and very quickly. You get fast, precise equipment selection, pump performance curves and equipment schedules, submittals, specifications and more.

ESP-Systemwize includes:

- Centrifugal Pumps
- Air/Dirt Separators
- Heat Exchangers
- Pump Suction Diffuser and Triple Duty Valve
- Expansion Tanks
- PIC Valves

The Little Red Schoolhouse® - Training the Industry

Seminars currently offered are:

- Modern Hydronic System Design – Basic*
- Modern Hydronic System Design – Advanced*
- Design & Application of Water Based HVAC Systems
- Large Chilled Water System Design*
- Pump Service & Maintenance School
- Steam Systems Design & Applications
- Steam System Operation & Maintenance
- Plumbing Systems Design

Bell & Gossett has long been known for its dedication to training. The "Little Red Schoolhouse®" has graduated over 60,000 students since it was founded in 1954.

Graduates from the "Little Red Schoolhouse" may be found throughout North America, Europe, Africa, Asia and Australia.

For applications to attend these seminars, please contact a Bell & Gossett Representative in your area. They will have the schedule dates for all seminars and will make all the arrangements for you. As a service and a continuing educational source to the HVAC industry, these seminars are offered free of charge. IACET certified CEU credits are awarded for each seminar.

* The USGBC has approved the technical and instructional quality of the Modern Hydronic Heating Systems - Basic Seminar (15 GBCI CE Hours) and the Large Chilled Water Design Seminar (11 GBCI CE Hours). These courses are approved for GBCI Continuing Education Hours towards LEED Credential Maintenance Programs.

Member of: HI

Xylem |ˈzīləm|

1) The tissue in plants that brings water upward from the roots;
2) a leading global water technology company.

We're a global team unified in a common purpose: creating advanced technology solutions to the world's water challenges. Developing new technologies that will improve the way water is used, conserved, and re-used in the future is central to our work. Our products and services move, treat, analyze, monitor and return water to the environment, in public utility, industrial, residential and commercial building services, and agricultural settings. With its October 2016 acquisition of Sensus, Xylem added smart metering, network technologies and advanced data analytics for water, gas and electric utilities to its portfolio of solutions. In more than 150 countries, we have strong, long-standing relationships with customers who know us for our powerful combination of leading product brands and applications expertise with a strong focus on developing comprehensive, sustainable solutions.

For more information on how Xylem can help you, go to www.xyleminc.com

We value your feedback. Please take our 3 question survey at **bellgossett.com/survey** to let us know how we are doing.

xylem
Let's Solve Water

Xylem Inc.
8200 N. Austin Avenue
Morton Grove, Illinois 60053
Phone: (847) 966-3700
Fax: (847) 965-8379
www.bellgossett.com

Bell & Gossett is a trademark of Xylem Inc. or one of its subsidiaries.
© 2017 Xylem Inc. A-162C October 2017