GRAND JUNCTION Winwater COMPANY

Customer Name

Job Name Line 1

Job Name Line 2

Materials Submittal Index

Materials List

Bid Item	Manufacturer	# of Pages
	Manufacturer	# of Pages
	Manufacturer	# of Pages
	Manufacturer	# of Pages
	Manufacturer	# of Pages
	Manufacturer	# of Pages
	Manufacturer	# of Pages
	Manufacturer	# of Pages

GRAND JUNCTION Winwater COMPANY

Customer Name

Job Name Line 1

Job Name Line 2

Materials Submittal Index

Materials List

	Manufacturer	# of Pages
	Manufacturer	# of Pages
	Manufacturer	# of Pages
	Manufacturer	# of Pages
	Manufacturer	# of Pages
	Manufacturer	# of Pages
	Manufacturer	# of Pages
	Manufacturer	# of Pages

Customer Name

Job Name Line 1
Job Name Line 2

Materials Submittal Index

Materials List

Pressure Reducing Valve — 2" Flanged	Watts	2
Pressure Reducing Valve — 3/4" Threaded	Watts	2

Pressure Reducing Valve — 2" Flanged

Watts LF25AUB-GG-Z3

D-701A – 19”x30” Elliptical Pipe Culvert

Taxiway B
P-701B – Elliptical Pipe Flared End Sections

Taxiway B
P-701C & P-701E – 18” & 24” RCP
Pipe Culvert

Taxiway B
P-701D – 18” RCP Pipe Flared End Sections

Taxiway B
D-701f 12” HDPE Pipe Culvert

Taxiway B
D-701g 12” HDPE Pipe End Section

Taxiway B
D-705A – 6” Pipe Underdrain

Taxiway B
D-705B – 6” Solid Drain Pipe

Taxiway B
D-751A - Inlet

Taxiway B
D-751B – Manhole

Taxiway G
P-701C – 18” RCP

Taxiway G
D-751A – Inlet

Taxiway G
D-705A & D-705B – 6” Perforated and Solid Pipe Underdrain

Taxiway G
D-705C – Infiltration Basin

#70 Steel Casing

#71 – 24” Pipe CWD

#72 – 24” MJ BFV

#73 – Hydrant Connection

Series LF25AUB-Z3

Water Pressure Reducing Valves**

Sizes: ½"– 2" (15 – 50mm)

LEAD FREE* Series LF25AUB-Z3 Water Pressure Reducing Valves are designed to reduce incoming water pressure to a sensible level to protect plumbing system components and reduce water consumption. This series is suitable for water supply pressures up to 300psi (20.7 bar) and may be adjusted from 25 – 75psi (172 – 517 kPa). The LF25AUB-Z3 features Lead Free* construction to comply with Lead Free* installation requirements. The standard setting is 50psi (345 kPa). All parts are quickly and easily serviceable without removing the valve from the line. The standard bypass feature*** permits the flow of water back through the valve into the main when pressures, due to thermal expansion on the outlet side of the valve, exceed the pressure in the main supply.

LF25AUBZ3

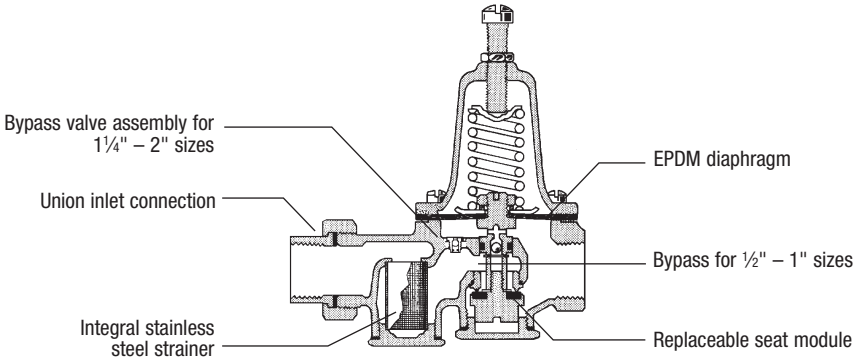

Features

- Standard construction includes Z3 sealed spring cage and stainless steel corrosion resistant adjusting & cage screws for accessible outdoor or pit installations
- Union inlet connection
- Integral stainless steel strainer
- Replaceable seat module
- Lead Free* cast copper silicon alloy construction
- Serviceable in line
- Bypass feature controls thermal expansion pressure***
- High temperature resistant reinforced diaphragm for hot water

Models

LF25AUB-Z3 NPT threaded female union inlet x NPT female outlet

LF25AUB-S-Z3 Solder union inlet x NPT female outlet

LF25AUB-DU-Z3 Double Union – NPT threaded union female inlet and outlet

LF25AUB-S-DU-Z3 Double Union – Solder union inlet and outlet

LF25AUB-DU-THDxPEX-Z3 Double Union – NPT threaded female inlet and PEX union outlet

LF25AUB-DU-LF-Z3 Double union body less fittings (¾", 1", 1¼")

LF25AUB-QC-Z3 Single Union – Quick-Connect union inlet (½", ¾", 1")

LF25AUB-DU-QC-Z3 Double Union – Quick-Connect inlet and outlet (½", ¾", 1")

Options

add Suffix:

GG - Gauge tapping, ⅛" (3mm)

GG - Gauge tapping and 160psi (11 bar) gauge

HP† - High pressure range 75–125psi (5.2 – 8.6 bar)

LP† - Low pressure range 10–35psi (69 – 241 kPa)

Z7 - 400psi (27.6 bar) initial pressure, ½" (20mm) models only

Pressure – Temperature

Temperature Range: 33°F – 160°F (0.5°C – 71°C)

Maximum Working Pressure: 300psi (20.7 bar)

Adjustable Reduced Pressure Range: 25–75psi (172 – 517 kPa)

Standard Reduced Pressure Setting: 50psi (345 kPa)

Standards

Meets requirements of ASSE Standard 1003: ANSI A112.26.2: CSA Standard B356; Southern Standard Plumbing Code and listed by IAPMO.
Military Standard MIL-V-18146B Type I.

*The wetted surface of this product contacted by consumable water contains less than 0.25% of lead by weight.
**A water saving test program concluded that reducing the supply pressure from 80-50psi (551-345 kPa) resulted in a water savings of 30%.
***The bypass feature will not prevent the pressure relief valve from opening on the hot water supply system with pressure above 150psi (10.3 bar).
†Currently not available with G or GG options.

Capacity

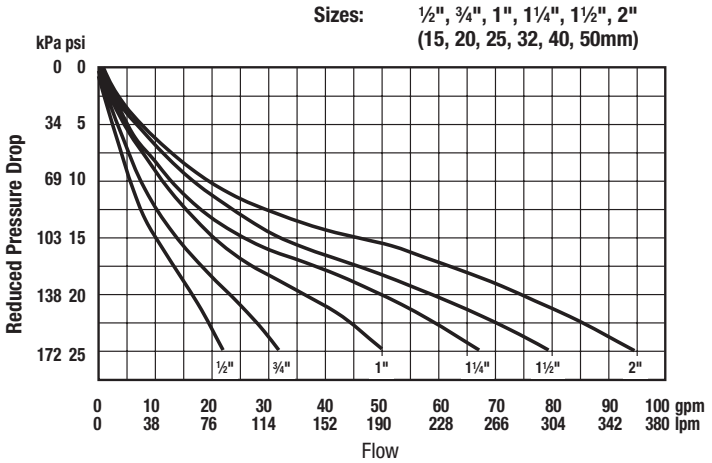

Dimensions — Weights

A - LF25AUB-Z3
A1 - LF25AUB-S-Z3
A2 - LF25AUB-DU-LF-Z3
B - LF25AUB-DU-Z3
B1 - LF25AUB-S-DU-Z3
B2 - LF25AUB-DU-THDxPEX-Z3
ET - NPT Engagement for tight joint
ES - Female sweat socket depth
EP - PEX end connection
FQC - Quick-Connect union

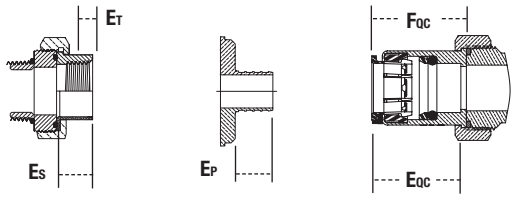

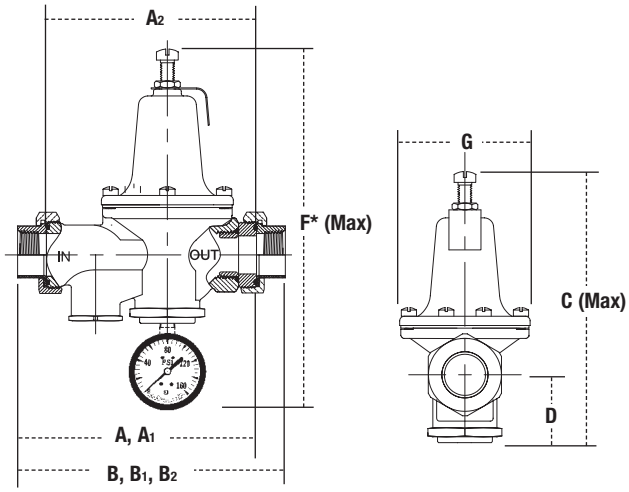

SIZE (DN)		DIMENSIONS													
		A		A_1		A_2		B		B_1		B_2		C	
in.	mm	in.	mm	in.	mm	in.	mm	in.	mm	in.	mm	in.	mm	in.	mm
½	15	5⅜	137	5 5/16	135	5 3/16	132	6 7/16	164	6⅜	162	–	–	7	178
¾	20	5 5/16	135	5½	140	5¼	133	6½	165	6⅞	175	6¾	171	7	178
1	25	6	152	6¼	159	5⅞	149	7⅜	187	7 13/16	198	7 11/16	195	8	203
1¼	32	8¾	222	8 15/16	227	8¼	210	10¾	273	11	279	–	–	9	229
1½	40	8¾	222	9	229	8¼	210	10¾	273	11 3/16	284	–	–	9½	241
2	50	9¼	235	10	254	8¾	222	11 5/16	287	12 11/16	322	–	–	11¼	286

SIZE (DN)		DIMENSIONS												WEIGHT	
D		F *		G		E_T		E_S		E_P		F_{QC}			
in.	mm	in.	mm	in.	mm	in.	mm	in.	mm	in.	mm	in.	mm	lbs.	kgs.
1½	38	9 7/16	240	3⅛	79	½	13	½	13	–	–	1½	38	3.5	1.6
1½	38	9 7/16	240	3⅛	79	½	13	¾	19	⅝	16	1 11/16	42	3.5	1.6
1¾	44	10 7/16	266	3⅝	92	⅝	16	15/16	23	13/16	21	1¾	45	6.5	3.0
2⅛	54	11 7/16	291	3⅝	92	⅝	16	1	25	–	–	–	–	10	4.5
2⅜	60	11 15/16	304	4 1/16	103	⅝	16	1 1/16	28	–	–	–	–	10	4.5
3¼	83	13 11/16	348	4¾	121	⅝	16	1 5/16	34	–	–	–	–	15	6.8

* Dimension includes optional gauge

For additional information, reference literature ES-LF25AUB.

Pressure Reducing Valve — 3/4" Threaded

Watts LF25AUB-Z3

D-701A – 19”x30” Elliptical Pipe Culvert

Taxiway B
P-701B – Elliptical Pipe Flared End Sections

Taxiway B
P-701C & P-701E – 18” & 24” RCP
Pipe Culvert

Taxiway B
P-701D – 18” RCP Pipe Flared End Sections

Taxiway B
D-701f 12” HDPE Pipe Culvert

Taxiway B
D-701g 12” HDPE Pipe End Section

Taxiway B
D-705A – 6” Pipe Underdrain

Taxiway B
D-705B – 6” Solid Drain Pipe

Taxiway B
D-751A - Inlet

Taxiway B
D-751B – Manhole

Taxiway G
P-701C – 18” RCP

Taxiway G
D-751A – Inlet

Taxiway G
D-705A & D-705B – 6” Perforated and Solid Pipe Underdrain

Taxiway G
D-705C – Infiltration Basin

#70 Steel Casing

#71 – 24” Pipe CWD

#72 – 24” MJ BFV

#73 – Hydrant Connection

Series LF25AUB-Z3

Water Pressure Reducing Valves**

Sizes: ½"– 2" (15 – 50mm)

LEAD FREE* Series LF25AUB-Z3 Water Pressure Reducing Valves are designed to reduce incoming water pressure to a sensible level to protect plumbing system components and reduce water consumption. This series is suitable for water supply pressures up to 300psi (20.7 bar) and may be adjusted from 25 – 75psi (172 – 517 kPa). The LF25AUB-Z3 features Lead Free* construction to comply with Lead Free* installation requirements. The standard setting is 50psi (345 kPa). All parts are quickly and easily serviceable without removing the valve from the line. The standard bypass feature*** permits the flow of water back through the valve into the main when pressures, due to thermal expansion on the outlet side of the valve, exceed the pressure in the main supply.

LF25AUBZ3

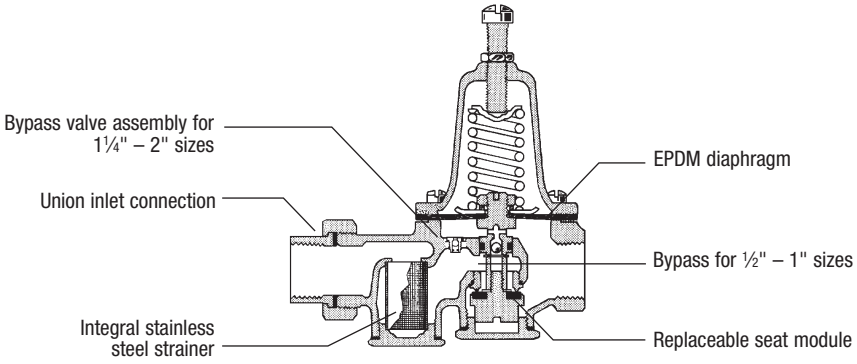

Features

- Standard construction includes Z3 sealed spring cage and stainless steel corrosion resistant adjusting & cage screws for accessible outdoor or pit installations
- Union inlet connection
- Integral stainless steel strainer
- Replaceable seat module
- Lead Free* cast copper silicon alloy construction
- Serviceable in line
- Bypass feature controls thermal expansion pressure***
- High temperature resistant reinforced diaphragm for hot water

Models

LF25AUB-Z3 NPT threaded female union inlet x NPT female outlet

LF25AUB-S-Z3 Solder union inlet x NPT female outlet

LF25AUB-DU-Z3 Double Union – NPT threaded union female inlet and outlet

LF25AUB-S-DU-Z3 Double Union – Solder union inlet and outlet

LF25AUB-DU-THDxPEX-Z3 Double Union – NPT threaded female inlet and PEX union outlet

LF25AUB-DU-LF-Z3 Double union body less fittings (¾", 1", 1¼")

LF25AUB-QC-Z3 Single Union – Quick-Connect union inlet (½", ¾", 1")

LF25AUB-DU-QC-Z3 Double Union – Quick-Connect inlet and outlet (½", ¾", 1")

Options

add Suffix:

GG - Gauge tapping, ⅛" (3mm)

GG - Gauge tapping and 160psi (11 bar) gauge

HP† - High pressure range 75–125psi (5.2 – 8.6 bar)

LP† - Low pressure range 10–35psi (69 – 241 kPa)

Z7 - 400psi (27.6 bar) initial pressure, ½" (20mm) models only

Pressure – Temperature

Temperature Range: 33°F – 160°F (0.5°C – 71°C)

Maximum Working Pressure: 300psi (20.7 bar)

Adjustable Reduced Pressure Range: 25–75psi (172 – 517 kPa)

Standard Reduced Pressure Setting: 50psi (345 kPa)

Standards

Meets requirements of ASSE Standard 1003: ANSI A112.26.2: CSA Standard B356; Southern Standard Plumbing Code and listed by IAPMO.
Military Standard MIL-V-18146B Type I.

*The wetted surface of this product contacted by consumable water contains less than 0.25% of lead by weight.
**A water saving test program concluded that reducing the supply pressure from 80-50psi (551-345 kPa) resulted in a water savings of 30%.
***The bypass feature will not prevent the pressure relief valve from opening on the hot water supply system with pressure above 150psi (10.3 bar).
†Currently not available with G or GG options.

Capacity

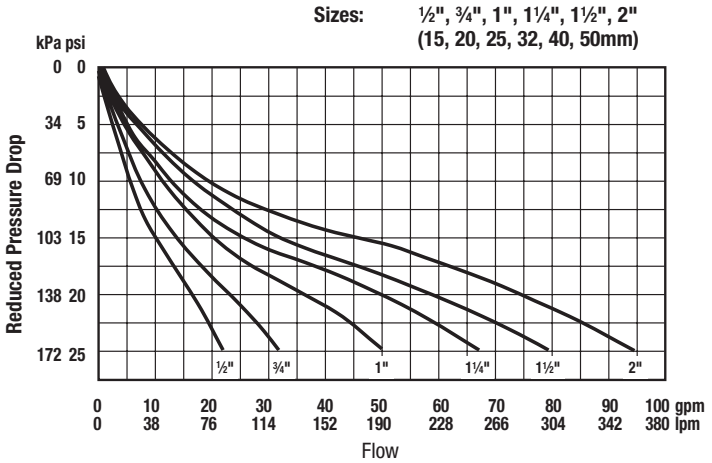

Dimensions — Weights

A - LF25AUB-Z3
A1 - LF25AUB-S-Z3
A2 - LF25AUB-DU-LF-Z3
B - LF25AUB-DU-Z3
B1 - LF25AUB-S-DU-Z3
B2 - LF25AUB-DU-THDxPEX-Z3
ET - NPT Engagement for tight joint
ES - Female sweat socket depth
EP - PEX end connection
FQC - Quick-Connect union

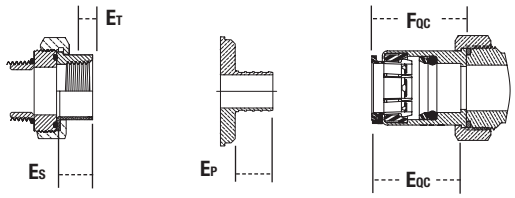

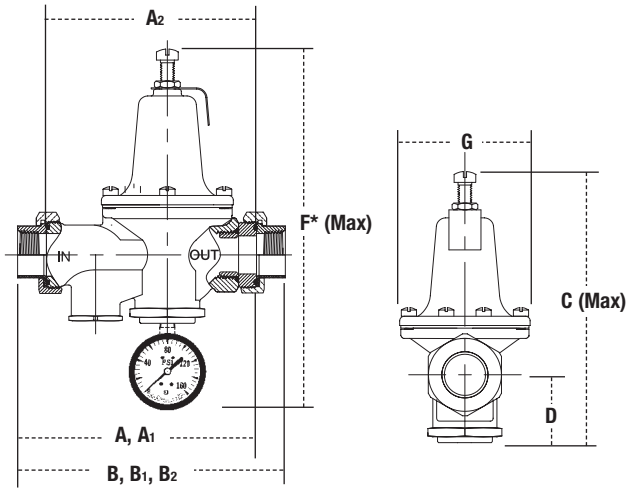

SIZE (DN)		DIMENSIONS													
		A		A_1		A_2		B		B_1		B_2		C	
in.	mm	in.	mm	in.	mm	in.	mm	in.	mm	in.	mm	in.	mm	in.	mm
½	15	5⅜	137	5 5/16	135	5 3/16	132	6 7/16	164	6⅜	162	–	–	7	178
¾	20	5 5/16	135	5½	140	5¼	133	6½	165	6⅞	175	6¾	171	7	178
1	25	6	152	6¼	159	5⅞	149	7⅜	187	7 13/16	198	7 11/16	195	8	203
1¼	32	8¾	222	8 15/16	227	8¼	210	10¾	273	11	279	–	–	9	229
1½	40	8¾	222	9	229	8¼	210	10¾	273	11 3/16	284	–	–	9½	241
2	50	9¼	235	10	254	8¾	222	11 5/16	287	12 11/16	322	–	–	11¼	286

SIZE (DN)		DIMENSIONS												WEIGHT	
D		F *		G		E_T		E_S		E_P		F_{QC}			
in.	mm	in.	mm	in.	mm	in.	mm	in.	mm	in.	mm	in.	mm	lbs.	kgs.
1½	38	9 7/16	240	3⅛	79	½	13	½	13	–	–	1½	38	3.5	1.6
1½	38	9 7/16	240	3⅛	79	½	13	¾	19	⅝	16	1 11/16	42	3.5	1.6
1¾	44	10 7/16	266	3⅝	92	⅝	16	15/16	23	13/16	21	1¾	45	6.5	3.0
2⅛	54	11 7/16	291	3⅝	92	⅝	16	1	25	–	–	–	–	10	4.5
2⅜	60	11 15/16	304	4 1/16	103	⅝	16	1 1/16	28	–	–	–	–	10	4.5
3¼	83	13 11/16	348	4¾	121	⅝	16	1 5/16	34	–	–	–	–	15	6.8

* Dimension includes optional gauge

For additional information, reference literature ES-LF25AUB.