GRAND JUNCTION Winwater COMPANY

Customer Name

Job Name Line 1

Job Name Line 2

Materials Submittal Index

Materials List

Bid Item	Manufacturer	# of Pages
	Manufacturer	# of Pages
	Manufacturer	# of Pages
	Manufacturer	# of Pages
	Manufacturer	# of Pages
	Manufacturer	# of Pages
	Manufacturer	# of Pages
	Manufacturer	# of Pages

GRAND JUNCTION Winwater COMPANY

Customer Name

Job Name Line 1

Job Name Line 2

Materials Submittal Index

Materials List

	Manufacturer	# of Pages
	Manufacturer	# of Pages
	Manufacturer	# of Pages
	Manufacturer	# of Pages
	Manufacturer	# of Pages
	Manufacturer	# of Pages
	Manufacturer	# of Pages
	Manufacturer	# of Pages

Customer Name

Job Name Line 1

Job Name Line 2

Materials Submittal Index

Materials List

Ball Valve — 2" Full Port Lead-Free	Apollo	1
Ball Valve — 3/4" Full Port Lead-Free	Apollo	1

Ball Valve — 2" Full Port Lead-Free

Apollo 94ALF-200

D-701A – 19”x30” Elliptical Pipe Culvert

Taxiway B
P-701B – Elliptical Pipe Flared End Sections

Taxiway B
P-701C & P-701E – 18” & 24” RCP
Pipe Culvert

Taxiway B
P-701D – 18” RCP Pipe Flared End Sections

Taxiway B
D-701f 12” HDPE Pipe Culvert

Taxiway B
D-701g 12” HDPE Pipe End Section

Taxiway B
D-705A – 6” Pipe Underdrain

Taxiway B
D-705B – 6” Solid Drain Pipe

Taxiway B
D-751A - Inlet

Taxiway B
D-751B – Manhole

Taxiway G
P-701C – 18” RCP

Taxiway G
D-751A – Inlet

Taxiway G
D-705A & D-705B – 6” Perforated and Solid Pipe Underdrain

Taxiway G
D-705C – Infiltration Basin

#70 Steel Casing

#71 – 24” Pipe CWD

#72 – 24” MJ BFV

#73 – Hydrant Connection

"Apollo" Valves
SUBMITTAL SHEET

94ALF-A Series
Full Port Brass Ball Valve

LEAD FREE

Job Name:	
Job Location:	
Engineer:	
Contractor:	
Tag:	
PO#:	
Rep:	
Wholesale Dist.:	

DESCRIPTION
The **Apollo InternationalTM 94ALF-A Lead Free* Forged Brass Ball Valve** combines reliable operation with maximum economy. Featuring multi-agency approvals, the 94ALF-A is ideal for gas, fuels, fire protection and general plumbing and HVAC applications including potable water. Valves are ANSI 3rd party lead free* certified.

FEATURES
- EZ SolderTM Lead Free Materials**
- Distinctive White "Lead Free" Handle Grip
- 2-Piece, Full Port Design
- Blowout-Proof Stem
- 100% Factory Testing
- Adjustable Stem Packing Nut
- Multiple Agency Approvals
- Stem Seal O-Ring (Solder Version 1/2" - 2")

PERFORMANCE RATING
- 600 CWP – 1/4" to 2"
- 400 CWP – 2-1/2" to 4"
- Temperature Range: 0°F to 400°F

APPROVALS
- MSS SP-110 - Ball Valves
- NSF/ANSI 61 Water Quality
- NSF/ANSI 372 Lead Free
- IAPMO IGC 157 (cUPC)

CSA LISTED
- (File # 226234) per the following standards:
- ANSI Z21.15 (1/2 psi) (CSA 9.1) (1/4" – 2")
- ASME B16.44 (5 psi) (CR91-002) (1/4" – 2")
- ASME B16.33 (125 psi) (CGA 3.16) (1/4" – 2"

UL LISTED
- Guides YQNZ, YRBX, YRPV, YSDT and MHKZ (1/4" - 4" NPT only)
- UL 258 – VQGU Fire Protection Trim & Drain 175psi max (1/4" – 2")

FM LISTED
- FM 1140 Fire Protection Quick Opening Valves

Gas approvals apply to NPT models only

STANDARD MATERIALS LIST

BODY	Lead Free Brass (DZR)
RETAINER	Lead Free Brass (DZR)
BALL 1/4" - 1"	Lead Free Brass (DZR), Chr. Plated
BALL 1-1/4"- 4"	SS Type 316
STEM	Brass C36000
STEM SEAL/O-RING	EPDM
SEATS	PTFE
STEM PACKING	PTFE
GLAND NUT	Brass, C37700
SEAL	PTFE
HANDLE	Steel, Plated (with PVC grip)
HANDLE NUT	Steel, Plated

94ALF-2xx intended for soft solder installation using solders with melting temperature < 500°F.

DIMENSIONS

PART NUMBER	SIZE (IN.)	DIMENSIONS (IN.)					WT. (LB.)	KIT OPTIONS	
		A	B	C	D	E		2-1/4" STEM EXTENSION + MEMORY STOP	REPLACEMENT LEVER HANDLES
NPT									
94ALF-101-01A	1/4"	0.39	1.76	1.73	3.54	-	0.3	78217101	W234700
94ALF-102-01A	3/8"	0.39	1.76	1.73	3.54	-	0.3		
94ALF-103-01A	1/2"	0.58	2.05	2.04	3.54	-	0.4	78217201	W234800
94ALF-104-01A	3/4"	0.75	2.36	2.26	3.78	-	0.7	78217301	W234900
94ALF-105-01A	1"	0.95	2.76	2.58	4.53	-	1.1	78217401	W235000
94ALF-106-01A	1-1/4"	1.26	3.31	3.05	4.53	-	1.6	78217501	W235100
94ALF-107-01A	1-1/2"	1.58	3.66	3.37	5.51	-	2.4	78217601	W235200
94ALF-108-01A	2"	1.97	4.18	3.70	6.30	-	3.4		W283000
94ALF-109-01A	2-1/2"	2.52	5.38	4.65	8.66	-	7.6	78217701	W235300
94ALF-100-01A	3"	2.95	6.04	4.97	8.66	-	9.3		
94ALF-10A-01A	4"	3.95	7.39	6.13	11.02	-	16.9	78217801	W273800
SOLDER									
94ALF-203-01A	1/2"	0.58	2.05	1.84	3.54	0.63	0.4	78217201	W234800
94ALF-204-01A	3/4"	0.75	2.75	2.14	3.78	0.88	0.7	78217301	W234900
94ALF-205-01A	1"	0.95	3.31	2.45	4.53	1.13	1.1	78217401	W235000
94ALF-206-01A	1-1/4"	1.26	3.82	3.04	4.53	1.38	1.4	78217501	W235100
94ALF-207-01A	1-1/2"	1.58	4.43	3.17	5.51	1.63	2.2	78217601	W235200
94ALF-208-01A	2"	1.97	5.38	3.49	6.30	2.13	3.0		W283000
94ALF-209-01A	2-1/2"	2.52	6.28	4.66	8.66	2.63	6.4	78217701	W235300
94ALF-200-01A	3"	2.95	7.15	4.87	8.66	3.13	8.5		
94ALF-20A-01A	4"	3.95	9.28	5.87	11.02	4.13	15.8	78217801	W273800

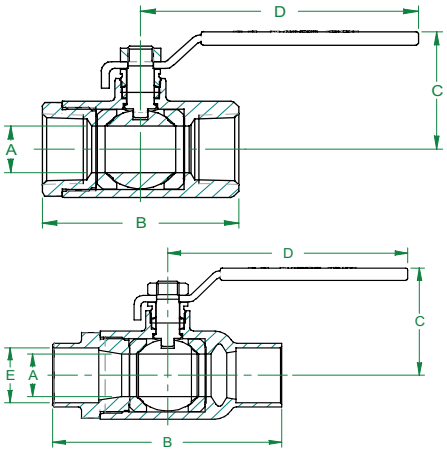

LEAD FREE: The wetted surfaces of this product shall contain no more than 0.25% lead by weighted average. Complies with Federal Public Law 111-380. ANSI 3rd party approved and listed.

This specification is provided for reference only. Apollo reserves the right to change any portion of this specification without notice and without incurring obligation to make such changes to Apollo products previously or subsequently sold. Most current information available at apollovalves.com.

aalberts integrated piping systems

Ball Valve — 3/4" Full Port Lead-Free

Apollo 94ALF-100

D-701A – 19”x30” Elliptical Pipe Culvert

Taxiway B
P-701B – Elliptical Pipe Flared End Sections

Taxiway B
P-701C & P-701E – 18” & 24” RCP
Pipe Culvert

Taxiway B
P-701D – 18” RCP Pipe Flared End Sections

Taxiway B
D-701f 12” HDPE Pipe Culvert

Taxiway B
D-701g 12” HDPE Pipe End Section

Taxiway B
D-705A – 6” Pipe Underdrain

Taxiway B
D-705B – 6” Solid Drain Pipe

Taxiway B
D-751A - Inlet

Taxiway B
D-751B – Manhole

Taxiway G
P-701C – 18” RCP

Taxiway G
D-751A – Inlet

Taxiway G
D-705A & D-705B – 6” Perforated and Solid Pipe Underdrain

Taxiway G
D-705C – Infiltration Basin

#70 Steel Casing

#71 – 24” Pipe CWD

#72 – 24” MJ BFV

#73 – Hydrant Connection

"Apollo" Valves
SUBMITTAL SHEET

94ALF-A Series
Full Port Brass Ball Valve

LEAD FREE

Job Name:	
Job Location:	
Engineer:	
Contractor:	
Tag:	
PO#:	
Rep:	
Wholesale Dist.:	

DESCRIPTION
The **Apollo InternationalTM 94ALF-A Lead Free* Forged Brass Ball Valve** combines reliable operation with maximum economy. Featuring multi-agency approvals, the 94ALF-A is ideal for gas, fuels, fire protection and general plumbing and HVAC applications including potable water. Valves are ANSI 3rd party lead free* certified.

FEATURES
- EZ SolderTM Lead Free Materials**
- Distinctive White "Lead Free" Handle Grip
- 2-Piece, Full Port Design
- Blowout-Proof Stem
- 100% Factory Testing
- Adjustable Stem Packing Nut
- Multiple Agency Approvals
- Stem Seal O-Ring (Solder Version 1/2" - 2")

PERFORMANCE RATING
- 600 CWP – 1/4" to 2"
- 400 CWP – 2-1/2" to 4"
- Temperature Range: 0°F to 400°F

APPROVALS
- MSS SP-110 - Ball Valves
- NSF/ANSI 61 Water Quality
- NSF/ANSI 372 Lead Free
- IAPMO IGC 157 (cUPC)

CSA LISTED
- (File # 226234) per the following standards:
- ANSI Z21.15 (1/2 psi) (CSA 9.1) (1/4" – 2")
- ASME B16.44 (5 psi) (CR91-002) (1/4" – 2")
- ASME B16.33 (125 psi) (CGA 3.16) (1/4" – 2"

UL LISTED
- Guides YQNZ, YRBX, YRPV, YSDT and MHKZ (1/4" - 4" NPT only)
- UL 258 – VQGU Fire Protection Trim & Drain 175psi max (1/4" – 2")

FM LISTED
- FM 1140 Fire Protection Quick Opening Valves

Gas approvals apply to NPT models only

STANDARD MATERIALS LIST

BODY	Lead Free Brass (DZR)
RETAINER	Lead Free Brass (DZR)
BALL 1/4" - 1"	Lead Free Brass (DZR), Chr. Plated
BALL 1-1/4"- 4"	SS Type 316
STEM	Brass C36000
STEM SEAL/O-RING	EPDM
SEATS	PTFE
STEM PACKING	PTFE
GLAND NUT	Brass, C37700
SEAL	PTFE
HANDLE	Steel, Plated (with PVC grip)
HANDLE NUT	Steel, Plated

94ALF-2xx intended for soft solder installation using solders with melting temperature < 500°F.

DIMENSIONS

PART NUMBER	SIZE (IN.)	DIMENSIONS (IN.)					WT. (LB.)	KIT OPTIONS	
		A	B	C	D	E		2-1/4" STEM EXTENSION + MEMORY STOP	REPLACEMENT LEVER HANDLES
NPT									
94ALF-101-01A	1/4"	0.39	1.76	1.73	3.54	-	0.3	78217101	W234700
94ALF-102-01A	3/8"	0.39	1.76	1.73	3.54	-	0.3		
94ALF-103-01A	1/2"	0.58	2.05	2.04	3.54	-	0.4	78217201	W234800
94ALF-104-01A	3/4"	0.75	2.36	2.26	3.78	-	0.7	78217301	W234900
94ALF-105-01A	1"	0.95	2.76	2.58	4.53	-	1.1	78217401	W235000
94ALF-106-01A	1-1/4"	1.26	3.31	3.05	4.53	-	1.6	78217501	W235100
94ALF-107-01A	1-1/2"	1.58	3.66	3.37	5.51	-	2.4	78217601	W235200
94ALF-108-01A	2"	1.97	4.18	3.70	6.30	-	3.4		W283000
94ALF-109-01A	2-1/2"	2.52	5.38	4.65	8.66	-	7.6	78217701	W235300
94ALF-100-01A	3"	2.95	6.04	4.97	8.66	-	9.3		
94ALF-10A-01A	4"	3.95	7.39	6.13	11.02	-	16.9	78217801	W273800
SOLDER									
94ALF-203-01A	1/2"	0.58	2.05	1.84	3.54	0.63	0.4	78217201	W234800
94ALF-204-01A	3/4"	0.75	2.75	2.14	3.78	0.88	0.7	78217301	W234900
94ALF-205-01A	1"	0.95	3.31	2.45	4.53	1.13	1.1	78217401	W235000
94ALF-206-01A	1-1/4"	1.26	3.82	3.04	4.53	1.38	1.4	78217501	W235100
94ALF-207-01A	1-1/2"	1.58	4.43	3.17	5.51	1.63	2.2	78217601	W235200
94ALF-208-01A	2"	1.97	5.38	3.49	6.30	2.13	3.0		W283000
94ALF-209-01A	2-1/2"	2.52	6.28	4.66	8.66	2.63	6.4	78217701	W235300
94ALF-200-01A	3"	2.95	7.15	4.87	8.66	3.13	8.5		
94ALF-20A-01A	4"	3.95	9.28	5.87	11.02	4.13	15.8	78217801	W273800

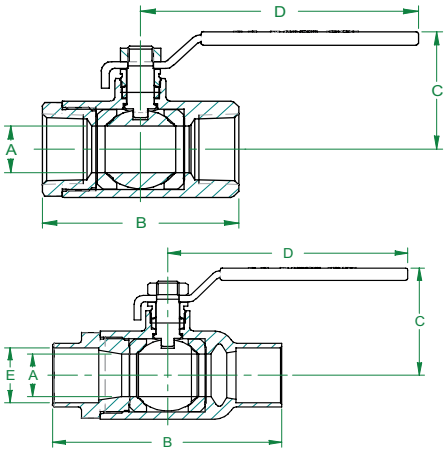

LEAD FREE: The wetted surfaces of this product shall contain no more than 0.25% lead by weighted average. Complies with Federal Public Law 111-380. ANSI 3rd party approved and listed.

This specification is provided for reference only. Apollo reserves the right to change any portion of this specification without notice and without incurring obligation to make such changes to Apollo products previously or subsequently sold. Most current information available at apollovalves.com.

aalberts integrated piping systems