GRAND JUNCTION Winwater COMPANY

Customer Name

Job Name Line 1

Job Name Line 2

Materials Submittal Index

Materials List

Bid Item	Manufacturer	# of Pages
	Manufacturer	# of Pages
	Manufacturer	# of Pages
	Manufacturer	# of Pages
	Manufacturer	# of Pages
	Manufacturer	# of Pages
	Manufacturer	# of Pages
	Manufacturer	# of Pages

GRAND JUNCTION Winwater COMPANY

Customer Name

Job Name Line 1

Job Name Line 2

Materials Submittal Index

Materials List

	Manufacturer	# of Pages
	Manufacturer	# of Pages
	Manufacturer	# of Pages
	Manufacturer	# of Pages
	Manufacturer	# of Pages
	Manufacturer	# of Pages
	Manufacturer	# of Pages
	Manufacturer	# of Pages

GRAND JUNCTION Winwater COMPANY

Customer Name

Job Name Line 1

Job Name Line 2

Materials Submittal Index

Materials List

Gas-Fired Storage Water Heater — 100 Gal	A.O. Smith	4
Thermostatic Mixing Valve — 2"	Watts	1
Expansion Tank — 40 Gal Pre-Charged	Watts	2
T&P Relief Valve — 3/4" x 1" 150 PSI / 210°F	Watts	2

Gas-Fired Storage Water Heater — 100 Gal
A.O. Smith BTH-500A
D-701A – 19”x30” Elliptical Pipe Culvert

Taxiway B
P-701B – Elliptical Pipe Flared End Sections

Taxiway B
P-701C & P-701E – 18” & 24” RCP
Pipe Culvert

Taxiway B
P-701D – 18” RCP Pipe Flared End Sections

Taxiway B
D-701f 12” HDPE Pipe Culvert

Taxiway B
D-701g 12” HDPE Pipe End Section

Taxiway B
D-705A – 6” Pipe Underdrain

Taxiway B
D-705B – 6” Solid Drain Pipe

Taxiway B
D-751A - Inlet

Taxiway B
D-751B – Manhole

Taxiway G
P-701C – 18” RCP

Taxiway G
D-751A – Inlet

Taxiway G
D-705A & D-705B – 6” Perforated and Solid Pipe Underdrain

Taxiway G
D-705C – Infiltration Basin

#70 Steel Casing

#71 – 24” Pipe CWD

#72 – 24” MJ BFV

#73 – Hydrant Connection

Commercial Gas Water Heaters

Cyclone® Mxi MODULATING

BTH-120(A) through BTH-500(A)

MODULATING BURNER ADVANCES THE CYCLONE TO HIGHER LEVELS OF EFFICIENCY

FEATURES

The full line of A. O. Smith Cyclone Mxi condensing water heaters has been designed to provide years of dependable service and feature industry leading technology. Models are available from 120,000 to 500,000 Btu/h and all deliver thermal efficiencies of 95% and higher. The unique helical coil heat exchanger limits weld joints for optimal service life while maximizing heat transfer.

Cyclone is the industry leader in high efficiency commercial water heating with over a quarter million Cyclones sold since 1996. The current Mxi modulating models adjust firing rate to the specific demand further increasing efficiency and money savings.

INTELLIGENT CONTROL SYSTEM WITH LCD DISPLAY
- Exclusive A. O. Smith designed control system
- Provides detailed water heater status information
- Precise temperature control adjustable from 90 to 180 degrees
- Built-in diagnostics
- Run history information
- Cyclone water heaters are compatible with the iCOMM™ remote monitoring system. Call 1.888.928.3702 for more information.

This model is iCOMM COMPATIBLE. iCOMM For info call: 1-888-WATER02

1.888.WATER02

SUBMERGED COMBUSTION CHAMBER, WITH HELICAL HEAT EXCHANGER COIL
- Positioned in center of tank, surrounded by water to virtually eliminate radiant heat loss from chamber
- Direct spark ignition
- Spiral heat exchanger keeps hot burner gases swirling, uses centrifugal force to maximize efficiency of heat transfer to water in tank
- Spiral heat exchanger reduces lime scale from forming on water-side surfaces, which maintains energy efficiency over time

POWERED ANODES STANDARD ON ALL MODELS
- Provides long-lasting tank protection in varying water conditions
- Powered anodes are non-sacrificial
- Automatically adjusts output needed to properly protect the tank

PERMAGLAS® ULTRA COAT™ GLASS LINING
- Glass coating is applied using a liquid slush coating technique to ensure uniform coating
- Heat exchanger coil is glassed both externally and internally for optimum protection

MECHANICAL VENTING VERSATILITY
- Conventional power venting or direct venting
- Vents vertically or through a sidewall
- Front located exhaust and condensate connections allow for easy install and access
- Vents with low cost PVC Schedule 40 intake and exhaust pipe. Approved for optional CPVC Schedule 40, Polypropylene and AL29-4C stainless steel vent materials
- Direct-vent intake and exhaust pipe can terminate separately outside building or through single opening, using concentric vent assembly
- Canadian installations require ULC S636 PVC/CPVC, ULC S636 Polypropylene and AL29-4C stainless steel pipe for intake and exhaust

HIGH EFFICIENCY MODULATING PRE-MIX POWERED BURNER
- Down-fired pre-mix burner provides optimum efficiency and quiet operation
- Top-mounted burner position prevents condensation from affecting burner operation

Model Shown: 100 Gallon

ASME (OPTIONAL) ASME HLW

CERTIFIED UL WATER QUALITY ANSI/NSF-5

GAS-FIRED c UL us LISTED

AHRI CERTIFIED www.ahridirectory.org

Low Lead Content

ENERGY STAR

Revised June 2014

AOSCG10210

OTHER CYCLONE Mxi FEATURES

SPACE-SAVING DESIGN FOR INSTALLATION FLEXIBILITY

- Reduced footprint, ease of service, protection from water damage in case of flooding
- Easy-to-remove top cover for convenient access to serviceable parts
- 0″ installation clearances on sides and rear, 1-1/2″ installation clearance on top
- Handhole cleanout allows easy access to tank interior for cleaning
- 0″ clearance to combustibles, approved for installation on combustible floors

CODES AND STANDARDS

- CSA certified and ASME rated T&P relief valve
- Maximum hydrostatic working pressure: 160 PSI
- All models are design certified by Underwriters Laboratories (UL), Inc., to ANSI Z21.10.3 - CSA 4.3 Standards
- Meets the thermal efficiency and standby loss requirements of the U.S. Department of Energy and current edition ASHRAE/IESNA 90.1
- Design-certified by Underwriters Laboratories to NSF standard 5 for 180°F (62°C) water
- Complies with SCAQMD Rule 1146.2 and other Air Quality Management Districts with similar requirements for low-NOx emissions
- ASME tank construction optional on 120-500 model sizes

THREE-YEAR LIMITED TANK WARRANTY

- For complete warranty details, consult written warranty shipped with heater, or contact A. O. Smith (5-year tank extended warranty is optional)

OPTIONIAL KITS

- Optional Concentric Vent Kits
  BTH-120 -250 vent kit p/n 9006328005
  BTH-300 -500 vent kit p/n 9006144005

- Optional Low Profile Termination Vent Kits
  3″ Flush Mount Vent Kit p/n 9008933005
  4″ Flush Mount Vent Kit p/n 9008934005
  6″ Flush Mount Kit p/n 9008935005

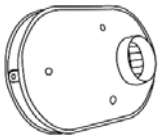

- Optional Condensate Neutralization Kits
  BTH-120-199 kit p/n 9007959005
  BTH-250-500 kit p/n 9007960005

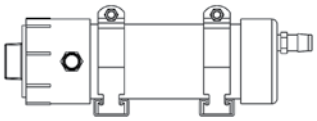

VENTING REQUIREMENTS

BTH-120(A) - 250(A)

NUMBER OF 90° ELBOWS INSTALLED	3 INCH PIPE	4 INCH PIPE
	MAXIMUM FEET (METERS)	MAXIMUM FEET (METERS)
One (1)	45 feet (13.7 meters)	115 feet (35.0 meters)
Two (2)	40 feet (12.2 meters)	110 feet (33.5 meters)
Three (3)	35 feet (10.7 meters)	105 feet (32.0 meters)
Four (4)	30 feet (9.1 meters)	100 feet (30.5 meters)
Five (5)	N/A	95 feet (29.0 meters)
Six (6)	N/A	90 feet (27.4 meters)

BTH-300(A) - 500(A)

NUMBER OF 90° ELBOWS INSTALLED	4 INCH PIPE	6 INCH PIPE
	MAXIMUM FEET (METERS)	MAXIMUM FEET (METERS)
One (1)	65 feet (19.8 meters)	115 feet (35.0 meters)
Two (2)	60 feet (18.2 meters)	110 feet (33.5 meters)
Three (3)	55 feet (16.8 meters)	105 feet (32.0 meters)
Four (4)	50 feet (15.2 meters)	100 feet (30.5 meters)
Five (5)	45 feet (13.7 meters)	95 feet (29.0 meters)
Six (6)	40 feet (12.2 meters)	90 feet (27.4 meters)

GAS PRESSURE REQUIREMENTS

MODEL	MANIFOLD PRESSURE		MINIMUM SUPPLY PRESSURE		MAXIMUM SUPPLY PRESSURE	
	NATURAL GAS	PROPANE GAS	NATURAL GAS	PROPANE GAS	NATURAL GAS	PROPANE GAS
BTH-120(A)	0″W.C. (0 kPa)	0″ W.C. (0 kPa)	4.4″ W.C. (1.10 kPa)	8.5″ W.C. (2.12 kPa)	14″ W.C. (3.49 kPa)	14″ W.C. (3.49 kPa)
BTH-150(A)	0″ W.C. (0 kPa)	0″ W.C. (0 kPa)	4.4″ W.C. (1.10 kPa)	8.5″ W.C. (2.12 kPa)	14″ W.C. (3.49 kPa)	14″ W.C. (3.49 kPa)
BTH-199(A)	0″ W.C. (0 kPa)	0″ W.C. (0 kPa)	4.4″ W.C. (1.10 kPa)	8.5″ W.C. (2.12 kPa)	14″ W.C. (3.49 kPa)	14″ W.C. (3.49 kPa)
BTH-250(A)	0″ W.C. (0 kPa)	0″ W.C. (0 kPa)	4.4″ W.C. (1.10 kPa)	8.5″ W.C. (2.12 kPa)	14″ W.C. (3.49 kPa)	14″ W.C. (3.49 kPa)
BTH-300(A)	0″ W.C. (0 kPa)	0″ W.C. (0 kPa)	4.8″ W.C. (1.19 kPa)	8.5″ W.C. (2.12 kPa)	14″ W.C. (3.49 kPa)	14″ W.C. (3.49 kPa)
BTH-400(A)	0″ W.C. (0 kPa)	0″ W.C. (0 kPa)	4.8″ W.C. (1.19 kPa)	8.5″ W.C. (2.12 kPa)	14″ W.C. (3.49 kPa)	14″ W.C. (3.49 kPa)
BTH-500(A)	0″ W.C. (0 kPa)	0″ W.C. (0 kPa)	4.8″ W.C. (1.19 kPa)	8.5″ W.C. (2.12 kPa)	14″ W.C. (3.49 kPa)	14″ W.C. (3.49 kPa)

For Technical Information and Automated Fax Service, call 800-527-1953. A. O. Smith Corporation reserves the right to make product changes or improvements without prior notice.

BTH-120(A) through BTH-250(A)

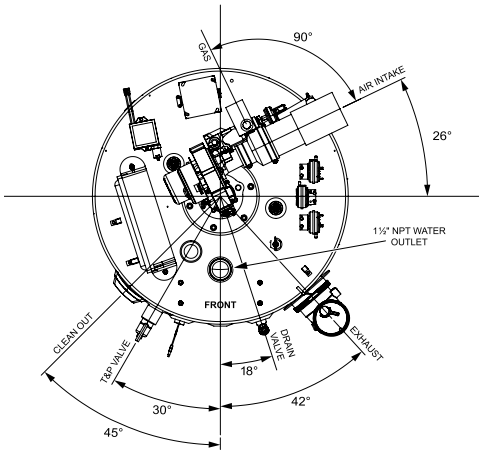

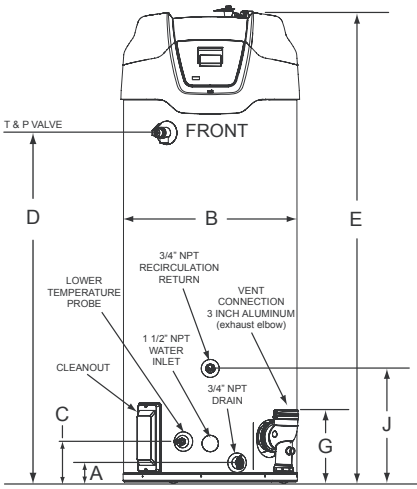

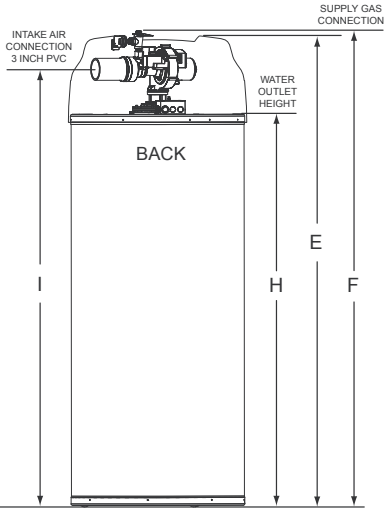

BTH-300(A) through BTH-500(A)

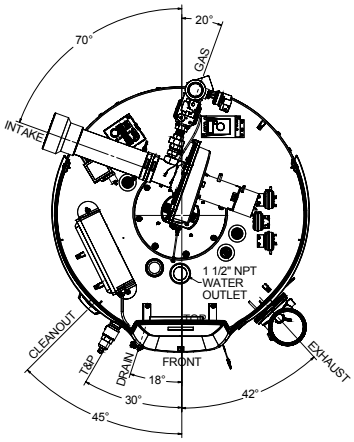

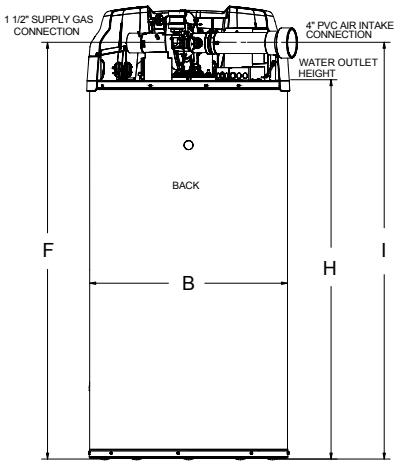

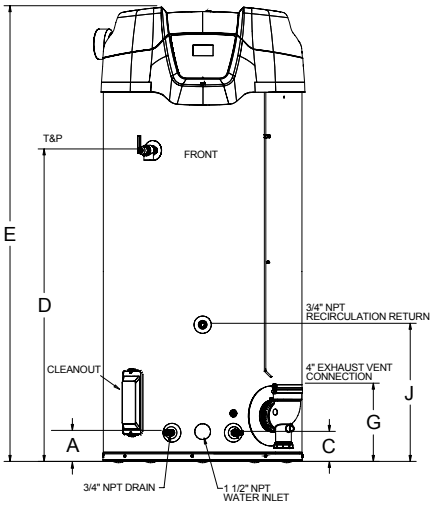

MODEL	APPROX. CAPACITY GALLON/LITER	DIMENSIONS										SHIPPING WEIGHT STD	SHIPPING WEIGHT ASME
		A	B	C	D	E	F	G	H	I	J		
		INCHES/CM	INCHES/CM	INCHES/CM	INCHES/CM	INCHES/CM	INCHES/CM	INCHES/CM	INCHES/CM	INCHES/CM	INCHES/CM	LBS/KG	LBS/KG
BTH-120(A)	60 / 227	3/7.62	27.75/70.5	6.3/16	35/88.9	55.5/141	53.5/135.9	11.25/28.6	42.25/107.32	48.5/123.2	18.25/46.36	460 / 208	490 / 220
BTH-150(A)	100 / 379	3/7.62	27.75/70.5	6.3/16	56.38/143.2	76/193.04	75.75/192.4	11.25/28.6	64/162.6	70/177.8	18.25/46.36	523 / 237	553 / 251
BTH-199(A)	100 / 379	3/7.62	27.75/70.5	6.3/16	56.38/143.2	76/193.04	75.75/192.4	11.25/28.6	64/162.6	70/177.8	18.25/46.36	523 / 237	553 / 251
BTH-250(A)	100 / 379	3/7.62	27.75/70.5	6.3/16	56.38/143.2	76/193.04	75.75/192.4	11.25/28.6	64/162.6	70/177.8	18.25/46.36	523 / 237	553 / 251
BTH-300(A)	119/450.96	4.75/12.07	33.12/84.12	4.75/12.07	52.00/132.08	75.75/192.41	73.75/187.3	12.75/32.39	63.13/160.35	69.25/175.9	23.00/58.43	855 / 387	855 / 387
BTH-400(A)	119/450.96	4.75/12.07	33.12/84.12	4.75/12.07	52.00/132.08	75.75/192.41	73.75/187.3	12.75/32.39	63.13/160.35	69.25/175.9	23.00/58.43	855 / 387	855 / 387
BTH-500(A)	119/450.96	4.75/12.07	33.12/84.12	4.75/12.07	52.00/132.08	75.75/192.41	73.75/187.3	12.75/32.39	63.13/160.35	69.25/175.9	23.00/58.43	855 / 387	855 / 387

Electrical characteristics-120V-60Hz A.C., 5.0 A
"A" in model represents ASME construction
Propane gas models available

For Technical Information and Automated Fax Service, call 800-527-1953. A. O. Smith Corporation reserves the right to make product changes or improvements without prior notice.

RECOVERY CAPACITY

MODEL	TYPE OF GAS	INPUT		THERMAL EFFICIENCY	U.S. GALLONS/HR AND LITRES/HR AT TEMPERATURE RISE INDICATED													
					APPROX. CAPACITY	°F	30° F	40° F	50° F	60° F	70° F	80° F	90° F	100° F	110° F	120° F	130° F	140° F
		BTU/HR	kW			°C	17° C	22° C	28° C	33° C	39° C	44° C	50° C	56° C	61° C	67° C	72° C	78° C
BTH-120(A)	NATURAL/ PROPANE	120,000	35	95%	60 U.S. Gals.	GPH	461	345	276	230	197	173	154	138	126	115	106	99
					227 Litres	LPH	1744	1308	1046	872	747	654	581	523	476	436	402	374
BTH-150(A)	NATURAL/ PROPANE	150,000	44	98%	100 U.S. Gals.	GPH	594	445	356	297	255	223	198	178	162	148	137	127
					379 Litres	LPH	2248	1686	1349	1124	964	843	749	674	613	562	519	482
BTH-199(A)	NATURAL/ PROPANE	199,900	58	97%	100 U.S. Gals.	GPH	783	588	470	392	336	294	261	235	214	196	181	168
					379 Litres	LPH	2965	2224	1779	1483	1271	1112	988	890	809	741	684	635
BTH-250(A)	NATURAL/ PROPANE	250,000	73	96%	100 U.S. Gals.	GPH	970	727	582	485	416	364	323	291	264	242	224	208
					379 Litres	LPH	3671	2753	2202	1835	1573	1377	1224	1101	1001	918	847	787
BTH-300(A)	NATURAL/ PROPANE	300,000	88	96%	119 U.S. Gals.	GPH	1164	873	698	582	499	436	388	349	317	291	269	249
					451 Litres	LPH	4405	3304	2643	2202	1888	1652	1468	1321	1201	1101	1017	944
BTH-400(A)	NATURAL/ PROPANE	399,900	117	95%	119 U.S. Gals.	GPH	1535	1151	921	767	658	576	512	460	419	384	354	329
					451 Litres	LPH	5810	4358	3486	2905	2490	2179	1937	1743	1585	1453	1341	1245
BTH-500(A)	NATURAL/ PROPANE	499,900	146	95%	119 U.S. Gals.	GPH	1919	1439	1151	959	822	720	640	576	523	480	443	411
					451 Litres	LPH	7263	5448	4358	3632	3113	2724	2421	2179	1981	1816	1676	1556

Recovery capacities are based on AHRI rated thermal efficiencies.

STORAGE CAPACITIES

MODEL	U.S. GALLONS	LITERS
BTH-120(A)	60	227
BTH-150(A)	100	379
BTH-199(A)	100	379
BTH-250(A)	100	379
BTH-300(A)	119	450.96
BTH-400(A)	119	450.96
BTH-500(A)	119	450.96

GAS LINE CONNECTION SIZE

MODEL	NATURAL GAS	PROPANE GAS
BTH-120(A)	3/4″ NPT	3/4″ NPT
BTH-150(A)	3/4″ NPT	3/4″ NPT
BTH-199(A)	3/4″ NPT	3/4″ NPT
BTH-250(A)	3/4″ NPT	3/4″ NPT
BTH-300(A)	1 1/2″ NPT	1 1/2″ NPT
BTH-400(A)	1 1/2″ NPT	1 1/2″ NPT
BTH-500(A)	1 1/2″ NPT	1 1/2″ NPT

SUGGESTED SPECIFICATION

(Natural or Propane) gas water heater(s) shall be A. O. Smith Cyclone Mxi model # _____ or equal, minimum 95% thermal efficiency, a storage capacity of _____ gallons, an input rating of _____ BTUs per hour, a recovery rating of _____ gallons per hour (gph) at 100°F rise and a maximum hydrostatic working pressure of 160 PSI. Water heater(s) shall: 1. Modulating gas burner that automatically adjusts the input based on demand. 2. Powered anodes that are non sacrificial and maintenance free. 3. Have seamless glass-lined steel tank construction, with glass lining applied to all water-side surfaces after the tank has been assembled and welded; 4. Meets the thermal efficiency and/or standby loss requirements of the U. S. Department of Energy and current edition of ASHRAE/IESNA 90.1; 5. Have foam insulation and a CSA Certified and ASME rated T&P relief valve; 6. Have a down-fired power burner designed for precise mixing of air and gas for optimum efficiency, requiring no special calibration on start-up; 7. Be approved for 0″ clearance to combustibles.

The control shall be an integrated solid-state temperature and ignition control device with integral diagnostics, graphic user interface, fault history display, and shall have digital temperature readout.

1. All models are design certified by Underwriters Laboratories (UL), Inc., according to ANSI Z21.10.3 - CSA 4.3 standards governing storage type water heaters; 2. Meet the thermal efficiency and standby loss requirements of the U. S. Department of Energy and current edition ASHRAE/IESNA 90.1. Complies with SCAQMD Rule 1146.2 and other air quality management districts with similar requirements for low NOx emissions.

120K-250K BTU Input:
For Standard Power Venting: Water heater(s) shall be suitable for power venting using a (3″ or 4″) _____ diameter PVC pipe for a total distance of (50 ft or 120 ft.) _____ equivalent feet of vent piping.

For Power Direct Venting: Water heater(s) shall be suitable for power direct venting using a (3″ or 4″) _____ diameter PVC pipe for a total distance of (50 ft or 120 ft.) _____ equivalent feet of vent piping and (50 ft. or 120 ft.)_____ equivalent feet of intake air piping.

300K - 500K BTU Input:
For Standard Power Venting: Water heater(s) shall be suitable for standard power venting using a (4″ or 6″)_____ diameter PVC pipe for a total distance of (70 ft. or 120 ft.)_____ equivalent feet of vent piping.

For Power Direct Venting: Water heater(s) shall be suitable for power direct venting using a (4″ or 6″) _____ diameter PVC pipe for a total distance of (70 ft or 120 ft.) _____ equivalent feet of vent piping and (50 ft. or 120 ft.)_____ equivalent feet of intake air piping.

Operation of the water heater(s) in a closed system where thermal expansion has not been compensated for (with a properly sized thermal expansion tank) will void the warranty.

Water heater should incorporate the iCOMM™ system for remote monitoring, leak detection and fault alert.

For Technical Information and Automated Fax Service, call 800-527-1953. A. O. Smith Corporation reserves the right to make product changes or improvements without prior notice.

©2014 A. O. Smith Corporation. All Rights Reserved

Thermostatic Mixing Valve — 2" Watts LFL111-3

D-701A – 19”x30” Elliptical Pipe Culvert

Taxiway B
P-701B – Elliptical Pipe Flared End Sections

Taxiway B
P-701C & P-701E – 18” & 24” RCP
Pipe Culvert

Taxiway B
P-701D – 18” RCP Pipe Flared End Sections

Taxiway B
D-701f 12” HDPE Pipe Culvert

Taxiway B
D-701g 12” HDPE Pipe End Section

Taxiway B
D-705A – 6” Pipe Underdrain

Taxiway B
D-705B – 6” Solid Drain Pipe

Taxiway B
D-751A - Inlet

Taxiway B
D-751B – Manhole

Taxiway G
P-701C – 18” RCP

Taxiway G
D-751A – Inlet

Taxiway G
D-705A & D-705B – 6” Perforated and Solid Pipe Underdrain

Taxiway G
D-705C – Infiltration Basin

#70 Steel Casing

#71 – 24” Pipe CWD

#72 – 24” MJ BFV

#73 – Hydrant Connection

Series MMV (½" – 1")

Thermostatic Mixing Valves

- For use in domestic water systems at the point of use to provide accurate outlet temperature control
- ASSE 1016-96 listed, ASSE 1017, ASSE 1069 listed and ASSE 1070 listed, CSA B-125 Certified

MMV-M1

Specifications

- Bronze body
- Maximum Temperature: 200ºF (93ºC)
- Maximum Working Pressure: 150psi (10.3 bar)
- Outlet Temperature: Ranges from 80ºF – 120ºF (27ºC – 49ºC) adjustable

End Connection Options

add Suffix:

UT – union thread connections
US – union solder connections
PEX – union PEX connections
CPVC – union CPVC connections
QC – union Quick-Connect connections

For additional information, request literature ES-MMV.

SIZE (DN)		MODEL	DIMENSIONS						WEIGHT	
			A		B		C			
in.	mm		in.	mm	in.	mm.	in.	mm	lbs.	kgs.
½	15	MMV-UT-M1	4⅞	124	5⁷⁄₁₆	137	3³⁄₁₆	80	1.5	.68
¾	20		4⅞	124	5⁷⁄₁₆	137	3³⁄₁₆	80	1.6	.73
1	25		5⁵⁄₁₆	135	5⅝	143	3⅜	86	1.6	.73
½	15	MMV-US-M1	4¹³⁄₁₆	123	5⅜	137	3⅛	80	1.5	.68
¾	20		5⁵⁄₁₆	135	5⅝	143	3⅜	86	1.6	.73
1	25		5¹³⁄₁₆	148	5⅞	149	3⅝	92	1.6	.73
½	15	MMV-PEX-M1	5¼	133	5⁹⁄₁₆	142	3⁵⁄₁₆	85	1.5	.68
¾	20		5½	140	5¹¹⁄₁₆	145	3⁷⁄₁₆	88	1.6	.73
1	25		5⅞	149	5⅞	150	3⅝	93	1.6	.73
½	15	MMV-CPVC-M1	4¾	121	5⁵⁄₁₆	136	3¹⁄₁₆	79	1.5	.68
¾	20		5¼	133	5⁹⁄₁₆	142	3⁵⁄₁₆	85	1.6	.73
1	25		5¹¹⁄₁₆	144	5¹³⁄₁₆	147	3⁹⁄₁₆	90	1.6	.73
½	15	MMV-QC-M1	6⅝	168	6¼	159	4	102	2.17	.98
¾	20		6¹⁵⁄₁₆	177	6⁷⁄₁₆	163	4³⁄₁₆	106	2.88	1.31
1	25		7⅛	181	6½	165	4¼	108	3.65	1.66

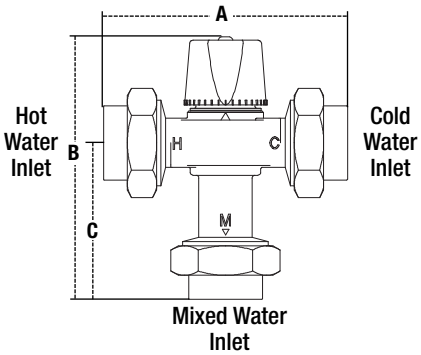

Model L111 (½")

Thermostatic Mixing Valve

- Maintains desired mixed water temperature at point of use for single showers or lavatories
- ASSE 1016-96 listed, ASSE 1069 listed and ASSE 1070 listed
- Brass body construction with polyetherimide control cartridge and polypropylene tamper-resistant cover to ensure long life

L111
(shown with CS-U Check Stops Installed)

Specifications

- ½" (15mm) threaded female inlet and outlet
- Minimum Working Pressure: 15psi (103 kPa)
- Maximum Working Pressure: 125psi (8.6 bar)
- Temperatures for inlets: hot, 120°F to 180°F (49°C – 82°C); cold, 33°F to 85°F (0.5°C – 29°C)
- Minimum Differential Temperature: 10°F (-12°C)
- Outlet Temperature: ranges from 80°F to 120°F (27°C – 49°C); adjustable by contractor; accurate within ±3°F (±1.7°C)

For additional information, request literature ES-L111.

Options

add Suffix:

CS-U – integral check, strainer, and stop valves. Sizes: ½", ¾", 1" (15 – 25mm)

MODEL	SIZE (DN)		DIMENSIONS (APPROX.)						WEIGHT	
			A		B		D			
	in.	mm	in.	mm	in.	mm	in.	mm	lbs.	kgs.
L111	½	15	3	76	4	102	11⁄16	175	3.5	1.5

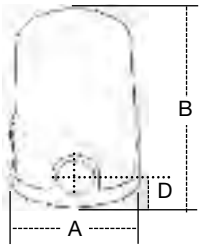

Expansion Tank — 40 Gal Pre-Charged
Watts PLT-40
D-701A – 19”x30” Elliptical Pipe Culvert

Taxiway B
P-701B – Elliptical Pipe Flared End Sections

Taxiway B
P-701C & P-701E – 18” & 24” RCP
Pipe Culvert

Taxiway B
P-701D – 18” RCP Pipe Flared End Sections

Taxiway B
D-701f 12” HDPE Pipe Culvert

Taxiway B
D-701g 12” HDPE Pipe End Section

Taxiway B
D-705A – 6” Pipe Underdrain

Taxiway B
D-705B – 6” Solid Drain Pipe

Taxiway B
D-751A - Inlet

Taxiway B
D-751B – Manhole

Taxiway G
P-701C – 18” RCP

Taxiway G
D-751A – Inlet

Taxiway G
D-705A & D-705B – 6” Perforated and Solid Pipe Underdrain

Taxiway G
D-705C – Infiltration Basin

#70 Steel Casing

#71 – 24” Pipe CWD

#72 – 24” MJ BFV

#73 – Hydrant Connection

Engineering Specification

Job Name _____

Job Location _____

Engineer _____

Approval _____

Contractor _____

Approval _____

Contractor's P.O. No. _____

Representative _____

LEAD FREE*

Series PLT

Potable Water Expansion Tanks

Series PLT Potable Water Expansion Tanks are designed to absorb the increased volume of water created by thermal expansion and to maintain balanced pressure throughout the potable water supply system.

Heated water expands, and in a domestic hot water system, the system may be closed when the potable water system is isolated from the public water supply by a one-way valve such as pressure reducing valve, backflow preventer or check valve. Provisions must be made for this expansion.

Series PLT expansion tanks absorb the increased volume of water created when the hot water storage tank is heated and keeps the system pressure below the relief setting of the T&P relief valve.

It is a pre-pressurized steel tank with an expansion membrane that prevents contact of the water with the air in the tank. This prevents loss of air to the water and insures long and trouble-free life for the system. These tanks may be used with all types of Direct Fired Hot Water Heaters (gas, oil or electric) and hot water storage tanks.

Features

- Rugged flexible butyl diaphragm
- Field adjustable pre-charge
- In-line and free standing models
- Can be used with most standard hot water heaters and storage tanks

Models

PLT-5-M1	¾" male connection, tank volume 2.1 gal.
PLT-12-M1	¾" male connection, tank volume 4.5 gal.
PLT-20-M1	¾" male connection, tank volume 8.5 gal.
PLT-35-M1	1" female connection, tank volume 14.00 gal.

Specifications

The potable water expansion tank shall be of drawn steel construction. It shall have a Butyl diaphragm separating the air chamber from the water containing chamber. Inlet connector shall be Stainless Steel. Materials of manufacture for the diaphragm shall be FDA approved.

The potable water expansion tank shall be a Watts Model PLT.

Standards

Models PLT-5, PLT-12 and PLT-20
are Listed by IAPMO.
Certified to ANSI/NSF 61
Model PLT-35
Certified to ANSI/NSF 61

(73°F/23°C)

Note: The potable water expansion tank shall be installed in the cold water service pipe line on the supply side of the water heater (or water storage tank). A pressure relief valve sized and installed in accordance with local codes must be incorporated in the system.
In those systems requiring a combined temperature and pressure safety relief valve, the temperature and pressure relief valve should be sized and installed in accordance with local codes. Adequate drainage provisions should be provided where water flow will cause damage.

See chart on back

NOTICE

The information contained herein is not intended to replace the full product installation and safety information available or the experience of a trained product installer. You are required to thoroughly read all installation instructions and product safety information before beginning the installation of this product.

NOTICE

Inquire with governing authorities for local installation requirements

***The wetted surface of this product contacted by consumable water contains less than 0.25% of lead by weight.**

Watts product specifications in U.S. customary units and metric are approximate and are provided for reference only. For precise measurements, please contact Watts Technical Service. Watts reserves the right to change or modify product design, construction, specifications, or materials without prior notice and without incurring any obligation to make such changes and modifications on Watts products previously or subsequently sold.

Selection

This Quick Reference Selection Guide may be used as an alternative to using a formula to determine the correct expansion tank for the system. This table is based upon a relief valve setting of 150psi (10.3 bar), and a maximum of 50°F temperature rise.

To select the correct model PLT series tank, simply go the supply pressure equal to the system supply pressure (for pressures between those shown use next highest supply pressure shown), read across the chart to the correct tank as indicated by the water heater capacity (for capacities between those shown, use next highest capacity).

To accommodate the thermal expansion required for higher temperature and/or higher pressure systems, multiple tanks may be used. Please contact the factory for sizing information.

Materials

Diaphragm: Butyl rubber

Inlet Connection: Stainless Steel

Technical Information

DESCRIPTION	PLT-5	PLT-12	PLT-20	PLT-35
Max. Pressure - PSI	150	150	150	150
Max. Temp. - °F	200	200	200	200
Tank Volume - Gal.	2.1	4.5	8.5	14.00
Air Pre-charge - PSI	20	20	20	20
Connections Size - Inches	¾ Male	¾ Male	¾ Male	1 Female
Diameter - Inches	8	10.5	12.5	16.0
Length - Inches	11	13.5	19.2	21.7
Weight - Lbs.	5.5	10	15	32

Acceptance Volume

AIR SIDE PRE-PRESSURE (PSI)	WATER SIDE VOLUME AT 150PSI (GALLONS)			
	PLT-5	PLT-12	PLT-20	PLT-35
20	1.48	3.42	7.102	10.69
40	1.26	2.88	5.882	9.17
60	1.0	2.49	4.705	7.59
80	.8	1.85	4.009	6.07

SUPPLY PRESSURE (PSIG)	WATER HEATER (GALLONS)						
	20	30	40	50	80	100	120
40							
50							
55							
60							
70							
80							
90							
100							
110							
120							

PLT-5 PLT-20
PLT-12 PLT-35
Multiple tanks required - consult factory

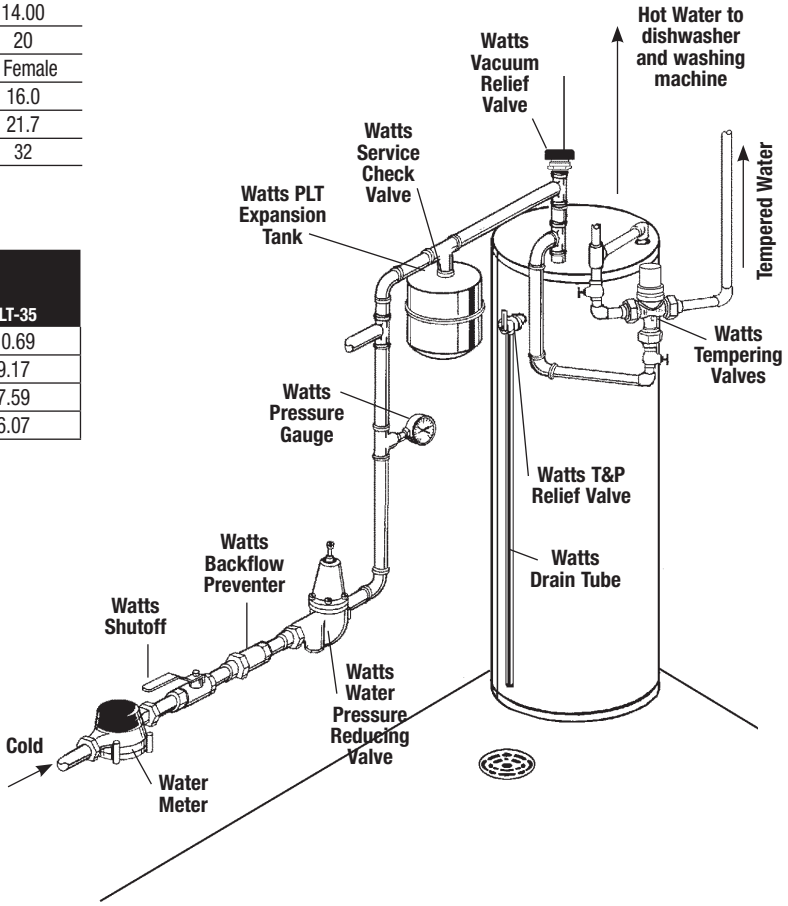

USA: T: (978) 689-6066 • F: (978) 975-8350 • Watts.com
Canada: T: (888) 208-8927 • F: (905) 332-7068 • Watts.ca
Latin America: T: (52) 55-4122-0138 • Watts.com

© 2020 Watts

T&P Relief Valve — 3/4" x 1" 150 PSI / 210°F
Watts LF100XL
D-701A – 19”x30” Elliptical Pipe Culvert

Taxiway B
P-701B – Elliptical Pipe Flared End Sections

Taxiway B
P-701C & P-701E – 18” & 24” RCP
Pipe Culvert

Taxiway B
P-701D – 18” RCP Pipe Flared End Sections

Taxiway B
D-701f 12” HDPE Pipe Culvert

Taxiway B
D-701g 12” HDPE Pipe End Section

Taxiway B
D-705A – 6” Pipe Underdrain

Taxiway B
D-705B – 6” Solid Drain Pipe

Taxiway B
D-751A - Inlet

Taxiway B
D-751B – Manhole

Taxiway G
P-701C – 18” RCP

Taxiway G
D-751A – Inlet

Taxiway G
D-705A & D-705B – 6” Perforated and Solid Pipe Underdrain

Taxiway G
D-705C – Infiltration Basin

#70 Steel Casing

#71 – 24” Pipe CWD

#72 – 24” MJ BFV

#73 – Hydrant Connection

Engineering Specification

Job Name _____ Contractor _____

Job Location _____ Approval _____

Engineer _____ Contractor's P.O. No. _____

Approval _____ Representative _____

LEAD FREE*

Series LF1L, LF1XL, LF10L and LF100XL

Temperature and Pressure Relief Valves

ASME Rated**, CSA Listed. Self-closing T&P Relief Valves for Water Heaters up to 105,000 BTU/Hr.

The combined 2 in 1 T&P relief valve provides the least expensive and proven means for protection against both excessive temperature and pressure emergency conditions.

Provides fully automatic temperature and pressure relief protection for hot water storage tanks and heaters up to 105,000 BTU/HR. Series LF10L furnished with test lever and short thermostat for installation directly in tank tapping. Series LF100XL furnished with test lever and extension thermostat for installation in the hot water outlet line or directly in the tank tapping. Temperature sensing element must be immersed in the water within the top 6" (152mm) of the tank. Male inlet and female outlet. Temperature relief 210°F (99°C). Standard settings 75, 100, 125, 150psi (5.3, 7.0, 8.8, 10.3 bar). The LF1L, LF1XL, LF10L, and LF100XL feature Lead Free* construction to comply with Lead Free* installation requirements.

Features

- Series LF1L, LF1XL Size ½" LF10L, LF100XL Size ¾"
- A.S.M.E. Rated**, CSA Listed
- Features a unique thermostat with special thermo-bonded coating
- LF1L and LF1XL Lead Free* copper silicon alloy body
- LF10L and LF100XL Lead Free* copper alloy body
- Stainless steel spring
- Thermostat is accurate and proven. Exclusively designed and manufactured by Watts

Options

- For tanks and heaters with extra thick insulation, send for literature ES-LFSL100XL/LFL100XL/LFLL100XL/LFLLL100XL
- Series 100XL-8 with 8" (200mm) extension thermostat
- Series LF1L, LF1XL Size ½": For both temperature and pressure relief protection. Series LF1L has short thermostat and test lever. Series LF1XL has extension thermostat with thermo-bonded coating. Also available with 8" (200mm) extension thermostat
- SOLAR - Model Z11 for stainless steel lever & 180°F (82°C) thermostat

NOTICE

The information contained herein is not intended to replace the full product installation and safety information available or the experience of a trained product installer. You are required to thoroughly read all installation instructions and product safety information before beginning the installation of this product.

LF10L

LF100XL

Specification

T&P valves

Each water heater and hot water storage tank shall be equipped with a CSA and A.S.M.E. Rated** automatic temperature and pressure relief valve to protect the heater from excessive pressure and temperature. Lead Free* Temperature and Pressure Relief Valves (valve type, reduced pressure zone, etc.) shall be constructed using Lead Free* materials. Lead Free valves shall comply with state codes and standards, where applicable, requiring reduced lead content. The device shall be ANSI Z21.22 certified. The BTU discharge capacity of the device shall be in excess of the BTU input rating of the heater. Watts Series No. LF1L, LF1XL, LF10L or LF100XL.

⚠ WARNING

Following installation, the valve lever MUST be operated AT LEAST ONCE A YEAR to ensure that the water-ways are clear. Certain naturally occurring mineral deposits may adhere to the valve, rendering it inoperative. When manually operating the lever, water will discharge and precautions must be taken to avoid contact with hot water and to avoid water damage. BEFORE **operating lever**, check to see that a discharge line is connected to this valve directing the flow of hot water from the valve to a proper place of disposal otherwise personal injury may result. If no water flows, valve is inoperative. **TURN OFF THE WATER HEATER AND CALL A PLUMBER IMMEDIATELY.**

NOTICE

This device is designed for emergency safety relief and shall not be used as an operating control.

NOTICE

Inquire with governing authorities for local installation requirements

Maximum system operating pressure must not exceed 75% of valve set pressure.

*The wetted surface of this product contacted by consumable water contains less than 0.25% of lead by weight.

**Series LF1L and LF1XL Valves are not A.S.M.E. Listed or Rated.

Watts product specifications in U.S. customary units and metric are approximate and are provided for reference only. For precise measurements, please contact Watts Technical Service. Watts reserves the right to change or modify product design, construction, specifications, or materials without prior notice and without incurring any obligation to make such changes and modifications on Watts products previously or subsequently sold.

WATTS®

Series LF1L, LF1XL, LF10L and LF100XL

Direct Side Tapping

For External Flue Heaters

Use extra length extension thermostat to extend into water storage tank.

For Internal Flue Heaters

Use short or standard length thermostat. Vertical discharge line must be installed with its direction downward.

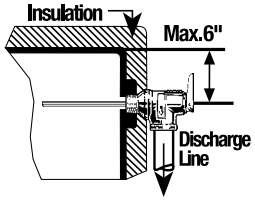

Alternate

Only when the tappings are not provided

Use standard or extra length extension thermostat.

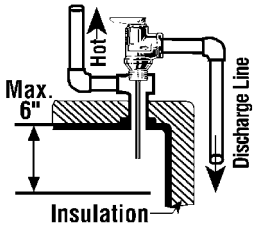

Direct Top Tapping

For Heaters

Use standard or extra length extension thermostat.

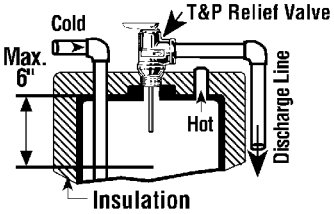

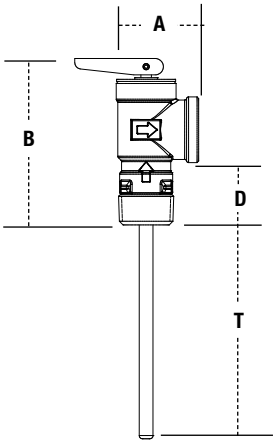

Dimensions – Weights

MODEL	SIZE	DIMENSIONS										CSA
		A		B		D				Weight		Temp. Steam
	in.	in.	mm	in.	mm	in.	mm	in.	mm	oz.	gm	Rating BTU/hr.
LF1L2 M7	1/2	1 3/4	43	3 1/2	89	7/8	22	2	50	10	284	15,000
LF1XL-4 M7	1/2	1 3/4	43	3 1/2	89	7/8	22	4	100	12	340	15,000
LF1XL-8 M7	1/2	1 3/4	43	3 1/2	89	7/8	22	8	203	16	454	15,000
LF10L-2 M7	3/4	1 5/32	40	3 11/64	81	1 3/16	30	2	50	8	227	80,000
LF100XL-4 M7	3/4	1 5/32	40	3 11/64	81	1 3/16	30	4	100	8	227	105,000
LF100XL-8 M7	3/4	1 5/32	40	3 11/64	81	1 3/16	30	8	203	8	227	105,000

A = overall width of the valve. B = overall height of the valve, with lever closed, not including thermostat element length. D = length of shank , from shoulder under outlet orifice overhang to inlet orifice edge.

T = length of thermostat element, measured from inlet orifice edge to end of thermostat.* 150psi set pressure

⚠ WARNING

REINSPECTION OF T&P RELIEF VALVE: Temperature and Pressure Relief Valves should be reinspected AT LEAST ONCE EVERY TWO TO FOUR YEARS by a licensed plumbing contractor or authorized inspection agency, to insure that the product has not been affected by corrosive water conditions and to insure that the valve and discharge line have not been altered or tampered with illegally. Certain naturally occurring conditions may corrode the valve or its components over time, rendering the valve inoperative. Such conditions are not detectable unless the valve and its components are physically removed and inspected. Do not attempt to conduct this inspection on your own. Contact your plumbing contractor for a reinspection to assure continuing safety. **FAILURE TO REINSPECT THIS VALVE AS DIRECTED COULD RESULT IN UNSAFE TEMPERATURE OR PRESSURE BUILD-UP WHICH CAN RESULT IN SERIOUS INJURY OR DEATH AND/OR SEVERE PROPERTY DAMAGE.**

NOTICE

A relief valve functions in an emergency by discharging water. Therefore, it is essential that a discharge line be piped from the valve in order to carry the overflow to a safe place of disposal. The discharge line must be the same size as the valve outlet and must pitch downward from the valve and terminate at least 6"(152mm) above the floor drain where any discharge will be clearly visible. For 100DT discharge line consult your Watts agent.

USA: T: (978) 689-6066 • Watts.com
Canada: T: (888) 208-8927 • Watts.ca
Latin America: T: (52) 55-4122-0138 • Watts.com

© 2026 Watts