GRAND JUNCTION Winwater COMPANY

Customer Name

Job Name Line 1

Job Name Line 2

Materials Submittal Index

Materials List

Bid Item	Manufacturer	# of Pages
	Manufacturer	# of Pages
	Manufacturer	# of Pages
	Manufacturer	# of Pages
	Manufacturer	# of Pages
	Manufacturer	# of Pages
	Manufacturer	# of Pages
	Manufacturer	# of Pages

GRAND JUNCTION Winwater COMPANY

Customer Name

Job Name Line 1

Job Name Line 2

Materials Submittal Index

Materials List

	Manufacturer	# of Pages
	Manufacturer	# of Pages
	Manufacturer	# of Pages
	Manufacturer	# of Pages
	Manufacturer	# of Pages
	Manufacturer	# of Pages
	Manufacturer	# of Pages
	Manufacturer	# of Pages

Customer Name

Job Name Line 1

Job Name Line 2

Materials Submittal Index

Materials List

Floor Drain — 12" Round Cast Iron	Zurn	1
Hose Bibb — 3/4" Freeze-Resistant	Zurn	1

Floor Drain — 12" Round Cast Iron
Zurn ZN415-12
D-701A – 19”x30” Elliptical Pipe Culvert

Taxiway B
P-701B – Elliptical Pipe Flared End Sections

Taxiway B
P-701C & P-701E – 18” & 24” RCP
Pipe Culvert

Taxiway B
P-701D – 18” RCP Pipe Flared End Sections

Taxiway B
D-701f 12” HDPE Pipe Culvert

Taxiway B
D-701g 12” HDPE Pipe End Section

Taxiway B
D-705A – 6” Pipe Underdrain

Taxiway B
D-705B – 6” Solid Drain Pipe

Taxiway B
D-751A - Inlet

Taxiway B
D-751B – Manhole

Taxiway G
P-701C – 18” RCP

Taxiway G
D-751A – Inlet

Taxiway G
D-705A & D-705B – 6” Perforated and Solid Pipe Underdrain

Taxiway G
D-705C – Infiltration Basin

#70 Steel Casing

#71 – 24” Pipe CWD

#72 – 24” MJ BFV

#73 – Hydrant Connection

Z415N
BODY ASSEMBLY W/ “TYPE N” STRAINER

SPECIFICATION SHEET

TAG _____

Design and Dimensional Data (inches and [mm]) are Subject to Manufacturing Tolerances and Change Without Notice

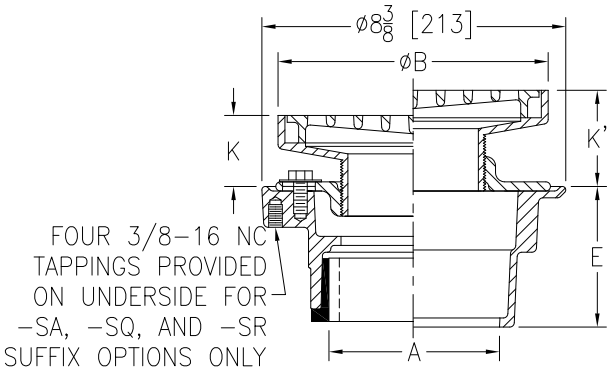

Dimension in Inches [mm]						Approx. Wt. Lbs. [kg]	Strainer Open Area Sq. In. [cm2]
A - Pipe Size	B Strainer Dia.	K		K’			
		Min.	Max.	Min.	Max.		
2,3,4 [51,76,102]	7 [178]	1-9/16 [40]	2-3/8 [60]	1-7/8 [48]	3-1/8 [79]	17 [8]	12 [77]
2,3,4 [51,76,102]	9 [229]	1-11/16 [43]	2-5/8 [67]	2 3/16 [56]	3-3/8 [86]	21 [10]	23 [148]
6 [152]	9 [229]	1-11/16 [43]	2-5/8 [67]	2 3/16 [56]	3-3/8 [86]	23 [10]	23 [148]

ENGINEERING SPECIFICATION: ZURN ZN415N
Floor and shower drain, Dura-Coated cast iron body with bottom outlet, combination invertible membrane clamp and adjustable collar with seepage slots and “TYPE N” D.C.C.I. light-duty strainer with deep flanged grate.

OPTIONS (Check/specify appropriate options)

PIPE SIZE	(Specify size/type) **OUTLET**		**‘E’ BODY HT. DIM.**
2 [51]	____ IP	Threaded	2-7/16 [62]
3 [76]	____ IP	Threaded	2-3/4 [70]
4 [102]	____ IP	Threaded	2-13/16 [71]
6 [152]	____ IP	Threaded	2-7/8 [73]
2,3,4 [51,76,102]	____ NH	No-Hub	3-13/16 [97]
2,3,4 [51,76,102]	____ NL	Neo-Loc	3-7/8 [98]

PREFIXES
____ Z D.C.C.I. Body Assembly w/ Dura-Coated Top*
____ ZB D.C.C.I. Body Assembly w/ Polished Bronze Top
____ ZN D.C.C.I. Body Assembly w/ Polished Nickel Bronze Top

SUFFIXES
____ -AR Acid Resisting Epoxy Coated Cast Iron
____ -DG Duresist Grate
____ -G Galvanized Cast Iron
____ -P Trap Primer Connection (Specify 1/2 [13] or 3/4 [19])
____ -SA Stabilizer Assembly (See Z1035)
____ -SQ Stabilizer Q-Deck (See Z1035-Q)
____ -SR Stabilizer Ring
____ -TC Neo-loc Test Cap Gasket (2,3,4 [51,76,102] NL Bottom Outlet Only)
____ -TS Top Secured with Slotted Screws
____ -U 1-3 [25-76] High Extension Adapter
____ -V Backwater Valve
____ -VP Vandal-Proof Secured Top
____ -Y Sediment Bucket
____ -90 90° Threaded Side Outlet Body Assembly (2,3 [51,76] Only)

* Regularly furnished unless otherwise specified.

⚠ **WARNING:** Cancer and Reproductive Harm - www.P65Warnings.ca.gov
⚠ **ADVERTENCIA:** Cáncer y daño reproductivo - www.P65Warnings.ca.gov
⚠ **AVERTISSEMENT:** Cancer et effets néfastes sur la reproduction - www.P65Warnings.ca.gov

Zurn Industries, LLC | Specification Drainage Operation
1801 Pittsburgh Avenue, Erie, PA USA 16502, Ph. 855.663.9876

In Canada | Zurn Industries Limited
7900 Goreway Drive, Unit 10, Brampton, Ontario L6T 5W6, Ph. 877.892.5216

www.zurn.com

Rev. L
Date: 12/29/22
C.N. No. 144898
Patent zurn.com/patents
Prod. | Dwg. No. Z415N

Hose Bibb — 3/4" Freeze-Resistant
Zurn Z1365-3/4
D-701A – 19”x30” Elliptical Pipe Culvert

Taxiway B
P-701B – Elliptical Pipe Flared End Sections

Taxiway B
P-701C & P-701E – 18” & 24” RCP
Pipe Culvert

Taxiway B
P-701D – 18” RCP Pipe Flared End Sections

Taxiway B
D-701f 12” HDPE Pipe Culvert

Taxiway B
D-701g 12” HDPE Pipe End Section

Taxiway B
D-705A – 6” Pipe Underdrain

Taxiway B
D-705B – 6” Solid Drain Pipe

Taxiway B
D-751A - Inlet

Taxiway B
D-751B – Manhole

Taxiway G
P-701C – 18” RCP

Taxiway G
D-751A – Inlet

Taxiway G
D-705A & D-705B – 6” Perforated and Solid Pipe Underdrain

Taxiway G
D-705C – Infiltration Basin

#70 Steel Casing

#71 – 24” Pipe CWD

#72 – 24” MJ BFV

#73 – Hydrant Connection

Z1365

GROUND HYDRANT
Encased, Flush Type, Non-Freeze

SPECIFICATION SHEET

TAG _____

Dimensional Data (inches and [mm]) are Subject to Manufacturing Tolerances and Change Without Notice

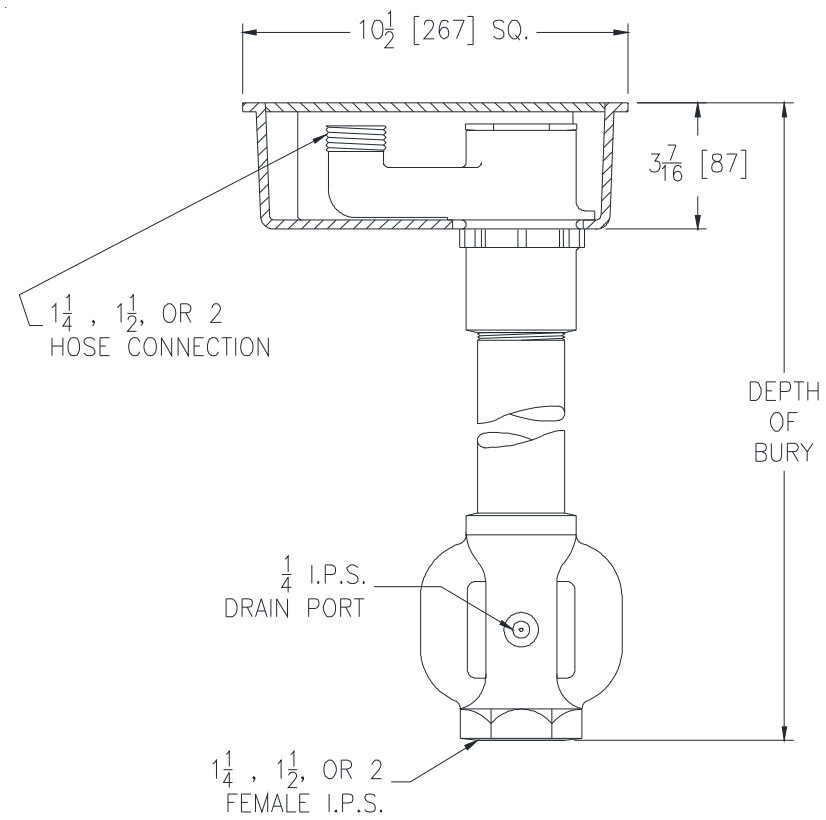

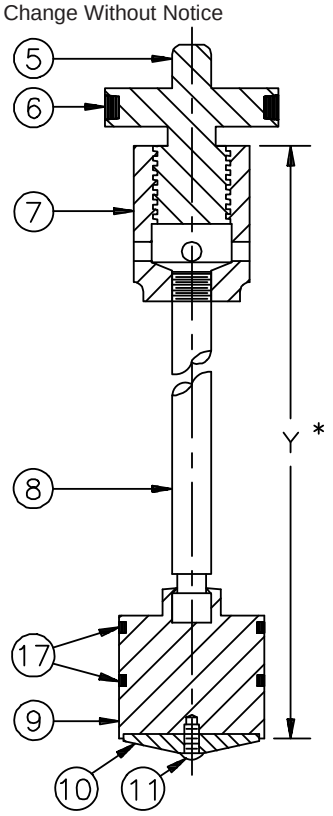

INTERNAL PARTS

Depth of Bury Feet [mm]	Approx. Wt. Lbs.[kg]
2 [610]	42 [19]
3 [914]	46 [21]
4 [1219]	50 [23]
5 [1524]	54 [25]
6 [1829]	58 [26]

ENGINEERING SPECIFICATION: ZURN Z1365
Encased, non-freeze ground hydrant for flush with grade or finished floor installation. Complete with galvanized steel casing, all bronze interior parts, bronze seat and replaceable seat washer, and non-turning operating rod with free-floating compression closure valve with 1-1/4",1-1/2" or 2" connection. Dura-Coated cast iron box and hinged scoriated cover with operating "T" handle key lock and "WATER" cast on cover. Hydrant is equipped with a tapped 1/4" drain port in valve housing.
Note:
1. IMPORTANT Hydrant must be opened one turn minimum to seal drain port during use.

CONNECTION TYPE:

____ 1-1/4 Hose Connection
____ 1-1/2 Hose Connection
____ 2 Hose Connection

OPTIONS (Check/specify appropriate options)

SUFFIXES

____ -DP14 1/4 [6] IP Drain Port in Box
____ -NB Polished Nickel Bronze Face
____ -PB Polished Bronze Face
____ -RK Hydrant Parts Repair Kit

PARTS LIST

Item	Name	Quan.
5	Operating Screw	1
6	O-Ring	1
7	Operating Coupling	1
8	Operating Rod	1
9	Washer Guide	1
10	Washer (neoprene)	1
11	Screw	1
17	O-Ring	2

* Regularly furnished unless otherwise specified.

Zurn Industries, LLC | Specification Drainage Operation
1801 Pittsburgh Avenue, Erie, PA U.S.A. 16502 · Ph. 855-663-9876, Fax 814-454-7929
In Canada | **Zurn Industries Limited**
3544 Nashua Drive, Mississauga, Ontario L4V 1L2 · Ph. 905-405-8272, Fax 905-405-1292
www.zurn.com

Rev. H
Date: 09/28/2017
C.N. No. 138014
Prod. | Dwg. No. Z1365