GRAND JUNCTION Winwater COMPANY

Customer Name

Job Name Line 1

Job Name Line 2

Materials Submittal Index

Materials List

Bid Item	Manufacturer	# of Pages
	Manufacturer	# of Pages
	Manufacturer	# of Pages
	Manufacturer	# of Pages
	Manufacturer	# of Pages
	Manufacturer	# of Pages
	Manufacturer	# of Pages
	Manufacturer	# of Pages

GRAND JUNCTION Winwater COMPANY

Customer Name

Job Name Line 1

Job Name Line 2

Materials Submittal Index

Materials List

	Manufacturer	# of Pages
	Manufacturer	# of Pages
	Manufacturer	# of Pages
	Manufacturer	# of Pages
	Manufacturer	# of Pages
	Manufacturer	# of Pages
	Manufacturer	# of Pages
	Manufacturer	# of Pages

Customer Name

Job Name Line 1
Job Name Line 2

Materials Submittal Index

Materials List

Emergency Tempered Water Mixing Valve	Watts	2
Pipe Insulation — Fiberglass with ASJ Jacket	Johns Manville	3

Emergency Tempered Water Mixing Valve
Watts LF1170M2-US
D-701A – 19”x30” Elliptical Pipe Culvert

Taxiway B
P-701B – Elliptical Pipe Flared End Sections

Taxiway B
P-701C & P-701E – 18” & 24” RCP
Pipe Culvert

Taxiway B
P-701D – 18” RCP Pipe Flared End Sections

Taxiway B
D-701f 12” HDPE Pipe Culvert

Taxiway B
D-701g 12” HDPE Pipe End Section

Taxiway B
D-705A – 6” Pipe Underdrain

Taxiway B
D-705B – 6” Solid Drain Pipe

Taxiway B
D-751A - Inlet

Taxiway B
D-751B – Manhole

Taxiway G
P-701C – 18” RCP

Taxiway G
D-751A – Inlet

Taxiway G
D-705A & D-705B – 6” Perforated and Solid Pipe Underdrain

Taxiway G
D-705C – Infiltration Basin

#70 Steel Casing

#71 – 24” Pipe CWD

#72 – 24” MJ BFV

#73 – Hydrant Connection

Product Engineering Specification

Job Name _____ Contractor _____

Job Location _____ Approval _____

Engineer _____ Contractor's P.O. No. _____

Approval _____ Representative _____

LEAD FREE*

Series LF1170 and LFL1170

Hot Water Temperature Control Valves

Sizes: ½" – 1"

LF1170M2-US

LF1170M2-CEF

ASSE 1017 · UPC · NSF Certified to NSF/ANSI/CAN 61 & NSF/ANSI/CAN 372

Series LF1170, LFL1170 Hot Water Temperature Control Valves are specifically designed for mixing hot and cold water on hot water supply systems. They can be used for a variety of applications to reduce the temperature of the hot water from the system and are ideal for radiant heat applications. This series features a "double throttling" design which combines the control of the hot and cold water to provide a sensitive response to changes in water temperature passing through the mixing chamber.

The LF1170M2 can be set to any temperature between 90°F and 160°F (60°F and 120°F for model LFL1170M2) with flow rates as low as 0.5 gpm and as high as 23 gpm (refer to capacity chart on the back). The superior flow characteristics of this valve provide accurate temperature control to the requirements of ASSE 1017** across the rated flow range. The LF1170M2 and LFL1170M2 feature Lead Free* construction to comply with Lead Free* installation requirements.

These valves also provide additional safety as they restrict mixed water out to a drip upon loss of cold water supply to the valve.

As an added feature, the LF1170M2 and LFL1170M2 incorporate integral check valves and filter washers in both the hot and cold water inlets to protect against cross flow.

Features

- Lead Free* cast copper silicon alloy body construction
- Solid wax hydraulic principle thermostat assures dependable mixing of hot and cold water
- Thermostat controls both hot and cold water
- Available union connection models include threaded (-UT), solder (-US), PEX (-PEX), PEX F1960 cold expansion fittings (-CEF)*****, CPVC (-CPVC), Quick-Connect (-QC), or w/press****
- Integral filter washers and check valves
- Adjustment cap with locking feature

Minimum flow requirements to maintain set temperature for Series LF1170M2

VALVE SIZE	GPM
½" – 1"	.5

NOTICE

The information contained herein is not intended to replace the full product installation and safety information available or the experience of a trained product installer. You are required to thoroughly read all installation instructions and product safety information before beginning the installation of this product.

*The wetted surface of this product contacted by consumable water contains less than 0.25% of lead by weight.

**ASSE 1017 listing is for valves used in hot water source applications.

****Available with LF1170 series only

*****Available with LF1170 series, sizes 1/2" and 3/4"

⚠ WARNING

FAILURE TO COMPLY WITH PROPER INSTALLATION AND MAINTENANCE INSTRUCTIONS COULD CONTRIBUTE TO THE VALVE FAILURE.

This Hot Water Master Tempering Valves cannot be used for tempering water temperature at fixtures. Severe bodily injury (i.e., scalding or chilling) and/or death may result depending upon system water pressure changes and/or supply water temperature changes. ASSE standard 1016, 1069 or 1070 listed devices should be used at fixtures to prevent possible injury.

These Hot Water Tempering Valves are designed to be installed at or near the boiler or water heater. They are not designed to compensate for system pressure fluctuations and should not be used where ASSE standard 1016, 1069 or 1070 devices are required. These valves should never be used to provide "anti-scald" or "anti-chill" service.

The components of the system must be of materials with a construction capable of withstanding the high limit output temperatures of the water heating source.

⚠ WARNING

Need for Periodic Inspection and Yearly Maintenance: Periodic inspection and yearly maintenance by a licensed contractor is required. Corrosive water conditions, inlet temperatures over 200°F (93°C), and/or unauthorized adjustments or repair could render the valve ineffective for service intended. Regular checking and cleaning of the valve's internal components and check stops helps assure maximum life and proper product function. Frequency of cleaning and inspection depends upon local water conditions.

⚠ WARNING

Valve should be installed and adjusted by a licensed contractor in accordance with local codes and ordinances. Valves to be installed in an accessible and visible location (non-destructive and observable) where it is accessible for cleaning, service or adjustment. Inspect device annually, including plumbing connections. PEX B (1806) connections for use with Watts WP14C, copper PEX crimp rings.

NOTICE

Inquire with governing authorities for local installation requirements

Watts product specifications in U.S. customary units and metric are approximate and are provided for reference only. For precise measurements, please contact Watts Technical Service. Watts reserves the right to change or modify product design, construction, specifications, or materials without prior notice and without incurring any obligation to make such changes and modifications on Watts products previously or subsequently sold.

WATTS®

Specifications

A Hot Water Temperature Control Valve shall be installed on water heating equipment to provide tempered water to supply piping. Valve shall have a Lead Free* copper silicon alloy body. Lead Free* thermostatic valves shall comply with state codes and standards, where applicable, requiring reduced lead content. The valve shall have integral check valves and operate so the thermostat controls the cold and hot water ports. The valve shall be provided with threaded (-UT), solder (-US), PEX (-PEX), PEX F1960 cold expansion fittings (-CEF)*****, CPVC (-CPVC), Quick-Connect (-QC) or w/press****, union connections. The valve shall be ASSE 1017** certified, IAPMO cUPC certified and approved to CSA B125.3. Valve shall be a Watts Series LF1170M2 or LFL1170M2.

Pressure — Temperature

Minimum Supply Pressure (Static): 30psi (207 kPa)

Inlet Temperatures: hot inlet, 120°F – 200°F (49°C – 93°C), cold inlet, 40°F – 85°F (4°C – 29°C)

Hot Water Inlet to Outlet Temperature Differential: 5°F (3°C) above set point

LF1170M2 Temperature Out: Field range: 90°F – 160°F (32°C – 71°C), adjustable: Accurate within ±3°F (1.7°C)

LFL1170M2 Temperature Out: Field range: 60°F – 120°F (16°C – 49°C), adjustable. Accurate within ±3°F (1.7°C)

Maximum Temperature: 200°F (93°C)

Maximum Pressure: 150psi (1034 kPa)

Maximum Pressure Differential Between Hot and Cold Water Supplies: 25%.

Standards

ASSE 1017 Certified

IAPMO cUPC Certified and approved to CSA B125.3

NSF/ANSI/CAN 61 & NSF/ANSI/CAN 372 Certified

Viega Pro-Press™ connections are optional factory installed fitting on each end of the approved/certified assembly

Dimensions — Weights

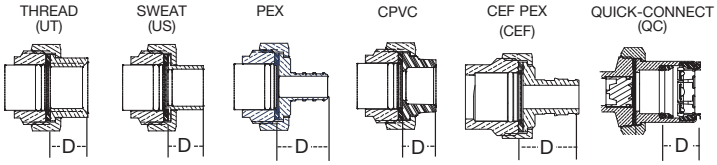

Material

Body:	Lead Free* copper silicon alloy
Springs:	Stainless steel
Thermostat Assembly:	Copper
O-Rings:	EPDM
Pistons:	Polysulfone

Basic Construction

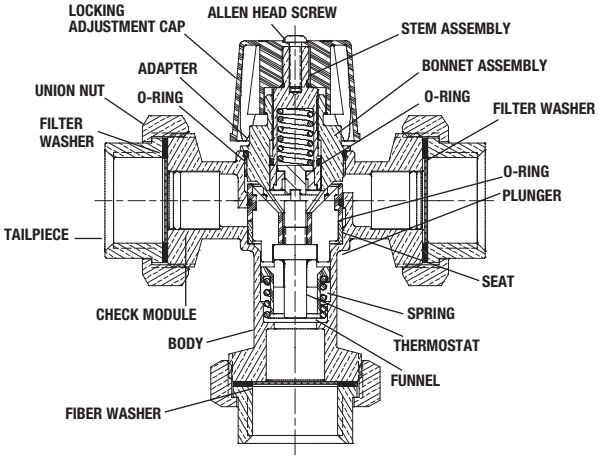

Capacity***

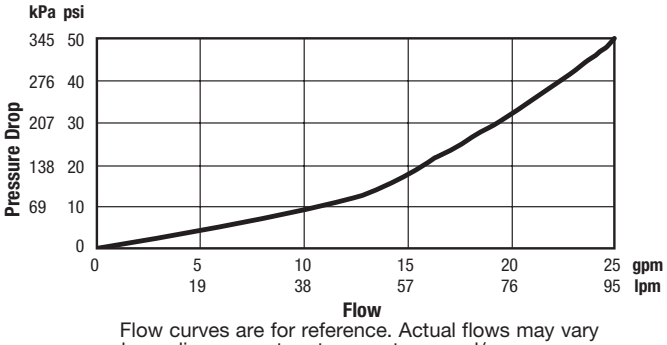

Flow curves are for reference. Actual flows may vary depending on system temperatures and/or pressures.

****Flow curve with integral inlet filters check valves*

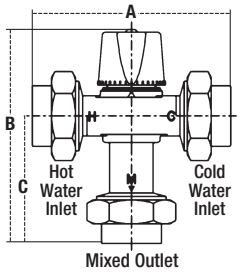

SIZE	MODEL	DIMENSIONS								WEIGHT	
		A		B		C		D			
in.		in.	mm	in.	mm	in.	mm	in.	mm	lbs.	kg
½	LF1170M2-UT	4⅞	124	5⁷⁄₁₆	137	3³⁄₁₆	80	⅝	16	1.8	0.8
¾		4⅞	124	5⁷⁄₁₆	137	3³⁄₁₆	80	⅝	16	2.4	1.1
1		5⁵⁄₁₆	135	5⅝	143	3⅜	86	¾	20	3.0	1.4
½	LF1170M2-US	4¹³⁄₁₆	123	5⅜	137	3⅛	80	⅝	15	1.7	0.8
¾		5⁵⁄₁₆	135	5⅝	143	3⅜	86	⅞	22	2.3	1.0
1		5¹³⁄₁₆	148	5⅞	149	3⅝	92	1⅛	28	2.9	1.3
½	LF1170M2-PEX (For PEX B)	5¼	133	5⁹⁄₁₆	142	3⁵⁄₁₆	85	¹³⁄₁₆	21	1.8	0.8
¾		5½	140	5¹¹⁄₁₆	145	3⁷⁄₁₆	88	¹⁵⁄₁₆	24	2.5	1.1
1		5⅞	149	5⅞	150	3⅝	93	1⅛	29	3.1	1.4
½	LF1170M2-CEF (For PEX A)	5½	140	5¹¹⁄₁₆	144	3⁷⁄₁₆	87	⅞	23	1.8	0.8
¾		6¹⁄₁₆	155	5¹⁵⁄₁₆	151	3¹¹⁄₁₆	94	³⁄₁₆	30	2.4	1.1
½	LF1170M2-CPVC	4¾	121	5⁵⁄₁₆	136	3¹⁄₁₆	79	⁹⁄₁₆	14	1.6	0.7
¾		5¼	133	5⁹⁄₁₆	142	3⁵⁄₁₆	85	¹³⁄₁₆	21	2.2	1.0
1		5¹¹⁄₁₆	144	5¹³⁄₁₆	147	3⁹⁄₁₆	90	1	26	2.6	1.2
½	LF1170M2-QC	6⅝	168	6¼	159	4	102	1½	38	2.1	0.9
¾		6¹⁵⁄₁₆	177	6⁷⁄₁₆	163	4³⁄₁₆	106	1¹¹⁄₁₆	42	2.8	1.3
1		7⅛	181	6½	165	4¼	108	1¾	44	3.5	1.6

Note: Consult factory for dimensions w/press

USA: T: (978) 689-6066 • Watts.com
Canada: T: (888) 208-8927 • Watts.ca
Latin America: T: (52) 55-4122-0138 • Watts.com

© 2022 Watts

Pipe Insulation — Fiberglass with ASJ Jacket
Johns Manville Micro-Lok HP
D-701A – 19”x30” Elliptical Pipe Culvert

Taxiway B
P-701B – Elliptical Pipe Flared End Sections

Taxiway B
P-701C & P-701E – 18” & 24” RCP
Pipe Culvert

Taxiway B
P-701D – 18” RCP Pipe Flared End Sections

Taxiway B
D-701f 12” HDPE Pipe Culvert

Taxiway B
D-701g 12” HDPE Pipe End Section

Taxiway B
D-705A – 6” Pipe Underdrain

Taxiway B
D-705B – 6” Solid Drain Pipe

Taxiway B
D-751A - Inlet

Taxiway B
D-751B – Manhole

Taxiway G
P-701C – 18” RCP

Taxiway G
D-751A – Inlet

Taxiway G
D-705A & D-705B – 6” Perforated and Solid Pipe Underdrain

Taxiway G
D-705C – Infiltration Basin

#70 Steel Casing

#71 – 24” Pipe CWD

#72 – 24” MJ BFV

#73 – Hydrant Connection

MECHANICAL INSULATION

MICRO-LOK® *HP*

HIGH-PERFORMANCE FIBERGLASS PIPE INSULATION

DATA SHEET

DESCRIPTION

Micro-Lok *HP* fiberglass pipe insulation is a high-performance insulation made from biosoluble glass fibers bonded with a thermosetting resin and produced in 36" (0.92 m) lengths. Micro-Lok *HP* insulation is used to insulate standard iron pipe, plastic pipe and copper tubing. The 3' (0.92 m) sections are available plain or with a factory-applied vapor-barrier jacket. The all-service (ASJ) vapor-retarder jacket includes a longitudinal, self-sealing closure lap. The jacket system is adhered to each fiberglass section using a specially formulated adhesive to ensure jacket securement.

The factory-installed tape system permits installation at ambient temperatures down to 20°F (-7°C) and will not soften or separate when exposed to high ambient temperatures and humidity.

USES

Micro-Lok *HP* fiberglass pipe insulation is suitable for installation over hot, cold, concealed and exposed piping systems with operating temperatures up to 850°F (454°C). Weather-protective jacketing is required for outdoor applications. Pipes operating below ambient temperatures require all joints to be sealed with the factory-applied, self-seal lap and butt strips. Micro-Lok HP is UL listed and labeled over plastic pipes for air plenum applications when used at 1.0" thickness or greater.

PHYSICAL PROPERTIES

Service Temp. Range (ASTM C411)	0°F to 850°F (-18°C to 454°C)
Moisture Sorption	<5% by weight
Corrosivity (ASTM C1617)	<5 ppm chloride standard
Shrinkage (ASTM C356)	None
Microbial Growth (ASTM C1338)	Does not promote microbial growth
Surface Burning Characteristics	Composite FHC 25/50 per ASTM E84, NFPA 255, CAN/ULC S102.2
Limited Combustibility	NFPA 90A and 90B
Jacketing	ASTM C1136 (Type I & II)
Water Vapor Permeance (ASTM E96 – Procedure A)	0.02 perms max.
Burst Strength (ASTM D774)	55 lbs/in^2 (4.6 Kg/cm^2)
Tensile Strength (ASTM D828)	45 lbs./in. (7.9N/mm) width min. (MD) 30 lbs./in. (5.23N/mm) width min. (CD)

SPECIFICATION COMPLIANCE

- ASTM C547 Type I (Replaces HH-I-558B, Form D, Type III, Class 12, Class 13 up to 850°F [454°C])
- ASTM C585 – Dimension Standard
- ASTM C1136 (Jacketing) (Replaces HH-B-100B, Type I & II)
- MIL-DTL-32585 Type 1, Form 4, Facing A (unjacketed only)
- MIL-I-22344D, MIL-PRF-22344E
- Coast Guard/IMO Approved 164.109/56/0 (plain, unjacketed only – excluding $^7/_8$ x ½ [22 mm x 13 mm], ½ x ½ [13 mm x 13 mm])
- Bureau of Household Goods and Services CA-T1039 (CO)
- Firestop Assemblies: Meets requirement for jacketed fiberglass pipe insulation product density at or above 3.5 pcf.
- ASTM E84, CAN ULC S102.2 – 25/50 listed and labeled Intertek testing laboratories, listed and labeled Underwriter Laboratories
- NRC 1.36, ASTM C795, MIL-I-24244C, MIL-DTL-24244D*

*When ordering material to comply with these specifications a statement of that fact must appear on the purchase order. Specific lot testing will be conducted and a certification of compliance can be provided.

Operating Temperature Limits: 0°F to 850°F (-18°C to 454°C)

THERMAL CONDUCTIVITY ("K") *

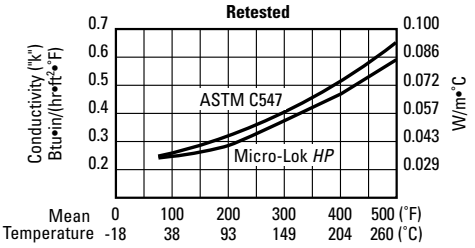

Mean Temperature	°F	75	100	200	300	400	500
	°C	24	38	93	149	204	260
Btu•in/(hr•ft²•°F)		0.23	0.24	0.28	0.34	0.44	0.55
W/m•°C		0.034	0.035	0.040	0.049	0.063	0.079

* Apparent thermal conductivity values are determined by applying procedures dictated per ASTM C1045 on test data obtained using ASTM Test Method C335. All values are based on nominal manufacturing and testing parameters, are subject to normal variation, and are not guaranteed for specification purposes or otherwise.

SUSTAINABLE BUILDING ATTRIBUTES

Manufacturing Location	Defiance, Ohio (43512)	
Recycled Content (glass only)	41%	
Recycled Content (total product)	28%	
Volatile Organic Compounds (ASTM D5116) (Analysis ASTM D6196 & ASTM D5197)	Total	0.22 g/l
Fiberglass Pipe Insulation	Formaldehyde Aldehydes	0.009 ppm 0.043 ppm
Volatile Organic Compounds (Calculated) Self-Sealing Lap & Butt Strips	Total	<49 g/l

SUSTAINABLE BUILDING CERTIFICATIONS

GREENGUARD® GREENGUARD® GOLD	Certified Certified
LEED® Credits LEED-NC	To see LEED info call technical support

GREENGUARD PRODUCT CERTIFIED FOR LOW CHEMICAL EMISSIONS UL.COM/GG UL 2818 GOLD

CERTIFIED RECYCLED CONTENT SCS GLOBAL SERVICES AVERAGE 25% RECYCLED CONTENT POST-CONSUMER

Intertek

CLASSIFIED UL Insulated Plastic Pipe Assemblies (BSMP)

MICRO-LOK® *HP*

HIGH-PERFORMANCE FIBERGLASS PIPE INSULATION

DATA SHEET

SIZE AVAILABILITY

Insulation Thickness		Iron Pipe Size Range		Copper Tubing Size Range	
in.	mm	in.	mm	in.	mm
½	13	½–6	13–152	⅝–4⅛[§]	16–105
1	25	½–24	13–610	⅝–6⅛	16–156
1½	38	½–24	13–610	⅝–6⅛	16–156
2	51	½–24	13–610	1⅛–6⅛	29–156
2½	64	1–24	25–610	1⅜–6⅛	35–156
3	76	1–24	25–610	1⅜–6⅛	35–156
3½	89	1½–24[*]	38–610	–	–
4	102	3–24[**]	76–610	–	–
4½	114	3–24[†]	76–610	–	–
5	127	3–20[††]	76–508	–	–

Notes:

[*] *2½" and 23" IPS not available in this insulation thickness.*

[**] *22" and 23" IPS not available in this insulation thickness.*

[†] *21," 22" and 23" IPS not available in this insulation thickness.*

[††] *19" IPS not available in this insulation thickness.*

[§] *3⅝" CTS not available in this insulation thickness.*

ACOUSTIC - INSERTION LOSS

Insertion loss data for Johns Manville pipe insulation acoustic treatments tested per ASTM E1222

Frequency	1-in Micro-Lok HP	1-in Micro-Lok HP with Zeston PVC (20 mil)	1-in Micro-Lok HP with MLV (1 psf)	2-in Micro-Lok HP	2-in Micro-Lok HP with Zeston PVC (20 mil)	2-in Micro-Lok HP with MLV (1 psf)
Hz	dB	dB	dB	dB	dB	dB
315	2	1	10	1	0	12
400	2	4	13	0	8	17
500	3	5	14	1	10	19
630	5	11	21	6	14	21
800	7	13	20	8	15	22
1000	9	19	25	13	20	29
1250	10	20	28	14	22	31
1600	13	24	33	17	26	37
2000	15	27	35	20	29	39
2500	17	29	36	21	30	38
3150	19	30	36	23	32	40
4000	20	29	36	26	34	41
5000	22	30	36	29	34	38

ACOUSTIC - TRANSMISSION LOSS

Transmission loss data and sound transmission class (STC) for Johns Manville pipe insulation acoustic treatments tested per ASTM E90

Frequency	1-in Micro-Lok HP	1-in Micro-Lok HP with Zeston PVC (20 mil)	1-in Micro-Lok HP with MLV (1 psf)	2-in Micro-Lok HP	2-in Micro-Lok HP with Zeston PVC (20 mil)	2-in Micro-Lok HP with MLV (1 psf)
Hz	dB	dB	dB	dB	dB	dB
125	4	7	15	6	8	15
250	4	7	18	6	8	20
500	4	11	23	7	15	29
1000	7	19	32	12	25	38
2000	14	25	38	20	32	45
4000	21	29	44	30	38	51
STC	8	16	28	12	19	31

QUALIFICATIONS FOR USE

A sufficient thickness of insulation must be used to keep the maximum surface temperature of Micro-Lok *HP* insulation below 150°F (66°C). In addition, at operating temperatures above 500°F (260°C), Micro-Lok *HP* pipe insulation must be applied in a thickness ranging from 2" (51 mm) minimum to 6" (152 mm) maximum.

During initial heat-up to operating temperatures above 350°F (177°C), an acrid odor and some smoke may be given off as the organic binders used in the fiberglass pipe insulation begin to decompose. When this occurs, caution should be exercised to ventilate the area well. This loss of binder does not directly affect the thermal performance of the pipe insulation, but the compressive strength and resiliency of the product are reduced. For applications with excessive physical abuse or vibration at high temperatures, consult your local Insulation Systems Market Development Manager for alternate material recommendations.

CHILLED WATER SYSTEMS

For chilled water systems, see 3-Part Specification, MECH-261.

APPLICATION RECOMMENDATIONS*

MICRO-LOK *HP* PIPE INSULATION AND BUTT STRIPS

1. Do not apply Micro-Lok *HP* insulation if air temperature is below 20°F (-7°C) or above 130°F (54°C) due to the effect of temperature on tape performance. We recommend stapling when application falls outside this temperature range.

When stapling, we recommend mastic be applied over staples to prevent moisture penetration.

2. If stored below 20°F (-7°C) or above 130°F (54°C), insulation cartons should stand within the recommended temperature range for 24 hours prior to application.

3. Once release paper is removed, both adhesive and lap must be kept free of dirt and water, and the lap sealed immediately.

4. When adhered, the lap and butt strips must be pressurized by rubbing firmly with a plastic squeegee or the back of a knife blade to ensure positive closure.

**For complete application recommendations and installation instructions, see MECH-261 InsulSpec Specifications.*

Johns Manville
717 17th St.
Denver, CO 80202
800-654-3103
www.JM.com

North American Sales Offices, Insulation Systems

Eastern Region and Canada
P.O. Box 158
Defiance, OH 43512
800-334-2399
Fax: 419-784-7866

Western Region
P.O. Box 5108
Denver, CO 80217
800-368-4431
Fax: 303-978-4661

MECH-228 07/31/25 (Replaces 11/08/23)

Technical specifications as shown in this literature are intended to be used as general guidelines only. Please refer to the Safety Data Sheet and product label prior to using this product. The physical and chemical properties of Micro-Lok *HP* listed herein represent typical, average values obtained in accordance with accepted test methods and are subject to normal manufacturing variations. They are supplied as a technical service and are subject to change without notice. Any references to numerical flame spread or smoke developed ratings are not intended to reflect hazards presented by these or any other materials under actual fire conditions. Check with your customer service representative for current information.

All Johns Manville products are sold subject to Johns Manville's standard Terms and Conditions, which includes a Limited Warranty and Limitation of Remedy. For a copy of the Johns Manville standard Terms and Conditions or for information on other Johns Manville thermal insulation and systems, visit www.jm.com/terms-conditions or call (800) 654-3103.

© 2025 Johns Manville. All Rights Reserved.