Submittal Cover Page

		Submittal #	1 Drainage
		Submittal WW-02	
		DATE	5/20/2021
		Project Name	
TO:	Roop Excavating		
	Jef Roop	O'Reilly Clifton	
		PROJECT #	

Summary

ATTACHMENTS:	Materials Technical Data Sheets

SUBMITTED BY:	Mark D Vogel
	Grand Junction Winwater Company

GRAND JUNCTION Winwater COMPANY

Customer Name

Job Name Line 1

Job Name Line 2

Materials Submittal Index

Materials List

Bid Item	Manufacturer	# of Pages
	Manufacturer	# of Pages
	Manufacturer	# of Pages
	Manufacturer	# of Pages
	Manufacturer	# of Pages
	Manufacturer	# of Pages
	Manufacturer	# of Pages
	Manufacturer	# of Pages

GRAND JUNCTION Winwater COMPANY

Customer Name

Job Name Line 1

Job Name Line 2

Materials Submittal Index

Materials List

	Manufacturer	# of Pages
	Manufacturer	# of Pages
	Manufacturer	# of Pages
	Manufacturer	# of Pages
	Manufacturer	# of Pages
	Manufacturer	# of Pages
	Manufacturer	# of Pages
	Manufacturer	# of Pages

Customer Name

Job Name Line 1
Job Name Line 2

Materials Submittal Index

Materials List

Reduced Pressure Zone Backflow Preventer — 2"	Watts	4
Double Check Valve Assembly — 1"	Watts	4

Reduced Pressure Zone Backflow Preventer — 2"

Watts LF909-QT

D-701A – 19”x30” Elliptical Pipe Culvert

Taxiway B
P-701B – Elliptical Pipe Flared End Sections

Taxiway B
P-701C & P-701E – 18” & 24” RCP
Pipe Culvert

Taxiway B
P-701D – 18” RCP Pipe Flared End Sections

Taxiway B
D-701f 12” HDPE Pipe Culvert

Taxiway B
D-701g 12” HDPE Pipe End Section

Taxiway B
D-705A – 6” Pipe Underdrain

Taxiway B
D-705B – 6” Solid Drain Pipe

Taxiway B
D-751A - Inlet

Taxiway B
D-751B – Manhole

Taxiway G
P-701C – 18” RCP

Taxiway G
D-751A – Inlet

Taxiway G
D-705A & D-705B – 6” Perforated and Solid Pipe Underdrain

Taxiway G
D-705C – Infiltration Basin

#70 Steel Casing

#71 – 24” Pipe CWD

#72 – 24” MJ BFV

#73 – Hydrant Connection

For Health Hazard Applications

Job Name _____ Contractor _____

Job Location _____ Approval _____

Engineer _____ Contractor's P.O. No. _____

Approval _____ Representative _____

LEAD FREE*

Series LF909

Reduced Pressure Zone Assemblies

Sizes: 2½" – 10" (65–250mm)

Series LF909 Reduced Pressure Zone Assemblies are designed to provide cross-connection control protection of the potable water supply in accordance with national plumbing codes. This series can be utilized in a variety of installations, including health hazard cross-connections in plumbing systems or for containment at the service line entrance. With its exclusive relief valve design incorporating the "air-in/water-out" principle, it provides substantially improved relief valve discharge performance during the emergency conditions of combined backsiphonage and backpressure with both checks fouled. The LF909 features Lead Free* construction to comply with Lead Free* installation requirements.

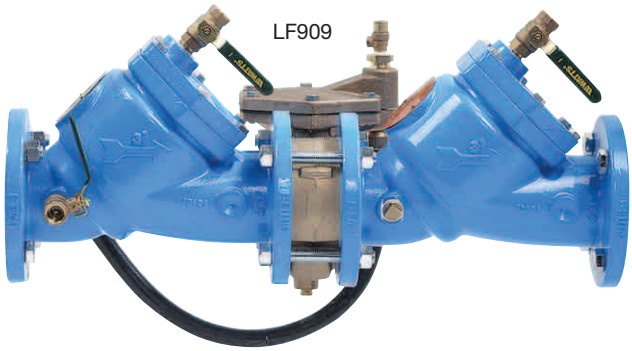

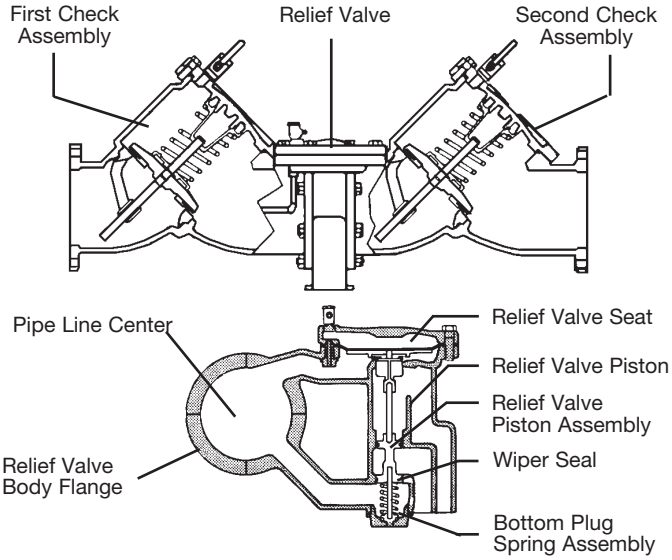

Features

- Replaceable seats
- Stainless steel internal parts
- No special tools required for servicing
- Captured spring check assemblies
- Fused epoxy coated & lined checks
- Industrial strength sensing hose
- Field reversible relief valve
- Air-in/water-out relief valve design provides maximum capacity during emergency conditions

Available Models

Suffix:

LF –	without shutoff valves
NRS –	non-rising stem resilient seated gate valves
OSY -	UL/FM outside stem & yoke resilient seated gate valves
QT-FDA –	FDA epoxy coated quarter-turn ball valves
S-FDA –	FDA epoxy coated strainer

Note: The installation of a drain line is recommended. When installing a drain line, an air gap is necessary.

Now Available
WattsBox Insulated Enclosures.
For more information, send for literature ES-WB.

NOTICE

Inquire with governing authorities for local installation requirements

***The wetted surface of this product contacted by consumable water contains less than 0.25% of lead by weight.**

Specifications

A Reduced Pressure Zone Assembly shall be installed at each cross-connection to prevent backsiphonage and backpressure backflow of hazardous materials into the potable water supply. The assembly shall consist of a pressure differential relief valve located in a zone between two positive seating check valves and captured springs. Backsiphonage protection shall include provision to admit air directly into the reduced pressure zone via a separate channel from the water discharge channel. The assembly shall include two tightly closing shutoff valves before and after the valve and test cocks. The Lead Free* Reduced Pressure Zone Assembly shall comply with state codes and standards, where applicable, requiring reduced lead content. The assembly shall meet the requirements of ASSE Std. 1013; AWWA Std. C511-92; CSA B64.5; and UL Classified File No. EX3185. Listed by IAPMO (UPC). Approved by the Foundation for Cross-Connection Control and Hydraulic Research at the University of Southern California. The assembly shall be a Watts Series LF909.

Watts product specifications in U.S. customary units and metric are approximate and are provided for reference only. For precise measurements, please contact Watts Technical Service. Watts reserves the right to change or modify product design, construction, specifications, or materials without prior notice and without incurring any obligation to make such changes and modifications on Watts products previously or subsequently sold.

WATTS®

Materials

Check Valve Bodies: FDA epoxy coated cast iron

Seats: Stainless steel

Trim: Stainless steel

Relief Valve Body: 2½"-3" (60-80mm) Lead Free* cast copper silicon alloy
4"-10" (100-250mm) FDA epoxy coated cast iron

Test Cocks: Lead Free* copper silicon alloy

Pressure — Temperature

Temperature Range: 33°F-110°F (0.5°C-43°C) continuous, 140°F (60°C) intermittent

Maximum Working Pressure: 175psi (12.06 bar)

Standards

AWWA C511-92

IAPMO PS 31, SBCCI (Standard Plumbing Code)

USC manual for Cross-Connection Control, 8th Edition

***The wetted surface of this product contacted by consumable water contains less than 0.25% of lead by weight.**

How It Operates

The unique relief valve construction incorporates two channels: one for air, one for water. When the relief valve opens, as in the accompanying air-in/water-out diagram, the right-hand channel admits air to the top of the reduced pressure zone, relieving the zone vacuum. The channel on the left then drains the zone to atmosphere. Therefore, if both check valves foul, and simultaneous negative supply and positive backpressure develops, the relief valve uses the air-in/
water-out principle to stop potential backflow.

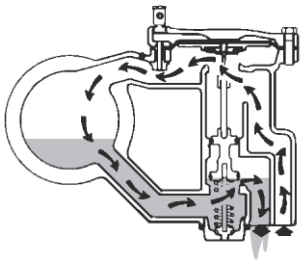

Approvals

1013 B64.4

Approved by the Foundation for Cross-Connection Control and Hydraulic Research at the University of Southern California.

Capacity

*Typical maximum flow rate (7.5 feet/sec.)

2½" (65mm)

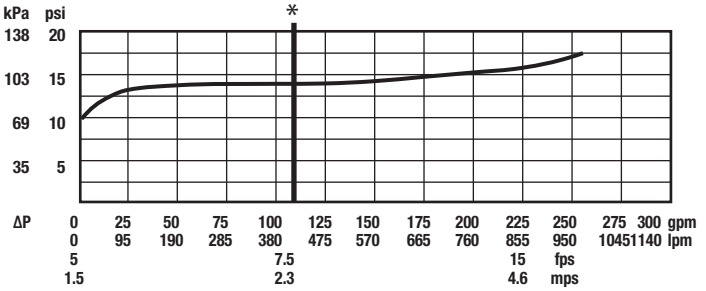

3" (80mm)

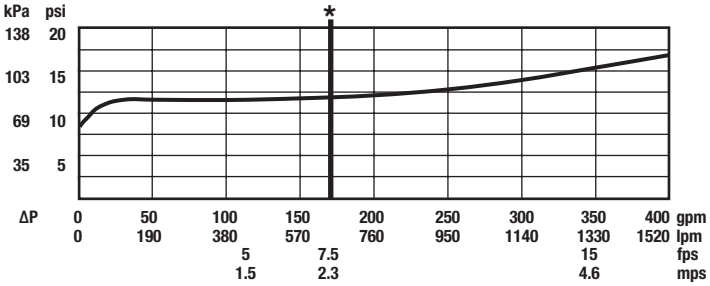

4" (100mm)

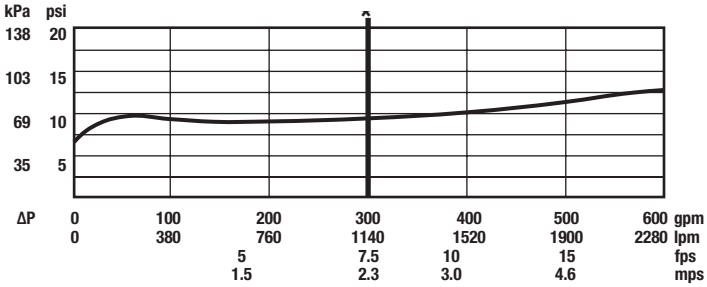

6" (150mm)

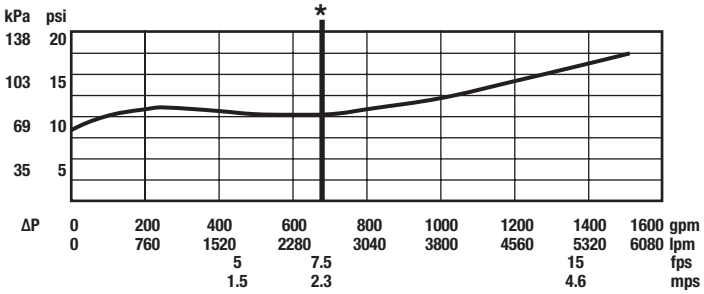

8" (200mm)

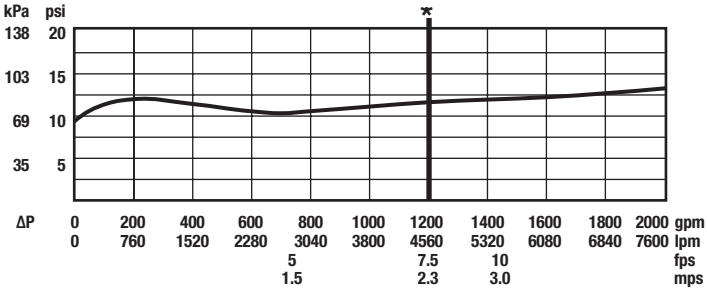

10" (250mm)

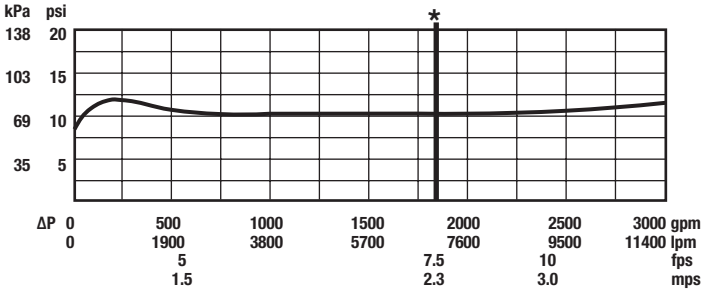

Dimensions — Weights

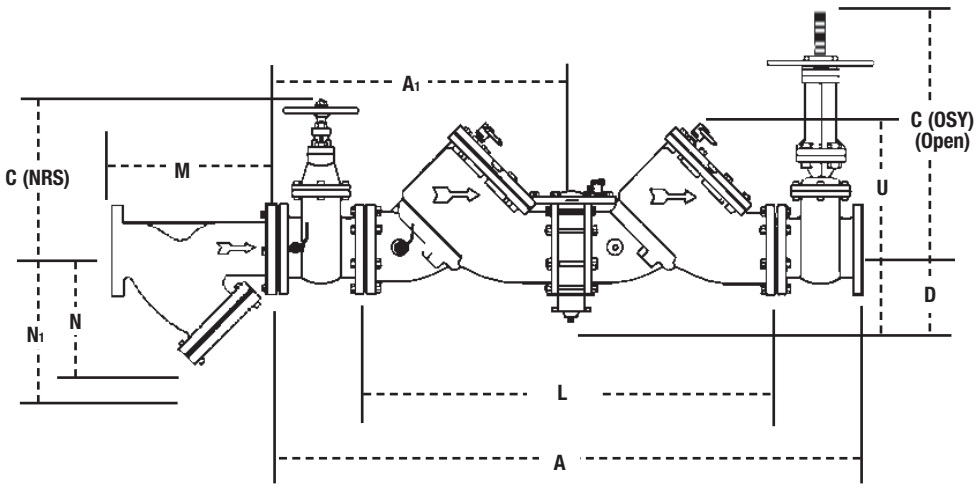

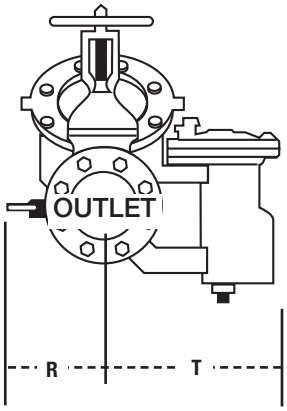

Quarter-turn (QT) Valve

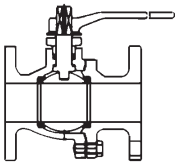

Watts G-4000 Series
Ball Valves
Send for F-G4000

NOTE: Valve may be furnished with (2) OSY or (2) NRS Shutoffs.

NOTE: Relief valve section is reversible, therefore, can be on either side and is furnished standardly as shown.

SIZE (DN)		DIMENSIONS																				WEIGHT					
		A		A1		C clearance for check (OSY)*		C clearance for check (NRS)		D		L		U		R		R (QT)		T		NRS		OSY		QT	
in.	mm	in.	mm	in.	mm	in.	mm	in.	mm	in.	mm	in.	mm	in.	mm	in.	mm	in.	mm	in.	mm	lbs.	kgs.	lbs.	kgs.	lbs.	kgs.
2½	65	41¼	1048	20⅝	524	16⅜	416	9⅜	238	5¼	133	26⅛	663	11	279	4	102	16	406	9 1/16	230	195	88.4	198	89.8	182	82.6
3	80	42¼	1073	21¼	540	18⅞	479	10¼	260	5¼	133	26⅛	663	11	279	5	127	16	406	9 1/16	230	225	102	230	104	190	86
4	100	55⅛	1400	27⅝	702	22¾	578	12 3/16	310	6	152	37	940	14	356	6	152	19¾	502	14⅜	365	455	206	470	213	352	160
6	150	65½	1664	32¾	832	30⅛	765	16	406	6	152	44½	1130	16	406	11	279	26	660	14⅜	365	718	326	798	362	762	346
8	200	78½	2000	39⅜	1000	37¾	959	19 15/16	506	9¾	248	55¼	1403	21	533	11¼	286	11¼	286	19¼	489	1350	612	1456	660	2286	1037
10	250	93⅝	2378	46⅞	1190	45¾	1162	23 13/16	605	9¾	248	67⅜	1711	21	533	12½	318	12½	318	21	533	2160	980	2230	1011	3716	1685

*UL, FM approved backflow preventers must include UL/FM approved OSY gate valves.

Strainer Dimensions

SIZE (DN)		DIMENSIONS						WEIGHT	
		M		N1†		N			
in.	mm	in.	mm	in.	mm	in.	mm	lbs.	kgs.
2½	65	10	254	10	254	6½	165	28	12.7
3	80	10⅛	257	10	254	7	178	34	15.4
4	100	12⅛	308	12	305	8¼	210	60	27
6	150	18½	470	20	508	13½	343	133	60
8	200	21⅝	549	22¾	578	15½	394	247	112
10	250	26	660	28	711	18½	470	370	168

† – Dimension required for screen removal

Air Gap Dimensions

When installing a drain line on Series 909 backflow preventers that are installed horizontally, use 909 AG series air gaps.

IRON BODY MODEL NO.	ORDERING CODE	SERIES/SIZES	DIMENSIONS						WEIGHT	
			A		B		C			
			in.	mm	in.	mm	in.	mm	lbs	kgs
909AG-F	881378	11/4" – 3" 009/909 11/4" – 2" 009 M1 2" 009 M2	4⅜	111	6¾	171	2	51	3.25	1.47
909AG-K	881385	4" – 6" 909 8" – 10" 909 M1	6⅜	162	9⅝	244	3	76	6.25	2.83
909AG-M	881387	8" – 10" 909	7⅜	187	11¼	286	4	102	15.5	7.03

For flange size backflow preventers installed vertically (flow down), a fabricated air gap is recommended.

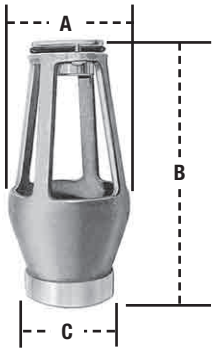

For additional information, visit our web site at: www.watts.com

A Watts Water Technologies Company

USA: Tel: (978) 688-1811 • Fax: (978) 794-1848 • www.watts.com
Canada: Tel: (905) 332-4090 • Fax: (905) 332-7068 • www.watts.ca

ES-LF909L 1318

© 2013 Watts

Double Check Valve Assembly — 1"

Watts LF007M1-QT

D-701A – 19”x30” Elliptical Pipe Culvert

Taxiway B
P-701B – Elliptical Pipe Flared End Sections

Taxiway B
P-701C & P-701E – 18” & 24” RCP
Pipe Culvert

Taxiway B
P-701D – 18” RCP Pipe Flared End Sections

Taxiway B
D-701f 12” HDPE Pipe Culvert

Taxiway B
D-701g 12” HDPE Pipe End Section

Taxiway B
D-705A – 6” Pipe Underdrain

Taxiway B
D-705B – 6” Solid Drain Pipe

Taxiway B
D-751A - Inlet

Taxiway B
D-751B – Manhole

Taxiway G
P-701C – 18” RCP

Taxiway G
D-751A – Inlet

Taxiway G
D-705A & D-705B – 6” Perforated and Solid Pipe Underdrain

Taxiway G
D-705C – Infiltration Basin

#70 Steel Casing

#71 – 24” Pipe CWD

#72 – 24” MJ BFV

#73 – Hydrant Connection

For Non-Health Hazard Applications

Job Name _____ Contractor _____

Job Location _____ Approval _____

Engineer _____ Contractor's P.O. No. _____

Approval _____ Representative _____

LEAD FREE*

Series LF007

Double Check Valve Assemblies

Sizes: ½" – 3" (15 – 80mm)

Series LF007 Double Check Valve Assemblies shall be installed at referenced cross-connections to prevent the backflow of polluted water into the potable water supply. Only those cross-connections identified by local inspection authorities as non-health hazard shall be allowed the use of an approved double check valve assembly. The LF007 features Lead Free* construction to comply with Lead Free* installation requirements.

Check with local authority having jurisdiction regarding vertical orientation, frequency of testing or other installation requirements.

The valve shall meet the requirements of ASSE Std. 1015 and AWWA Std. C510. Approved by the Foundation for Cross-Connection Control and Hydraulic Research at the University of Southern California.

Features

- Ease of maintenance — only one cover
- Top entry
- Replaceable seats and seat discs
- Modular construction
- Compact design
- Lead Free* cast copper silicon alloy body construction — ½" – 2" (15 – 50mm)
- Fused epoxy coated cast iron body — 2½" – 3" (65 – 80mm)
- Top mounted Lead Free* ball valve test cocks
- Low pressure drop
- No special tools required for servicing
- ½" – 1" (15 – 25mm) have tee handles

Specifications

A Double Check Valve Assembly shall be installed at each noted location. The assembly shall consist of two positive seating check modules with captured springs and rubber seat discs. The check module seats and seat discs shall be replaceable. Service of all internal components shall be through a single access cover secured with stainless steel bolts. The Double Check Valve Assemblies shall be constructed using Lead Free* cast copper silicon alloy. Lead Free* Double Check Valve Assemblies shall comply with state codes and standards, where applicable, requiring reduced lead content. The assembly shall also include two resilient seated isolation valves; four top mounted, resilient seated test cocks. The assembly shall meet the requirements of ASSE Std. 1015 and AWWA Std. C510. Approved by the Foundation for Cross-Connection Control and Hydraulic Research at the University of Southern California. Assembly shall be a Watts Series LF007.

¾" (20mm) LF007M3QT

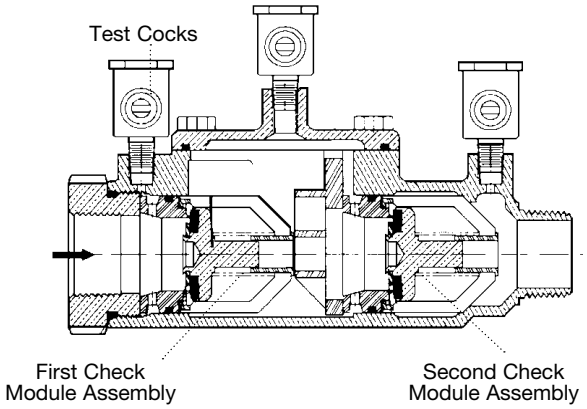

The LF007 Series features a modular design concept which facilitates complete maintenance and assembly by retaining the spring load.

NOTICE

The information contained herein is not intended to replace the full product installation and safety information available or the experience of a trained product installer. You are required to thoroughly read all installation instructions and product safety information before beginning the installation of this product.

Now Available
WattsBox Insulated Enclosures.
For more information, send for literature ES-WB.

NOTICE

Inquire with governing authorities for local installation requirements

***The wetted surface of this product contacted by consumable water contains less than 0.25% of lead by weight.**

Watts product specifications in U.S. customary units and metric are approximate and are provided for reference only. For precise measurements, please contact Watts Technical Service. Watts reserves the right to change or modify product design, construction, specifications, or materials without prior notice and without incurring any obligation to make such changes and modifications on Watts products previously or subsequently sold.

WATTS®

Pressure — Temperature

½" – 2" (15 – 50mm)

Temperature Range: 33°F – 180°F (0.5°C – 82°C).

Maximum Working Pressure: 175psi (12.1 bar).

2½" – 3" (65 – 80mm)

Temperature Range: 33°F – 110°F (0.5°C – 43°C) continuous, 140°F (60°C) intermittent.

Maximum Working Pressure: 175psi (12.1 bar).

Standards

ASSE Std. 1015, AWWA Std. C510

IAPMO PS31, CSA B64.5

Approvals

† ASSE, AWWA, IAPMO, CSA, UPC

▲ Approved by the Foundation for Cross-Connection Control and Hydraulic Research at the University of Southern California.

• Models with suffix LF and S are not listed.

◆ UL Classified (without shutoff valves only) ¾" – 2" (20 – 50mm) (except 007M3LF)

◆ UL Classified with OSY gate valves (2½" and 3" horizontal only.)

▼ ½" - 2" models Lead Free* with strainer

Horizontal and vertical "flow up" approval on all sizes

Models

Sizes:

½" – 2" (15 – 50mm)

Suffix:

S - copper silicon alloy strainer

LF - without shutoff valves

Prefix:

U - Union connections

2½" – 3" (65 – 80mm)

Suffix:

NRS - non-rising stem resilient seated gate valves

OSY - UL/FM outside stem and yoke resilient seated gate valves

LF - without shutoff valves

QT-FDA - FDA epoxy coated quarter-turn ball valves

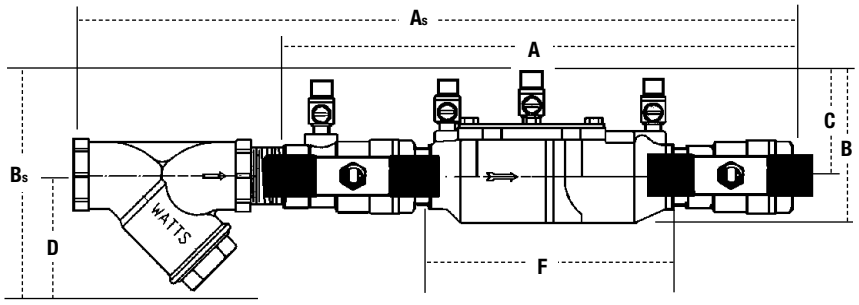

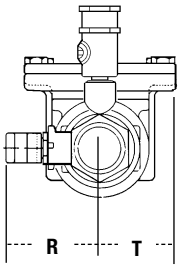

Subscript 'S' = strainer model

Dimensions – Weights

MODEL	SIZE (DN)		DIMENSIONS																WEIGHT	
			A		B		C		D		F		G		R		T			
	in.	*mm*	*in.*	*mm*	*in.*	*mm*	*in.*	*mm*	*in.*	*mm*	*in.*	*mm*	*in.*	*mm*	*in.*	*mm*	*in.*	*mm*	*lbs.*	*kgs.*
†▲▼ LF007QT	½	15	10	254	4⅝	117	2 7/16	62	—	—	5	127	3⅜	85	2 5/16	59	2 1/16	52	4.5	2
†▲▼ LF007M3QT	¾	20	11⅛	282	4	102	3⅛	79	—	—	6 3/16	157	3 7/16	87	2⅛	54	15/16	33	5	2.3
†▲▼ LF007M1QT	1	25	13¼	337	5⅛	130	4	102	—	—	7½	191	3⅜	85	1 11/16	43	1 11/16	43	12	5.4
†▲▼ LF007M2QT	1¼	32	16⅜	416	5	127	3 5/16	84	—	—	9½	241	5	127	3	76	2	50	15	6.8
†▲▼ LF007M2QT	1½	40	16¾	425	4⅞	124	3½	89	—	—	9¾	248	5 13/16	148	3⅛	79	2 11/16	68	15.9	7.2
†▲▼ LF007M1QT	2	50	19½	495	6¼	159	4	102	—	—	13⅜	340	6⅛	156	3 7/16	87	2 11/16	68	25.7	11.7
•▼ LF007QT-S	½	15	13	330	6	152	2 7/16	62	3	76	5	127	3⅜	85	2 5/16	59	2 1/16	52	5.5	2.5
•▼ LF007M3QT-S	¾	20	14½	368	6⅛	156	3⅛	79	3	76	6 3/16	157	3 7/16	87	2⅛	54	15/16	33	6.7	3.1
•▼ LF007M1QT-S	1	25	17 15/16	157	7¾	197	4	102	3¼	83	7½	191	3⅜	85	1 11/16	43	1 11/16	43	14	6.4
•▼ LF007M2QT-S	1¼	32	21½	546	7 1/16	179	3 5/16	84	3½	83	9½	241	5	127	3	76	2	50	19	8.6
•▼ LF007M2QT-S	1½	40	25 1/16	637	7 1/16	179	3½	89	3¾	95	9¾	248	5 13/16	148	3⅛	79	2 11/16	68	19.6	8.9
•▼ LF007M1QT-S	2	50	27¼	692	8¾	222	4	102	4	102	13⅜	340	6⅛	156	3 7/16	87	2 11/16	68	33.5	15.2

Dimensions – Weights

Sizes: 2½" – 3" (65 – 80mm)

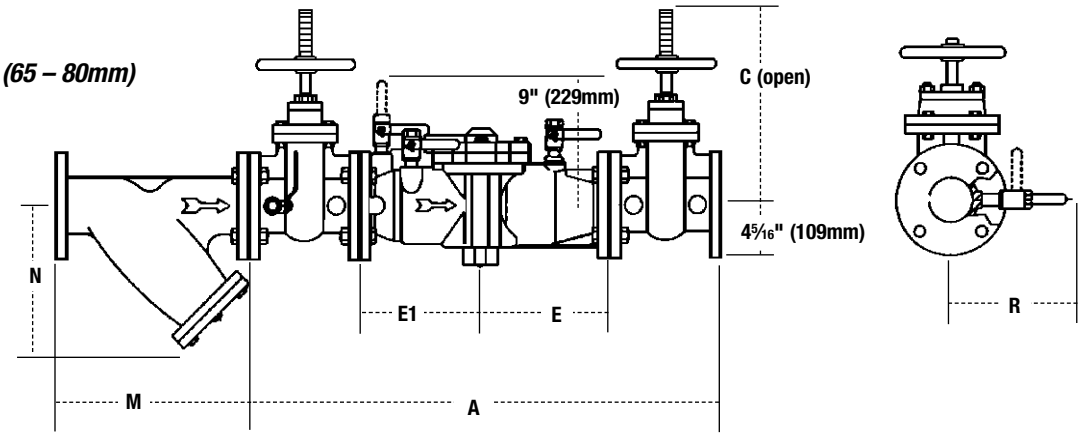

MODEL	SIZE (DN)		DIMENSIONS								WEIGHT	
			A		B		E, E1		R			
	in.	*mm*	*in.*	*mm*	*in.*	*mm*	*in.*	*mm*	*in.*	*mm*	*lbs.*	*kgs.*
LF007QT-FDA	2½	65	33⅛	841	6⅜	162	9 1/16	230	8¾	222	155	70
▲ LF007-NRS	2½	65	33⅛	841	9⅜	238	9 1/16	230	8¾	222	155	70
▲◆ LF007-OSY	2½	65	33⅛	841	16⅜	416	9 1/16	230	8¾	222	158	72
LF007-QT-FDA	3	80	34¼	870	6⅜	162	9 1/16	230	8¾	222	155	70
▲ LF007-NRS	3	80	34¼	870	10¼	260	9 1/16	230	8¾	222	185	84
▲◆ LF007-OSY	3	80	34¼	870	18⅞	479	9 1/16	230	8¾	222	185	84

Strainer Dimensions

SIZE						WEIGHT	
		M		N			
in.	*mm*	*in.*	*mm*	*in.*	*mm*	*lbs.*	*kgs.*
2½	65	10	254	6½	165	28	13
3	80	10⅛	267	7	178	34	15

1" LFU007M1QT

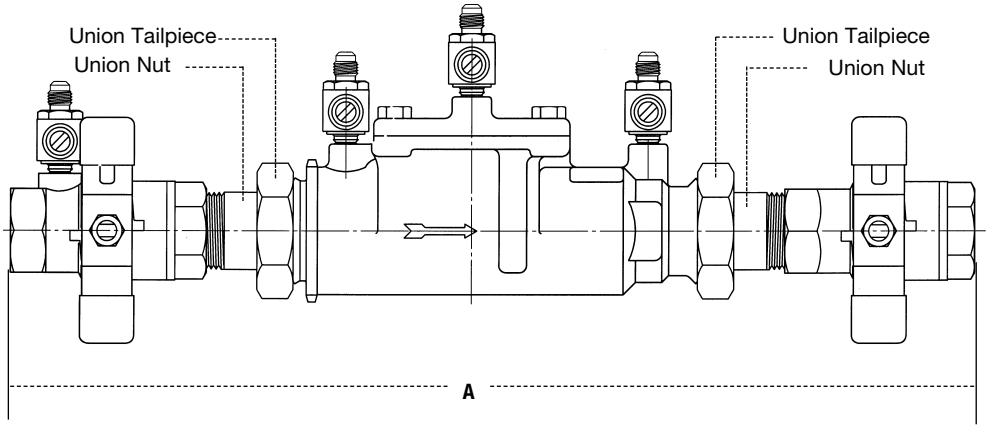

Sizes: ½" – 2" (15 – 50mm)

MODEL	SIZE(DN)		DIMENSIONS	
			A	
	in.	*mm*	*in.*	*mm*
LFU007QT	½	15	12 13/16	326
LFU007M2QT	¾	20	13 13/16	350
LFU007M2QT	1	25	16⅝	422
LFU007M2QT	1¼	32	20¾	527
LFU007M2QT	1½	40	21½	546
LFU007M1QT	2	50	24½	622

Capacity

As compiled from documented Foundation for Cross-Connection Control and Hydraulic Research at the University of Southern California lab tests.

†† Typical maximum system flow rate (7.5 feet/sec., 2.3 meters/sec.)
** UL rated flow

½" (15mm)

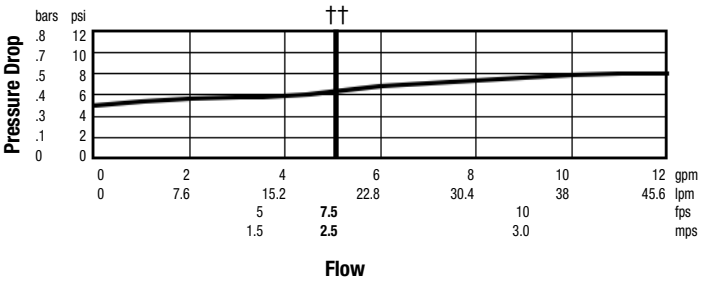

1½" (40mm)

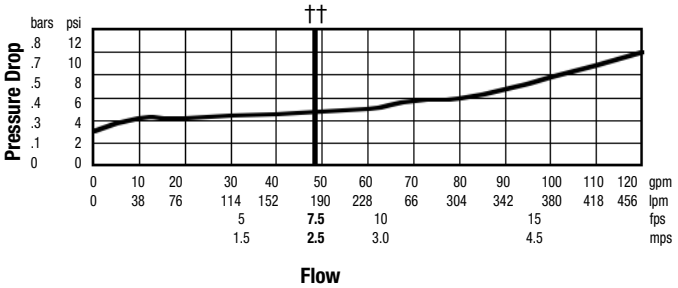

¾" (20mm)

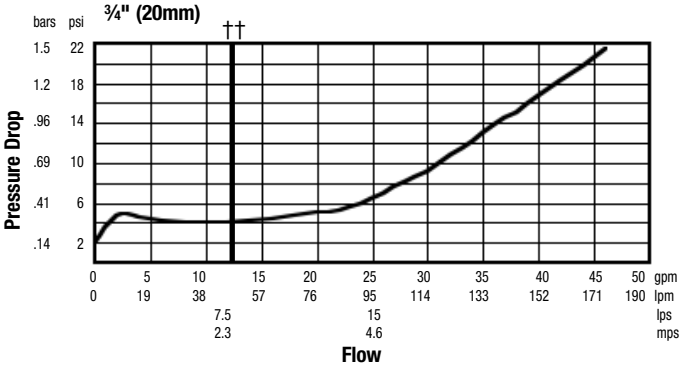

2" (50mm)

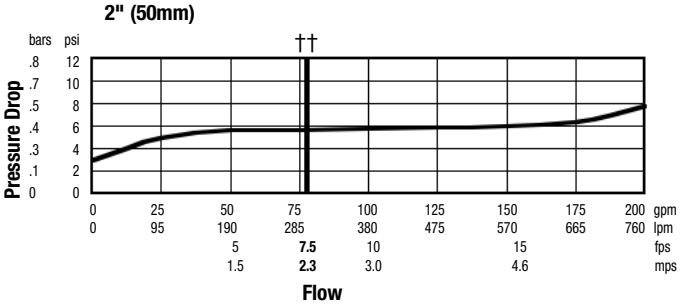

1" (25mm)

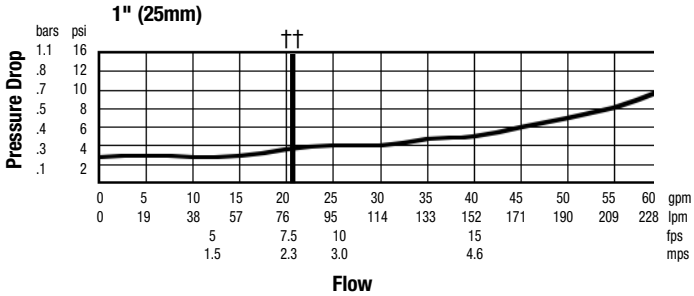

2½" (65mm)

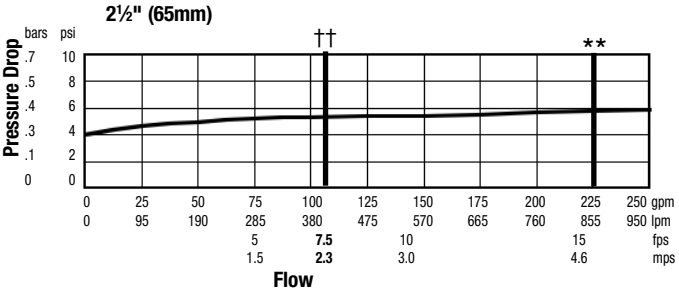

1¼" (32mm)

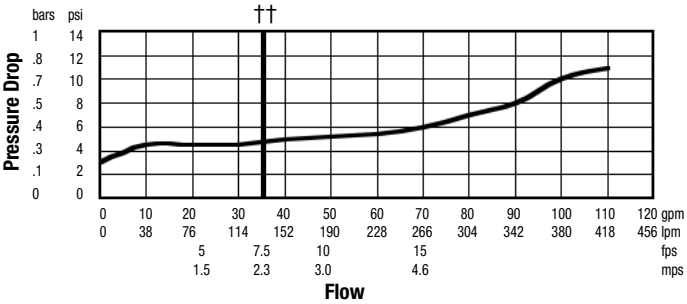

3" (80mm)

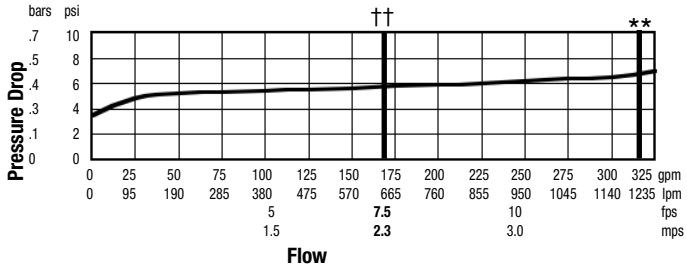

USA: Tel: (978) 689-6066 • Fax: (978) 975-8350 • Watts.com
Canada: Tel: (905) 332-4090 • Fax: (905) 332-7068 • Watts.ca
Latin America: Tel: (52) 81-1001-8600 • Fax: (52) 81-8000-7091 • Watts.com

© 2016 Watts