Name:- somaia mahmoud shapaan

Problem1

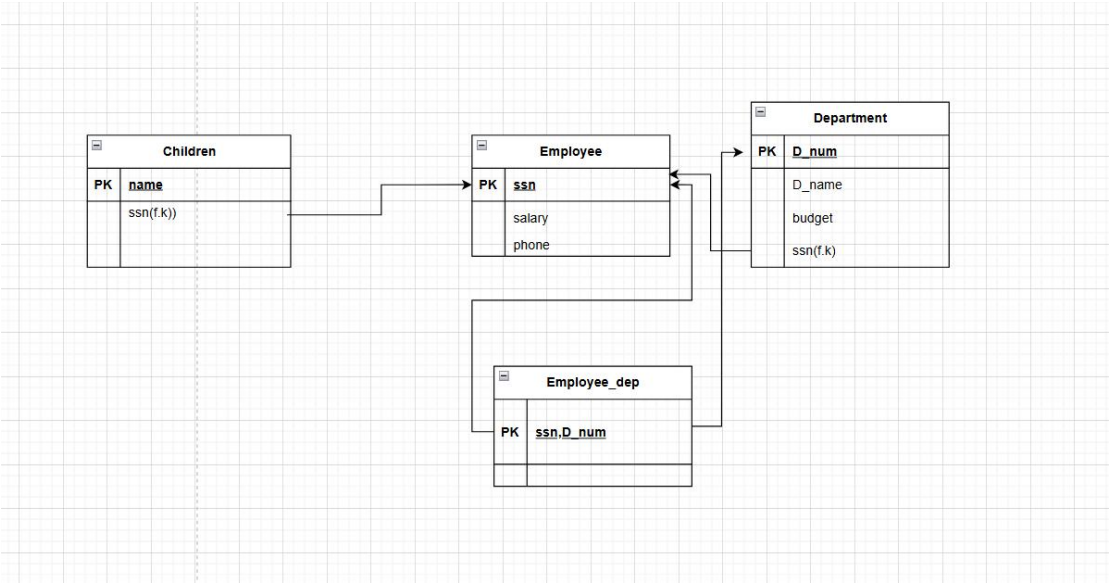

Problem2

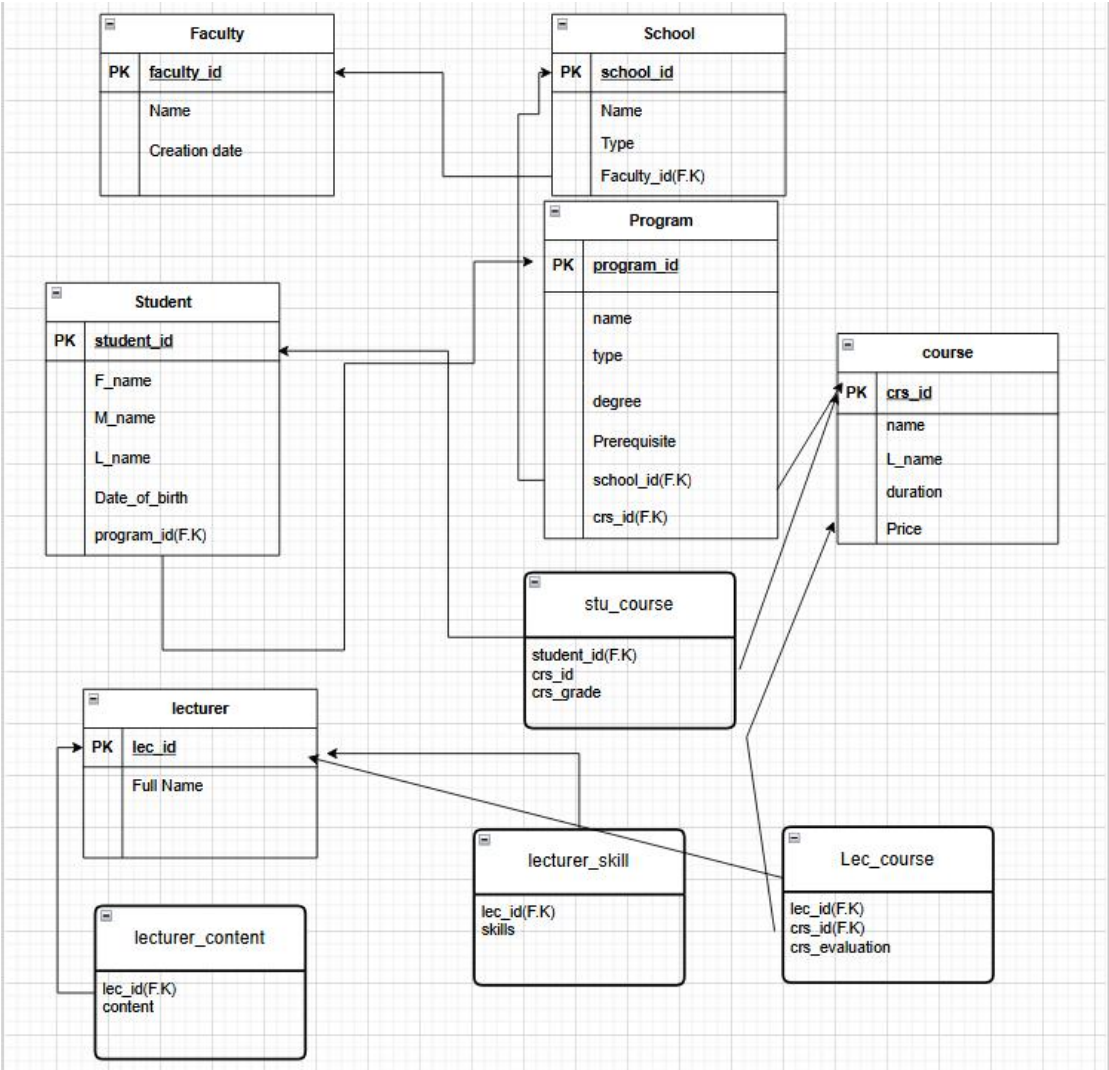
Faculty
PK
faculty_id
Name
Creation date
School
PK
school_id
Name
Type
Faculty_id(F.K)
Program
PK
program_id
name
type
degree
Prerequisite
school_id(F.K)
crs_id(F.K)
Student
PK
student_id
F_name
M_name
L_name
Date_of_birth
program_id(F.K)
course
PK
crs_id
name
L_name
duration
Price
stu_course
student_id(F.K)
crs_id
crs_grade
lecturer
PK
lec_id
Full Name
lecturer_skill
lec_id(F.K)
skills
Lec_course
lec_id(F.K)
crs_id(F.K)
crs_evaluation
lecturer_content
lec_id(F.K)
content