USB Connector

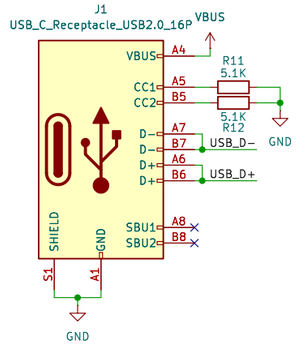

Battery Charger

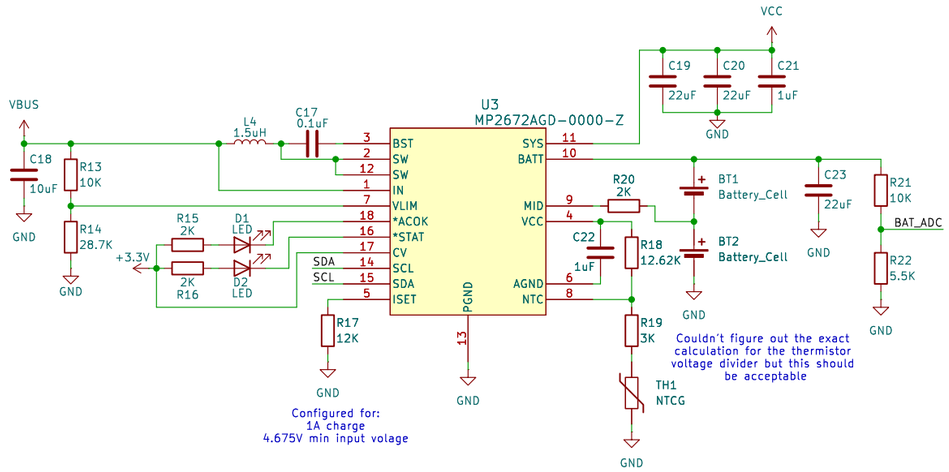

Buck Regulator

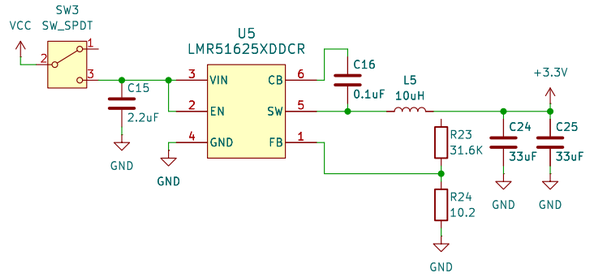

SX1262 LoRa Module

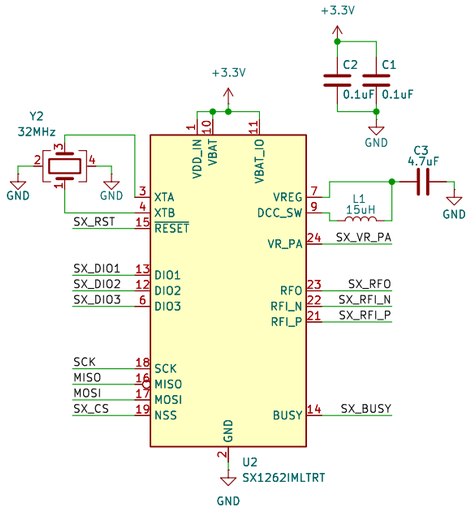

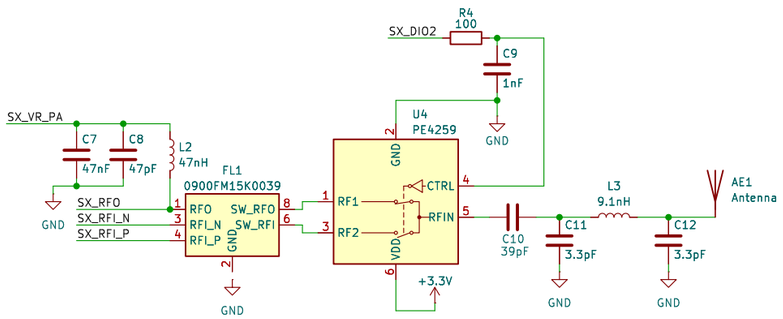

ESP32-S3 Module

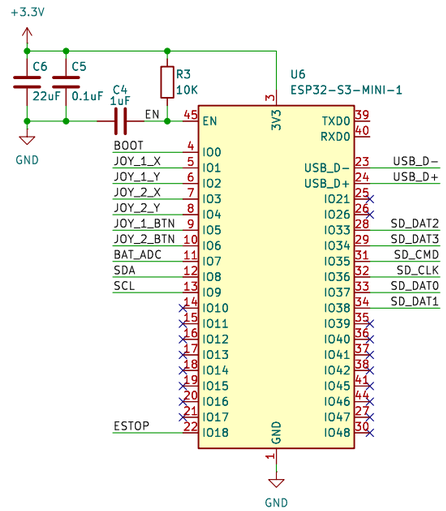

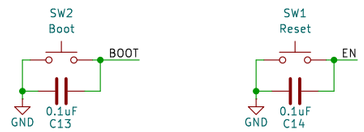

Joysticks

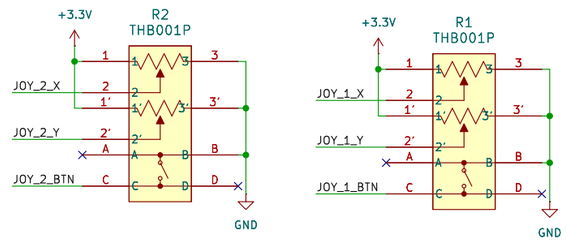

MicroSD Card

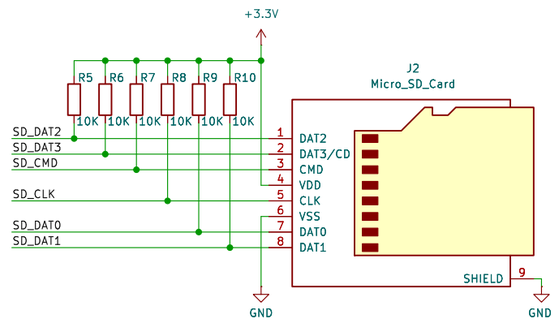

EStop Button

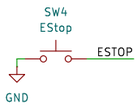

OLED Display

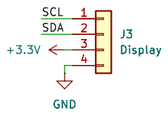

Sheet: /
File: controller.kicad_sch

Title:

Size: A3	Date:	Rev:
KiCad E.D.A. 9.0.6		Id: 1/1