Miscellaneous Tips 1

someonesdad1@gmail.com

Version: 21 Feb 2019

This document is a collection of various tips that I've come across over the years. The tip is original unless I give an attribution.

Dimensions are in inches unless otherwise stated. [*ab:n:m*] means page n of reference [*ab*]; if m is included, it's the PDF page number. Drawings are third angle projections.

Shop techniques

Quickie angle setup

Sometimes you want to hold something in your milling vise or on your drill press table at an angle. Here's are some thoughts on some ways of doing this.

For approximate work, you could make a tool such as (you could call it a tangent bar):

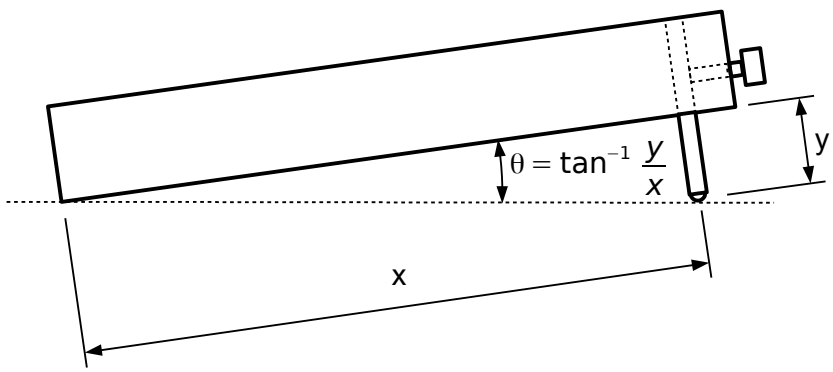

You'd set x to a convenient value and adjust the length of the pin to get the desired tilt (or make it a long setscrew; then the clamping screw isn't needed). If the thickness was adequate, it could also be a tool you set on the top of your vise and sighted over to adjust the workpiece at the desired angle. Copper-coated welding rod gives easy-to-make pins. For precise work, you may want to correct for the spherical tip on the rod.

If your machine table is level, you can include a level vial. Use a wooden carpenter's level or buy a plastic line level and extract the level tube and install it in a piece of wood. Then drill a hold and add a screw to clamp an elevation rod to tilt the level:

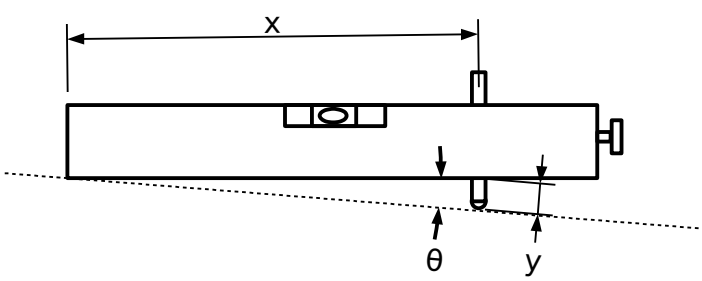

To set an angle θ, calculate y from

$$y = x \tan\theta$$

If the drill press table is not level, measure how much it's out of level and correct for it. Caution: beware of the orthogonal direction in which you level also being out of level -- small rotations of the

level about the vertical axis can then have significant contributions. If you can't avoid this problem, install a fence that guarantees the level is placed against the work consistently.

Then set the level on the work and put shims under the work until the level indicates the work is level.

I once used this setup method on my milling machine to machine the top of an intake manifold for my brother-in-law's (the angle of the carburetor seat meant the whole manifold needed to be shimmed to make the surface to be machined flat). I used a Starrett #133 level and the resulting milled surface was exactly what he wanted. (I was a bit nervous about this setup, as a mistake would have ruined the $500 casting, but things came out perfectly.)

Here's a similar tool based on the principle of a sine bar:

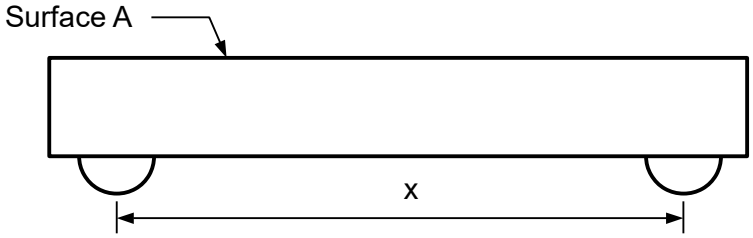

Drill two holes with a center drill a distance of x apart in a chunk of metal. Using hot-melt glue or epoxy, glue two identical ball bearings in these holes. When the glue is cured, set the balls on a parallel in your milling vise and machine surface A flat. If you have a sine bar, you can set it to a known angle and determine the height needed to set this ball gauge to the same angle. Then you can calculate what the distance x actually is. This tool is for use in the milling vise.

For a self-standing gauge, you'd want to replace the balls with some accurately-made cylinders (e.g., some ground drill rod). I'd mill two slots for the cylinders, then mount them to the bar with two spring pins; this would be quick to make. A machinist would make one accurately from high-carbon steel and harden it, but us home-shop machinists who only need such things occasionally would make it from softer materials.

About the fastest way to set shallow angles on the mill is to use the Starrett 457A diemaker's square. This lets you set angles up to 10°. I set the 457A to the desired angle and place it on the work in the vise. Then use a double square setting on the top of the vise jaw; tap the work until it's at the desired angle. This works well to perhaps 0.2° alignments and it's fast.

If you have some time, make up some shallow angle gauges from sheet metal by milling or filing. If you need to set things to certain angles with precision, make a sine bar gauge for the mill or buy precision angle gauges and set the work using the angle gauges and a dial indicator.

How to measure a dovetail

The standard method is to use two ground pins of diameter *d* and measure the distance *L* between them

The distances *a* and *b* are typically not usable for gauging the dovetail because they can be rounded, have dirt, etc. You'd ideally want to measure the dovetail's width at about half the height h/2, shown as the dashed red line.

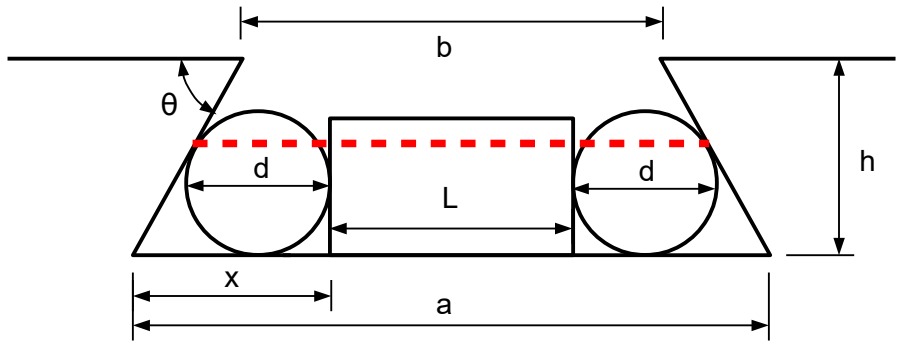

The distance L can be conveniently set and measured with Starrett's 154 adjustable parallel gauges. If you don't have such things, you can make a pair of wedges if you have a mill and use them as follows:

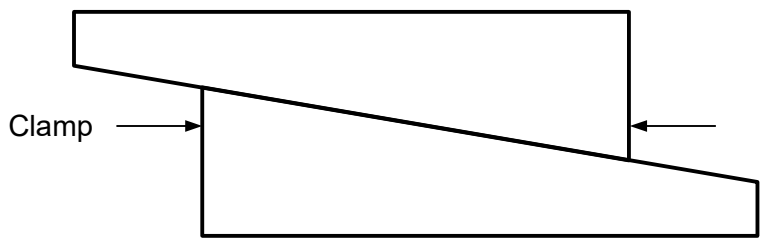

If you don't have a mill, you can make some wedges from a hardwood like oak or maple that will work similarly. 10° is the angle I use for my wedges and Starrett uses the same angle on their adjustable parallels.

Let's derive the equations for this measurement.

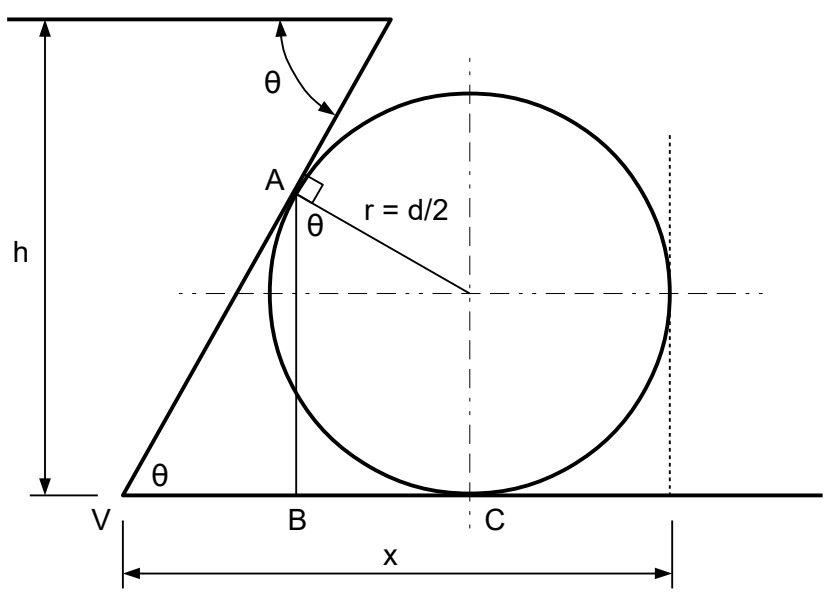

We have

$$x = VB + BC + r$$

We can read off the following values from the diagram

$$BC = r \sin\theta$$

$$\mathrm{VB} = \frac{\mathrm{AB}}{\tan\theta} = \frac{r\left(1+\cos\theta\right)}{\tan\theta}$$

Thus

$$x = r\left[\frac{1+\cos\theta}{\tan\theta}+\sin\theta+1\right] = \frac{r}{\sin\theta}\left(1+\sin\theta+\cos\theta\right)$$

If you want distance AB to be half the dovetail's height *h*, we have

$$r\left(1+\cos\theta\right) = \frac{h}{2}$$

which gives

$$d = \frac{h}{1+\cos\theta}$$

My first lathe project

My grandfather trained and worked as a machinist before World War 1 (he was born in 1892). He went on to own an automobile dealership. After he retired, he had a shop in his house with a 12x36 Clausing lathe. He would make brass boat shafts for my father, who had a boat store. When I was was around 13 years old, I was very interested in his shop and particularly that lathe. He also made us brass rings and the brass curly chips from the lathe were used to decorate our Christmas trees.

Alas, the only time I ever spent with him working on that lathe was when he said he'd show me how to make a simple lathe project. He made the first one and talked me through it, showing me each step. The only tools he used were some thread calipers, a center gauge, and a 6 inch rule.

After walking me through it, he went upstairs to watch TV with my grandmother while I made one by myself. I'd run all the way upstairs to the other end of the house (they had a big house), ask him a question, then run back down and continue the lathe work.

Here's a sketch of the two parts I made:

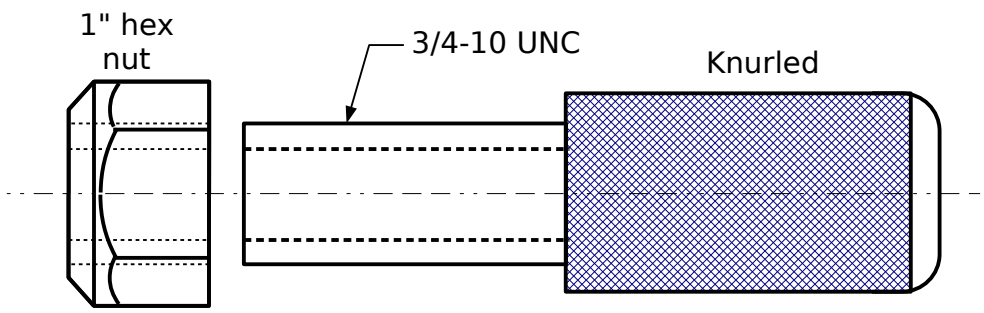

The knurled part was made from 1 inch diameter brass boat shaft material and the hex nut was made from 1 inch brass hex bar stock.

The lathe had a 3-jaw chuck. The knurled portion was turned down and the radius on the end was filed. The knurling was put on; it's a functional knurl, but not a good example of crisp knurling. The piece was cut off to length and turned around; the chuck jaws held on the knurl and I can still see the three dings from the chuck jaws. The end was center-drilled and guided by a live center.

I'd make the thing differently today -- the shaft end would be center-drilled, the thread turned, then the knurl made, the radius on the end filed, then the piece would be parted off.

The OD of the thread was turned to size using a rule and the outside thread calipers. Once the OD was to size, I set the lathe's gearbox to cut a 10 tpi thread and used a chart on the wall to determine the root diameter of the thread. The thread calipers were set to this value and used to check the thread after each cut.

Those thread calipers were made by Stevens, probably before 1900. They are the most beautifully

made calipers I've ever seen, although they look nondescript from a distance. But, if you're a machinist and you get a close look, you see crisp, precise work and a beautiful design.

Once the external thread was to size, the hex stock was chucked, bored out to the proper ID, and the internal thread was cut. There was no measuring, as I used the knurled piece to determine when I was finished cutting the internal thread. The two pieces mate together remarkably well; today, my engineering judgment says the pitch diameters are about 0.001 inches apart -- the nut turns freely on the thread but with almost no play. People who pick it up are surprised by its smooth operation and close tolerance. They're even more surprised when I tell them they were made with nothing more than a caliper and rule -- and I was only 12 or 13 years old when I made it.

I keep this brass first project in my tool chest as a reminder of those wonderful few hours spent with my grandfather. I dearly wish I had gotten more time for such projects, but I never did (he died about 7 years later). I'm still using his lathe.

A key lesson I got from this was that you can do a surprising amount of machine work with old-style calipers and a rule (old-time machinists knew this well).

I've passed on my grandfather's teaching a number of times to various folks who were interested in machining, as it's an excellent first lathe project.

Frying pan fix

My wife has a favorite old frying pan. Unfortunately, manufacturers use crappy cheap plated steel screws to hold the handle to the pan body. These screws will <u>always</u> rust after a few years and freeze in the hole, especially if you wash the pan in the dishwasher. If you try to take the handle off, the screw breaks off in the hole or the head strips. Always.

If you have a new or relatively new frying pan, take off the handle and put some anti-seize lubricant on those screw threads. Today. Then, make a point of checking and renewing the lubricant periodically. This will let you keep the handle tight and not have to deal with a broken screw. Better, replace the screw with a stainless steel one with a socket head or Torx head (and don't forget the antiseize lubricant).

When you do have a broken screw, your only choice is probably to drill it out (if you have access to a machine shop, you might be able to remove it with EDM -- or an aluminum pan might let you try nitric acid to dissolve the steel screw and leave the aluminum mostly alone).

Removing the screw is pretty straightforward -- just center punch it and drill out the screw with the tap drill size. The only important part of center punching is to center on the hole, not the threads, as what you will be able to see of the threads may throw the center off.

The challenge I ran into was how to hold the pan for drilling. Here's the scheme I came up with:

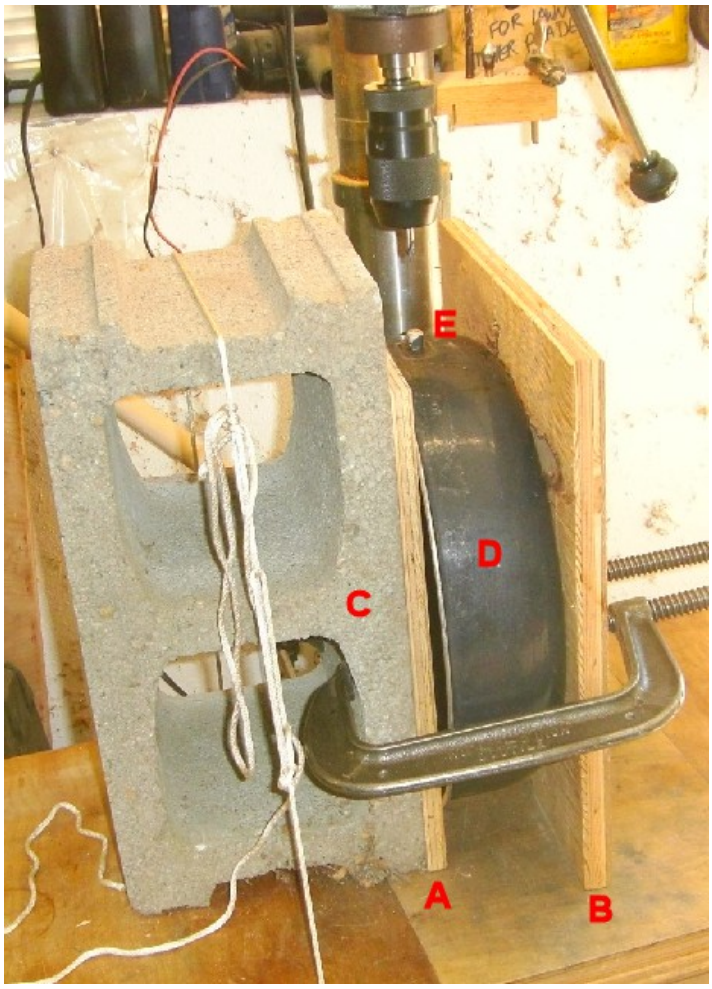

I tied a cinder block C tightly to the drill press table (that's 1/8" braided nylon cord with a versatackle) and clamped the pan D between two chunks of plywood, A and B. Part B had a vee cut in it at the bottom to let me see a vertical pencil line splitting part A in half. I used this line to make sure I was drilling the pan vertically. The broken screw was in boss E, which was a chunk of aluminum welded to the pan.

The drilling went forward with no problems and I put a new properly-lubricated stainless steel socket head cap screw in place of the old screw. I also installed a flat washer and a star lock washer to help keep things tight. I don't expect to see this frying pan again in my shop.

Plumb bob holder

Here's a holder I use for my plumb bob's string; it's made from a scrap chunk of 1/4" plywood (I've also made some from 1/8" thick white acrylic sheet):

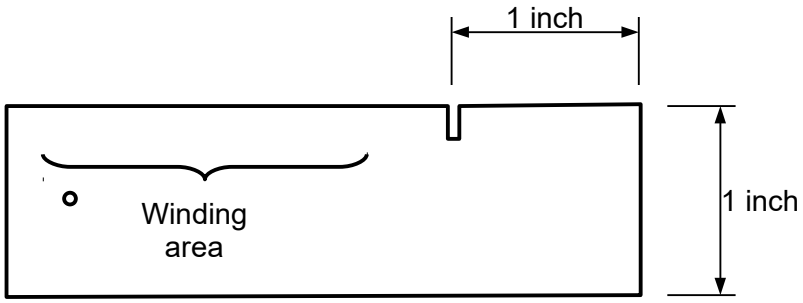

I put the string through the hole and tied a knot to keep it from pulling through. Then I wind the

string over the indicated winding area and pull the string tight in the notch, which is cut with a hacksaw and traps the string. This lets me store the plumb bob without the string getting tangled. It took less than a minute to make. I recently made a new plumb bob and used a piece of 1/8" thick acrylic plastic scrap to make another holder. I used a thin #6 nylon fishing net twine, so I cut the slot with a thin blade in a coping saw. This also worked well.

To use, unroll the amount of string you need and clamp it off in the notch. The 1 inch distance is handy, as you can use it as a spacer to hold the string a known distance away from a surface. For example, to check that a door jamb is plumb, press the holder to the top of the jam and measure the string distance from the jamb at various points. If it's not 1 inch, then the jam is not plumb.

I've read that some folks use an old tape measure to store the string for their plumb bobs. Tie the string onto the end of the spiral spring and let it retract into the case. Whittle an end to stick into the tape measure so the bob's string is guided by a hole.

Getting some braided nylon string through a small hole can be a challenge when you want the string to be a tight fit in the hole. One technique is to use some piano wire and make a small hook (like a button hook) to pull the string through the hole. Or, melt the end with a lighter or match, then quickly roll it with something flat to make it a pointed, round end (like the aglet on a shoelace).

Button hook

Button hooks were used to pull buttons through a button hole (a century and more ago this was common task for women's shoes). Some basic designs are:

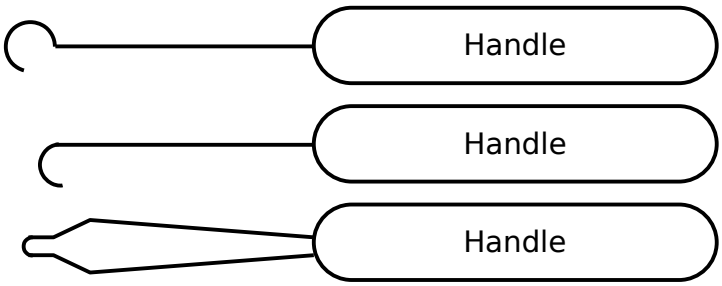

You can still buy them today, but any shop bird will make one from some piano or stainless steel wire. My most-used one is a chunk of stainless steel wire bent into a semicircular hook like the middle diagram and the handle is made with a right angle bend in the remaining wire. It takes a few seconds to make (excluding the handle) and will find a number of uses.

Finding nails

I have some 15 mm diameter by 20 mm long neodymium magnets I salvaged. They make simple detectors for finishing nails in wood, such as in a door's trim. Run the magnet along the wood and it will be obvious from the feel when you run across a steel nail, even countersunk ones below the surface.

In September of 2016, I had the feed rollers from my Makita planer recovered, as the original polyurethane rubber had cracked/degraded and Makita no longer sells replacement rollers. While waiting for the rollers to come back, I was thinking of some of the projects I would make when the planer was working again (it had been sitting unused for a number of years; my wife was the one who egged me on to get it fixed, as we have numerous home DIY projects that could benefit from using some of the scrap wood we have on-hand).

My biggest worry about using scrap wood was feeding a board with a nail in it through the planer or jointer -- this puts a ding in the cutter edges and takes a bunch of time to fix. Thus, I was trying to think of a way of detecting these nails -- without spending any money if possible. A quick web search showed commercial tools from $20 to $200 or so, but objective evaluations and comparisons were hard to find. What I did find wasn't terribly encouraging.

Thus, I was thinking I'd have to scan each board with this 20 mm diameter magnet I have. I wasn't looking forward to this tedious work, as I would have to scan both sides of the board and the edges and this would be slow.

To help me evaluate the effectiveness of the magnet method, I made a "calibrated nail standard" by cutting four different nail diameters off to 20 mm length and putting them into a 2x4 a measured distance below the surface. Then it was easy to rub the magnet over the nail locations and see which ones I could feel.

I showed this tool to my wife and she understood the need immediately. She asked me if I wanted to use her metal detector. I said, "**WHAT METAL DETECTOR?!**" She had one in a closet she bought years ago for when we went camping with our youngest daughter, but it never got used. She said she paid about $10 for it at a second hand store.

I stuck new batteries in it and tried it out -- it worked far better than the magnet. The key test was when I put a 1 mm diameter brad 20 mm long on the back side of a 2x4. The detector was able to find this brad. The 200 mm diameter head makes it easy to quickly scan a board -- and I only need to scan one side for boards up to the thickness of a 2x4.

This metal detector is obviously a low-end model, yet it works great. There's no manufacturer name on it; all it says is "Metal Treasure Detector". It's apparently still made and you can find them new for around $50.

I'm also going to use the detector to find a few of our sprinklers that get buried in the grass every year -- it takes time to find them so I can blow out the sprinkler lines (these sprinklers have valves next to them that need to be closed). I'll bury two metal rods (e.g., rebar) at right angles about 50 mm below the surface. I verified from testing that I can locate the intersection point to less than 25 mm, so this will make it quick and easy to find the sprinklers.

You can use this buried metal rod method to provide benchmarks in your yard. This is handy for surveying purposes -- you can find the benchmarks years later when e.g. a wooden stake would be long gone. Surveyors often pound in a chunk of rebar to mark property corners, so a metal detector is useful to find those too.

Chair repair

I bought an oak dining room table set in the early 1980's and it has stood up pretty well to the attacks of kids, grandkids, and family get-togethers. But the main chair I sit in is the chair that gets the most use and abuse. A granddaughter was in it the other day and my wife heard something go pop. My granddaughter was quite upset thinking she may have broken the chair, but it wasn't her fault, as the chair was broken before.

A decade or so ago I had put some 3" Torx screws in the back to better hold the back legs to the frame, as the manufacturer's screws had loosened. On inspection, one of the 3" screws had stripped out, leading to movement on that chair leg. The "pop" was due to the two dowels that hold the side rail on that side breaking.

I knew this would be a challenging repair because the chairs are made from a hard furniture-grade oak and nothing is at a right angle (the legs are angled at about 30° to the seat boards, one of the rails is curved and the other meets it at a non-right angle). I put the chair upside down on the table and looked at it over the period of a few days while my wife and I discussed various repair techniques (she would have made a great mechanical engineer). I told her I thought it could be one of the most challenging repair tasks I've ever undertaken. This was because the dowels holding the back legs on did not have parallel axes: the dowels holding the rail on one side didn't have their axes parallel to the dowels holding the other rail. Thus, to drill out the old dowel holes and install new dowels would require completely disassembling the chair. This would have been a lot of work and drilling out the old dowels and installing new ones without having things move slightly would be challenging.

The two broken dowels could be replaced by either nails or screws to provide the required shear

strength for the rails. The problem with nails is that some other force needs to pull the joint together; the advantage of screws is that they can provide this pulling force. The disadvantage of the screws is that they would be going into end grain. This can be dealt with by gluing in a dowel with some cross grain, but that was extra work. Instead, I decided to use a long screw to have lots of holding power in the end grain. This was good oak and I felt a long screw should hold OK.

I decided to use some 4 inch long Torx drive bugle-head screws I have. Since I have a lathe, I turned the outside diameter of the screw head down to 0.3 inches, which let me use a 5/16" drill to start the hole. I plugged this hole up later so the screw head couldn't be seen.

The challenge was to drill a 4 inch long hole as a pilot hole for the drill. The root diameter of the screws was around 0.14 inches. I luckily had a 0.16" diameter aircraft drill bit that was 4.5 inches long. I carefully marked out the locations of the other screws and where the drill needed to go, then had my wife eyeball the side orientation while I looked down from the top over the drill and bit. It turned out to be an anticlimax to drill the holes and install the screws (it only took a couple of minutes). The screws pulled the joints together nicely. In addition, the corner brace screws were also replaced with these 4 inch screws; I had to machine some countersunk washers to correct for the resulting depth, but this was straightforward lathe work. Best of all, everything tightened up perfectly when assembled and we knew the chair was as good or maybe even stronger than it was when new.

I had a chunk of 3/8" oak dowel, so I made some rounded end plugs that are a tight press fit into the 5/16" holes (hand drilling resulted in oversize holes, which meant I had to machine the plug's OD to 0.326 inches). I rounded the ends off with a file, sanded them, dipped them in a honey oak stain, and just pressed them into the holes with no glue.

This was a very satisfying repair because we evaluated 4 or 5 different ways to make the repair, each with varying advantages and disadvantages. The method chosen turned out to be easy to do and is probably the strongest possible repair without completely disassembling the chair and repairing the dowel joints. It also demonstrated the advantage of evaluating a variety of techniques over a reasonable period of time, then selecting the best technique.

Tweezers

In the 1970's, I worked at companies that made high vacuum sputtering equipment sold to semiconductor fabs and when I visited customers in their clean rooms, they were invariably using Dumont tweezers to handle things. Thus, I bought myself a few pairs of Dumont #3 INOX tweezers (the INOX means they're a type of stainless steel; they can also be had in a carbon steel). These are Swiss-made tweezers with fine tips. I use them for one thing only: removing splinters. There is no better tool for this task than using a good sharp pair of tweezers like this. They work well on both metal and wood splinters. Once you've tried them, you'll never want to use any other kind of tweezers. My wife feels the same way and has her own pair. Depending on the style, you'll pay around $20-$30 for a pair.

I also use a 4X jeweler's loupe to help with splinter removal; those of you with older eyes will understand why.

Update: in the 70's and 80's, Dumont was the only manufacturer I knew of that provided these tweezers. Today (2015), there are a number of different providers and you can find suitable tweezers in other brands, often much cheaper than Dumont.

Spray paint cans

It's pretty aggravating to get out a spray paint can and try to paint something, only to find that some idiot didn't clear the nozzle last time the can was used and the paint won't spray (it's even more aggravating to realize that idiot was you). Before throwing the can of paint out, there are some things you can try.

Pull the spray nozzle off and soak it in some acetone (assuming it's an alkyd paint). This might loosen the clog so that it will spray out. If not, keep a spray bottle of "I Can't Believe It's Not Butter"

filled with acetone (the bottle is polyethylene, so it will stand up to the acetone OK -- I have one in my shop that I've used with acetone for over 20 years). Put the tip of the paint can nozzle against the hole in the butter spray and try to spray acetone through the paint nozzle. If you're lucky, you should see some acetone spray out of the nozzle. Now you should be able to put the nozzle back on the paint can and have it spray again. I've had paint cans where I had to do this 5 or 6 times before I could get reliable paint flow. Or, use an eyedropper, disposable pipette, eye syringe, or some other suitable device (I have an old ground-glass B&D syringe from the 1950's that's nice for holding acetone). Another good container is one that held contact solution; you can use it to provide slightly pressurized acetone to the paint can tip (wear safety glasses in case it sprays).

Of course, you know the old dodge when you're finished spraying: turn the can upside down and spray until only gas comes out. This clears the nozzle and suction tube of paint and you won't have the nozzle clogged the next time you use it. Wipe excess paint off around the nozzle hole too.

I just used this tip on a few old spray cans I had in the back of one of my cabinets and they both cleaned up fine and worked well. These were paint cans I bought nearly 40 years ago (and they still work just fine).

When you throw away an empty spray paint can that doesn't have a clogged tip, remove the tip and store it in a drawer marked "tips". You may be able to use it later on another spray can whose nozzle you can't clear.

Frank Ford has a similar tip; he recommends cleaning the can's tip out with solvent after each use. This is a bit more work, but probably means you get to use the whole can of paint.

Can caps

Spray can caps that require a screwdriver to remove are annoying -- you shouldn't have to go find a tool to use a spray can. They're probably made this way to prevent young kids from using the paint.

Still, this annoyance is easy to fix: get some diagonal cutters and snip a 5 mm long cut in the inner cylinder of the cap. Now you'll be able to remove that cap with only your hands -- just like the good old days. I can't remember for sure, but I think this is one of Frank Ford's tips too.

Check your drill press table

Bend a piece of coat hanger wire into a Z shape, chuck it in your drill press, and sweep the table to see how flat the table is with respect to the spindle (this is an old tip and not original with me). Obviously, you can do this on your vertical milling machine too.

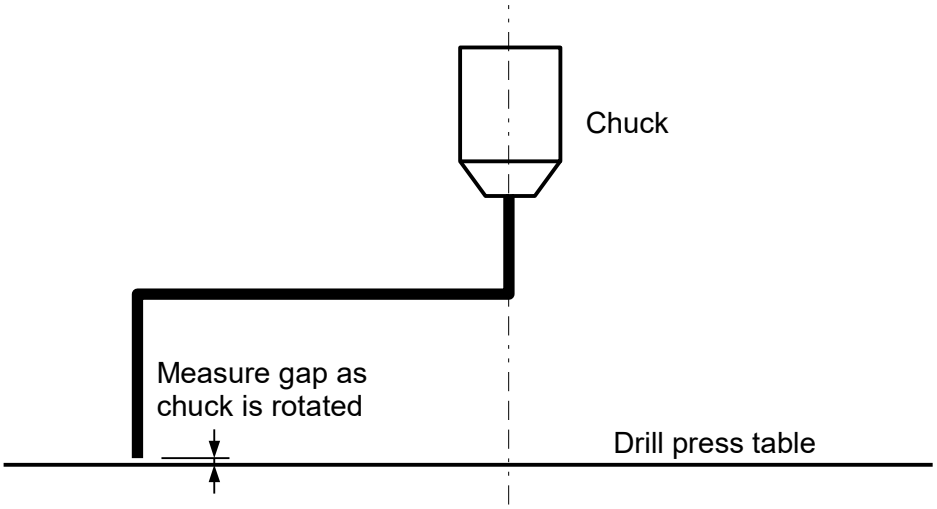

A non-flat or tilted table will result in non-perpendicular holes being drilled. One fix is to build an auxiliary table and shim it appropriately. I've used a drill press table that was in a Woodsmith issue (an index I have shows it was probably in issues 54, 68, 76, 152, or 171. I've been using this table for decades and love the design.

Two nails for turning wood

If you have a metal lathe, you can turn wood with it too. One of the challenges is how to hold the wood piece. One way is to use a spur center; this works fairly well, but requires a special tool. My brother and I were working on a project in his shop where we needed to turn some 2 inch diameter wooden plugs and he didn't have a spur center. This holding/driving method appeared to me in a flash. It's topologically equivalent to the old method of a lathe dog, but only required a couple of nails.

Cut the heads off the nails. Put one of the nails in the chuck and center it if it's a 4-jaw (nail 1). Pound the other nail (nail 2) into the end of the workpiece at a suitable radius; this second nail is the driving nail and will make contact with the chuck's jaws. Try to have the wood flush against the jaws to minimize the bending torque on the pounded-in nail; this will let you take deeper cuts.

Mark the center of the workpiece. Jam the workpiece onto the chucked nail 1 (you only need to

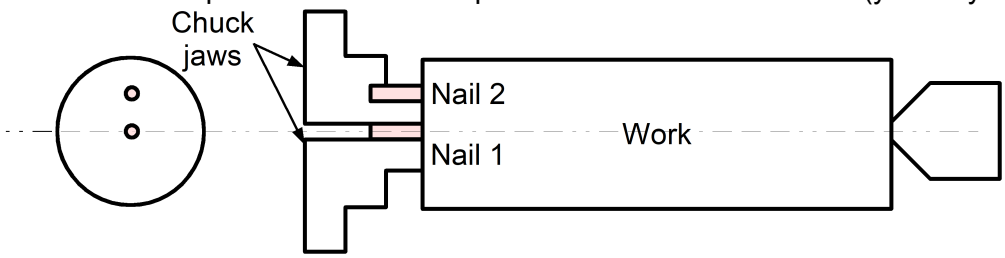

expose a short section) and use the tailstock to drive a center (live center preferred) into the other end. Now you can start taking light cuts on the wood.

My brother and I were surprised by how well this worked and we had no complaints about the cost of tooling. In fact, my brother used a sharpened dental pick in the chuck instead of a nail and it worked just as well. He was able to turn the wood to within a few thousandths of an inch on the diameter for a press fit into a chunk of PVC pipe; this was on an old South Bend lathe that came around the Horn with Magellan.

Hermaphrodite calipers

These are also called jenny or odd-leg calipers (technically a misnomer, as "odd-leg calipers" meant something else in the early 1900's) and are used to scribe a line a distance x from an edge (picture from here):

Scribing a center mark on a round workpiece with these calipers involves setting x to about the radius of the workpiece. Then you scribe four arcs from about 90° positions around the edge:

Then you eyeball the location of the center by splitting the horizontal and vertical distances. You'll

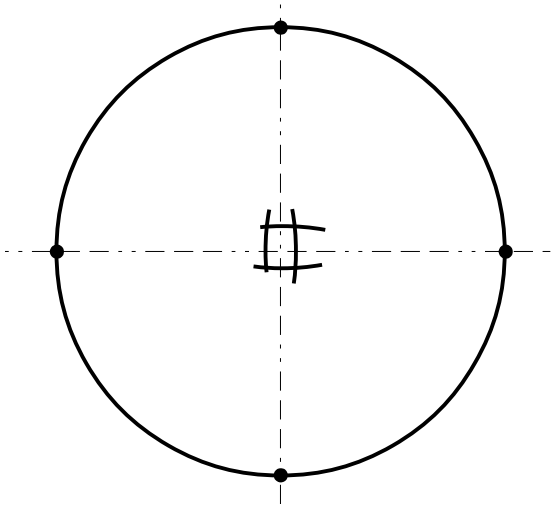

find through some experimentation that your brain is good at halving small distances by eye.

On smaller stock, you'll find you move the caliper's leg on the outside of the stock, producing a pattern such as:

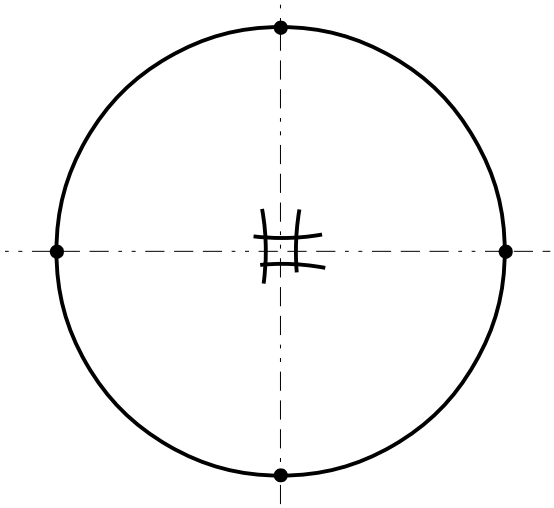

You still find the geometrical center in the same fashion.

A slight modification finds the geometrical center on rectangular stock too:

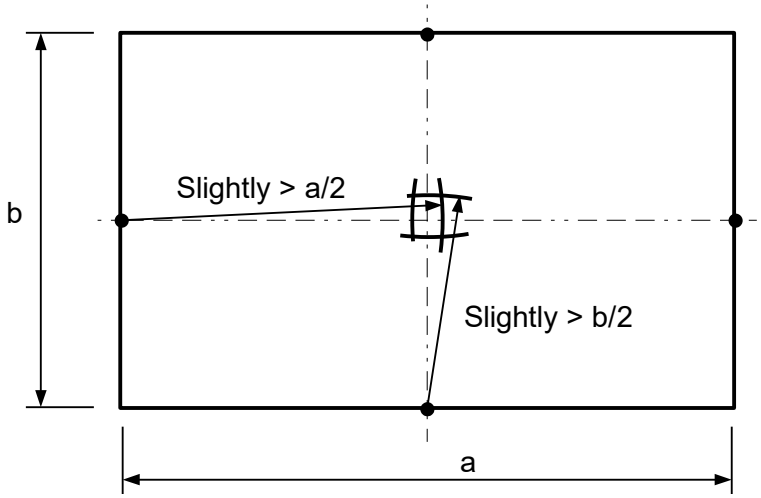

You'll find that it's not difficult to locate a center on a metal workpiece to within about 0.005 inches (around 0.1 mm). I use a sharp prick punch for this along with a magnifying lens to locate the punch. Things may be a bit sloppier in wood because of the varying density due to the grain.

I like this technique because it's fast and doesn't require a fancy tool. I use my hermaphrodite calipers around the shop for a number of different tasks and I consider them a mandatory shop tool. They solve the basic task of scribing a line from an edge or shoulder.

I have an old Lufkin pair of firm joint hermaphrodite calipers. They are nearly identical to the Starrett 563-6 calipers. I use them the most, but also use some old-style Starrett model 42 calipers with the rectangular leg (the new design uses a pin like the Lufkin design); these old-style Starrett calipers will scribe small distances from a shoulder that the pin design can't -- and they are a bit beefier to let you push the calipers' point into some wood, obviating the need for a punch.

One of the advantages of the pin design is that you can vary the depth of the point quite a bit to suit different tasks. For example, you make the curved leg substantially lower than the point when scribing a line parallel to an edge with a significant chamfer or radius. You can also make an auxiliary caliper leg and turn the hermaphrodite calipers into inside/outside firm joint calipers.

For occasional homeowner use, find a good drafting compass at a garage sale and make a bent leg from some 1/8" welding rod and some filing. It works and costs little.

Filing fixture for bench vise

Here's a filing fixture that occurred to me one day when I was thinking about how to make some angle gauges. I wanted to file some sheet metal pieces flat. Here's the basic idea, identical in concept to filing buttons:

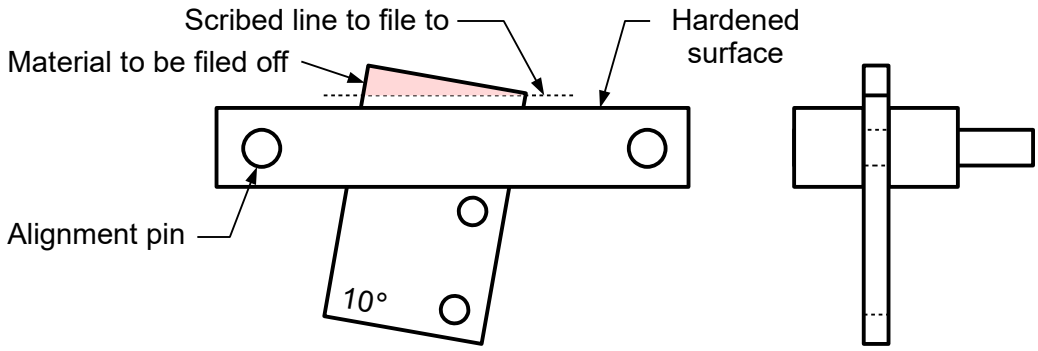

The file will skate on the hardened surface and the material will be filed off flush to the surface. The pins keep the fixture's pieces aligned and allow you to clamp the two pieces in a vise. The same

principle can be used to e.g. build a fixture in wood to file larger workpieces.

I modified this design to the following:

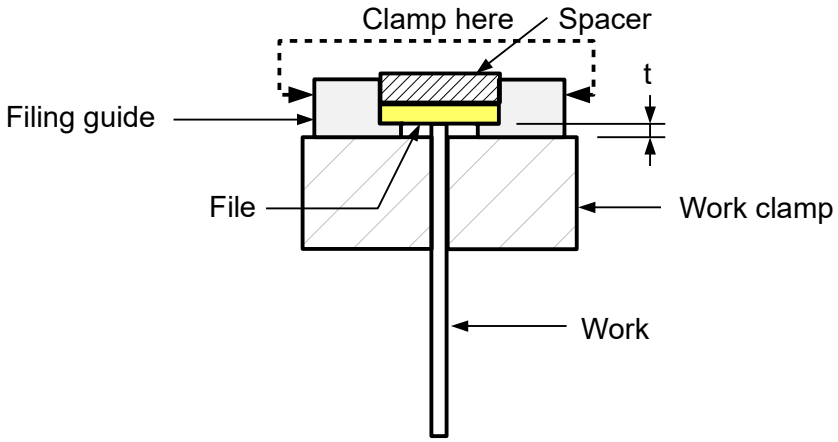

The filing guides glide along the work clamp surfaces, holding the file spaced a constant distance from the top of the work clamp. A nice feature is that both the filing guide and the work clamp can be made from softer materials like aluminum or brass. I've also indicated that you can clamp the guides to the file using e.g. a machinist's clamp to make the assembly easier to use.

Critique: This can work, but you need a spacer as showed by the hatched piece to keep the filing guides from collapsing. A better design would use two pins to keep things aligned:

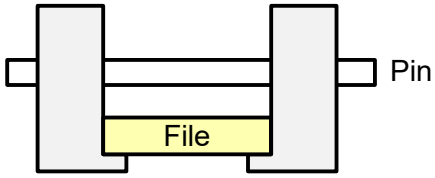

The pin keeps the parts together and a machinist's clamp can be used to hold things together or a single bolt could be used.

An advantage of this approach is that none of the fabricated pieces need to be hardened.

You may have seen a filing guide for the lathe which uses a pair of rollers attached to the tool post. This allows you to e.g. file a square or hexagon on some work while it's held in the chuck:

A similar idea could also be used in a stand-alone filing fixture. The rollers are hardened to avoid getting dinged up by the file. A practical solution would be to use two sealed ball bearings of suitable diameter and width.

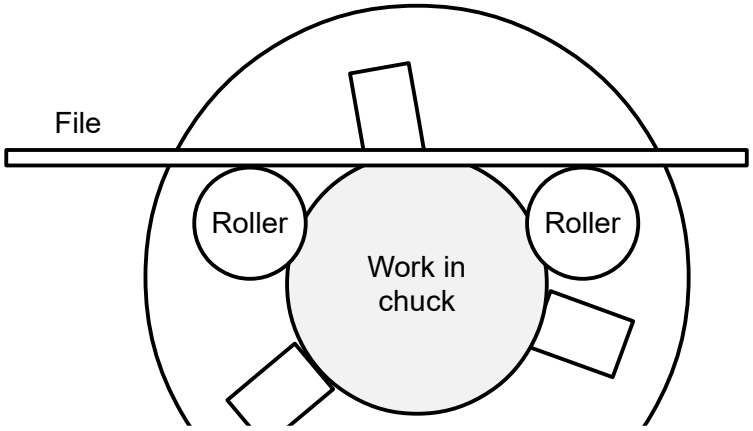

Christmas tree stand

My wife wanted a temporary Christmas tree holder for a memorial tree in a public location. The artificial Christmas tree was based on a 1.39" diameter dowel E that held the limbs. I used a base of four cinder blocks A clamped together with two sheets of 1/2" plywood C. Two 3/8 threaded rods D with nuts clamped the assembly together.

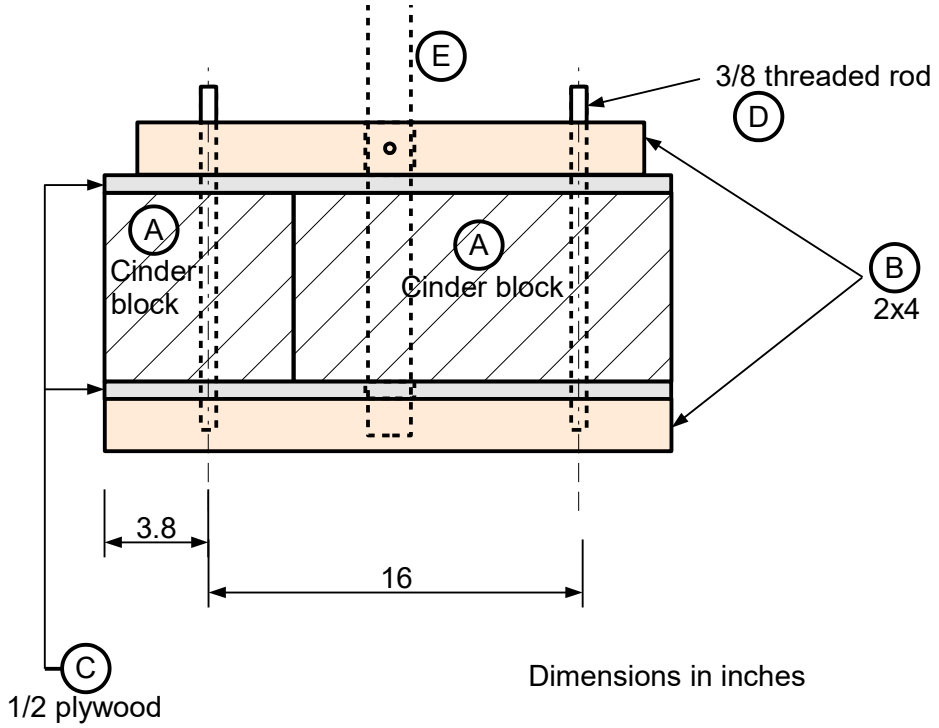

The bottom is supported by two lengths of 2x4 (this also allows wrench access to tighten the 3/8 nut on top (side view of above sketch):

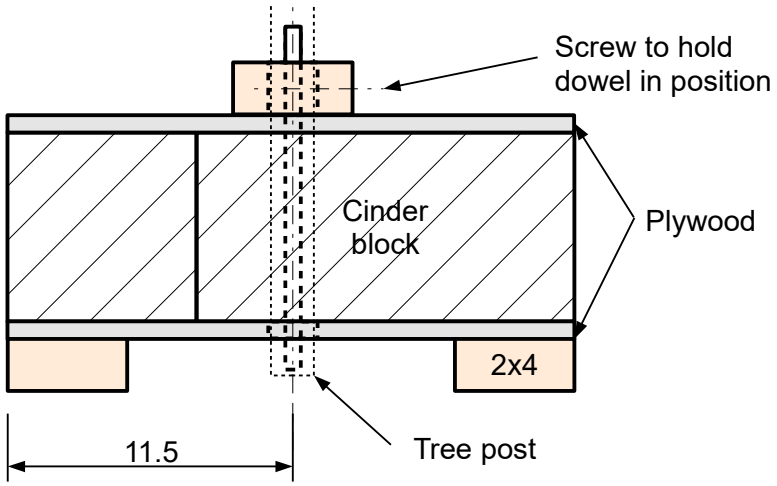

Since a cinder block weighs about 35 lbs, the assembly weighs over 140 lbs. We only needed this stand for about a month, so I didn't bother securing the two cinder blocks that didn't have a 3/8" rod through them (they can theoretically be pulled out sideways).

The Christmas tree rod is tapered on the bottom; a 1" diameter hole in the bottom plywood will have the taper extend about 1" below the surface, which is less than the thickness of the 2x4. It turned out that the tree's dowel fit a 1-1/4" steel pipe nicely, so I drilled holes in the plywood to pass the OD

of this piece of pipe. Later, my wife changed the tree she wanted to use; it had a 1.25" diameter dowel, so I had to make some spacers to take up the slack (I bored and turned them from a 1" PVC pipe threaded union).

Here's the drawing for the plywood:

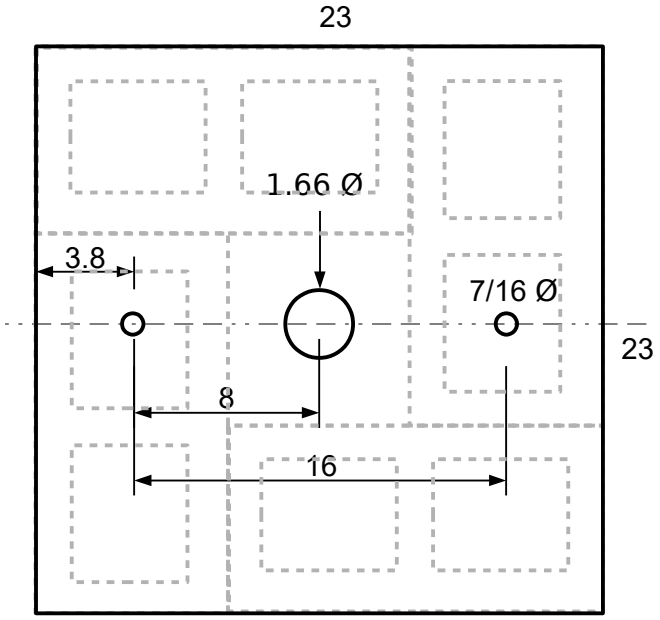

Dimensions in inches

Here's the 2x4 drawing:

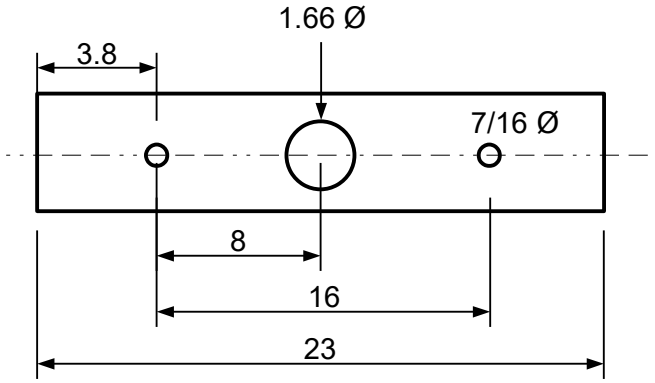

Dimensions in inches

I had to use an old expansion bit from the brace-and-bit era to cut the oddball-size hole. I had cut off the tapered square shank of the bit and filed three flats on the shank to allow me to chuck it in an electric drill. I used my 1/2" Milwaukee drill with a handle to drill the holes. I used slow speeds, as drilling larger holes with such a bit can apply lots of torque to your hands/arms quickly if something catches (it's especially enjoyable if you have arthritis in your wrist or elbow). It's best to drill a small pilot hole (say, about 0.08 inches in diameter) through the plywood and drill half-way through, turn the plywood over and drill through in the other direction. Or, clamp the plywood to a piece of scrap wood to avoid the tearing/breakout when the drill comes through the end of the hole. A better tool for this job is an old man (drilling crow), but I was too lazy to get mine out.

Once things were assembled, it's was a surprisingly rigid base. I was originally going to put a screw or bolt in the 2x4 on the top to clamp the pipe in position, but the holes fit closely enough that I just

pushed the top piece of plywood sideways a bit and tightened the 3/8" nuts. This clamped the pipe in place and it couldn't easily be removed.

We installed the tree and put a red plastic cover over the whole base. It sat outside in the snow and rain for about a month or so and worked quite well.

Ladder from 2x4s

When my youngest daughter was little, we built her a tree house; it was really a 4'x8' sheet of 3/4" plywood that was screwed to some central dead main branches of a tree that I had to cut out (I also added some handrails). I supported the extremities by using wire and turnbuckles so the tree could grow. Kids and grandkids have been playing in this tree house for decades; I finally disassembled it in 2019 because of rotted wood, tree growth, and kids hadn't played in it for a number of years.

The ladder into the tree house is steep at about 70° (this was dictated by lawn mowing requirements). It's constructed from 2x4 material. The ladder sides had dadoes cut into them about 6-7 mm deep and the two sides are pulled together using 1/4-20 threaded rod, washers, and nylon lock nuts (rods were used at the top, middle, and bottom rungs). It's still rock-solid after decades of use. Each step is held in position with a single 3 inch long screw.

You want to cut the grooves in the 2x4s at the same time, so gang them together and make a simple fixture to constrain the movement of the cutting device (hand saw, circular saw, router, etc.). I can't remember exactly how I did it, but I believe I just marked the cuts out with a pencil and the protractor attachment to my combination square and cut them with the circular saw and chiseled them out (I could have made a simple guide to clamp onto the boards to limit the saw movement; a router would work with this fixture too). After the grooves are cut, you can trim the ends at the desired angle. The legs are mirror images of each other. Here's the cutting pattern I used:

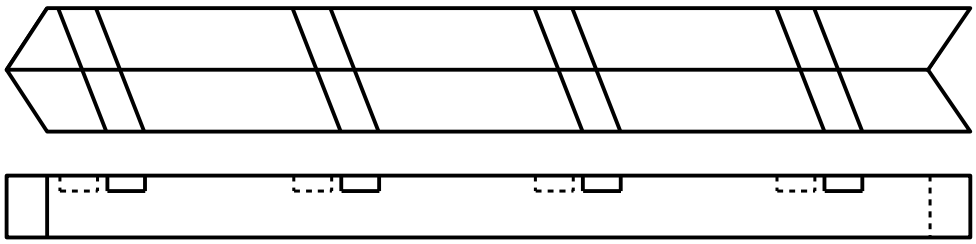

I tied the ladder to the tree with a length of 1/8 braided nylon, using a versatackle for leverage. This has been surprisingly sturdy and the tree can grow (no nails or screws were put into the tree to hold the ladder). This string broke a couple of decades after being installed; it held the ladder surprisingly rigid all those years. It was a few minutes of work to replace it.

Where I used wire rope and turnbuckles to hold the tree house parts, I put them inside rubber fuel hose to minimize the damage to the tree. Alas, the tree just grew around these attachments, so the wires are now inside the tree.

Bench joint

A few decades ago I built a shop bench that has worked well for me to replace one I built in 1970 (I can date it exactly, as I was visiting my parents and built it from some scrap from the new house they had just built). It used a solid-core door (one that was blemished and sold for scrap) as a top with 4x4 legs and 2x6 stringers. Here's the construction method for the legs; it takes a bit of time to make, but it's strong and lets you disassemble the bench later if desired.

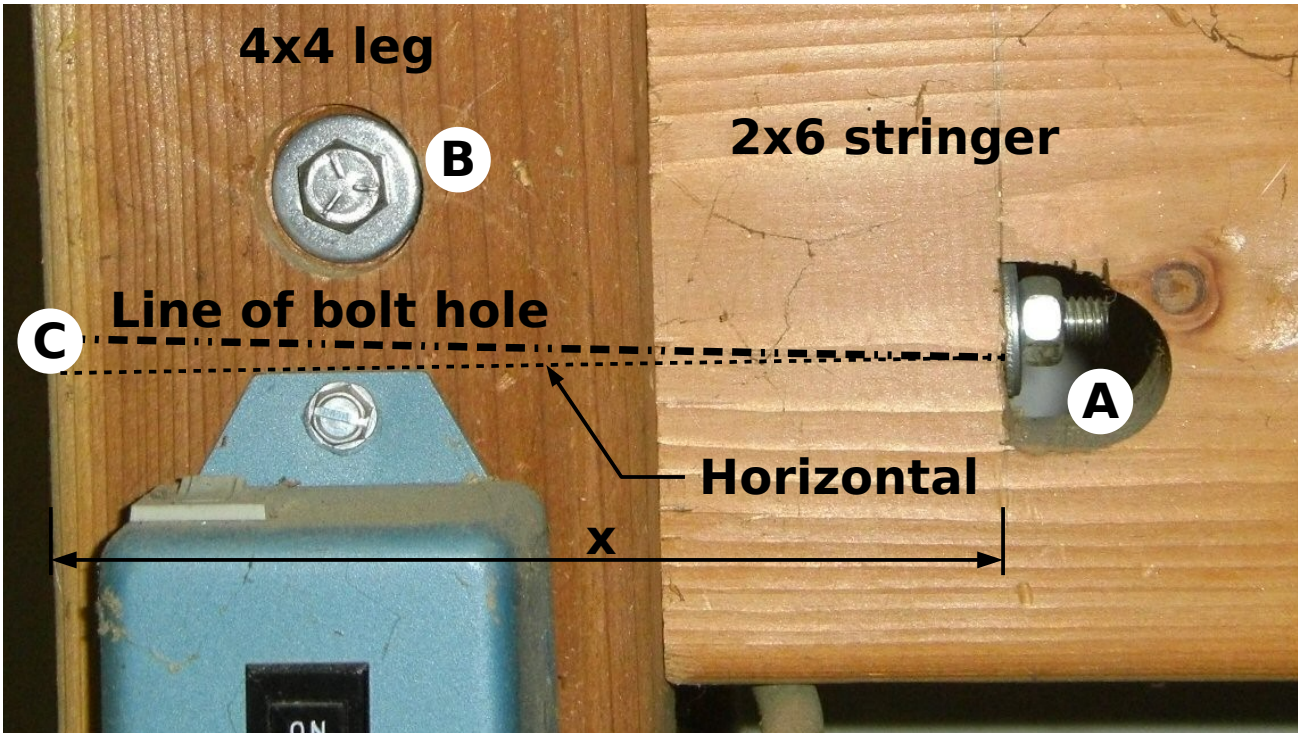

Each leg-to-stringer joint is held together with one bolt, two flat washers, and a nut. Note the heads of the bolts are countersunk into leg to keep the bolt head below the surface (this lesson came from repeatedly barking my knuckles on the previous workbench where I left the bolt heads on the surface).

The bolts are 6 inch long 5/16-18 UNC. The key part of the construction is to drill the holes at A so that they intersect the center of the bolt's axis. Since I drilled these holes with a hand-held electric drill, I knew I should mark the location of the holes A **after** drilling the long holes for the bolts. Here's how I did it.

Since there are two bolts, B and C, note you need to offset their locations slightly so they don't intersect.

I first clamped the two legs and stringer together with ropes or strap clamps in the position I wanted them to be. I used some short dowel pins between the legs and stringers to keep them aligned (these dowels also help with the joint's shear strength). Make a simple drilling jig from a piece of scrap steel to help you drill the two dowel pin holes per leg/stringer joint.

I first drilled the countersink for the bolt head with a Forstner bit. Then I drilled the long bolt hole, aligning things by eye (I used a 12" long brad point bit). Looking down from the top of the bench, it's important to intersect the center of the stringer, but it doesn't matter if the hole isn't quite horizontal. In fact, the hole in the picture is noticeably not horizontal. I located the hole A by leaving the drill bit in the hole after drilling and using a straightedge to mark the path of the drill. This was done by sighting from the side (if I hadn't added the dashed lines to the picture, you'd still be able to see the pencil alignment mark I made). A pencil mark was made at the correct distance ***x*** (allowing for the countersunk bolt head). The hole A was drilled with a Forstner bit and the flat clamping surface was cut with a chisel and saw.

These joints are very strong after tightening, but can be disassembled later. The construction can be done with hand tools if needed, although drilling the holes goes more quickly with an electric drill.

Formed lathe toolbits

Sometimes you want to have a formed toolbit to cut a special shape on your lathe, but it could be difficult or lots of work to grind a high speed steel bit to the required form. For example, suppose you wanted a toolbit of the following profile to cut a convex bead:

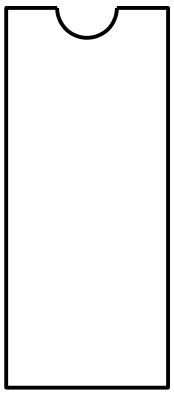

This could take a fair bit of grinding to put into a high speed steel toolbit and you'd have to have a grinding wheel of the correct diameter in e.g. a Dremel tool to cut the radius or dress a grinding wheel to the needed radius.

An alternative is to make the formed tool from a chunk of annealed tool steel and harden it. If you've never done this, it's not as hard as it may sound -- you just need a propane torch to heat up small tools (bigger parts take more propane torches or an oxy-acetylene torch). You can use milling machines, lathes, grinders, and files to shape the toolbit to the desired shape, then harden and temper it. You sharpen it by stoning it after hardening and tempering.

One tip is to use Allen wrenches, as they are usually made from a tough steel that can be shaped and hardened fairly well (certainly enough for one-off work). You can machine the Allen wrench on a lathe to a round form to make it easier to hold or, if you have an Aloris-style toolpost, make an adapter that can hold hex stock to let you hold an L-shaped Allen wrench as a boring bar:

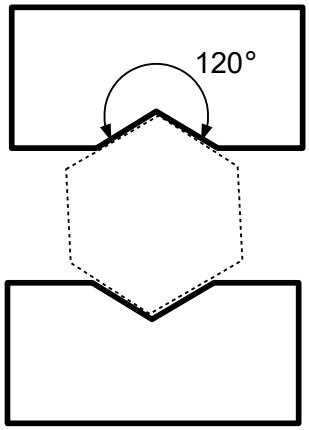

If you cut off the Allen wrench's bend, you can clamp the remaining chunk as if it was a square toolbit. Small Allen wrenches can make impromptu boring bars for small work.

Instead of making the above adapter, it may be easier to just file or grind flats on the existing Allen wrench to hold it as a boring bar:

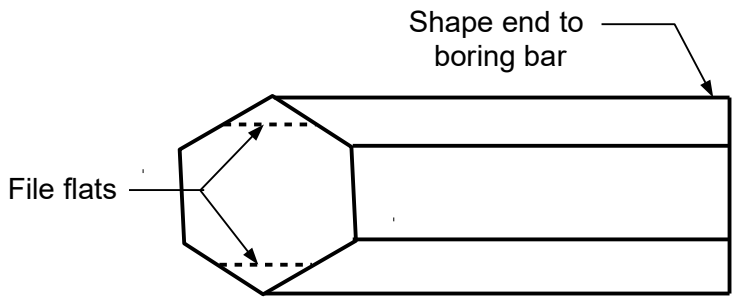

To harden the Allen wrench, use a propane torch to heat the end to a cherry red color and hold it at this color for a few seconds. Then plunge it into room-temperature water or oil (oil is probably preferred because it won't cool the steel as quickly). I often use the cutting tool as-hardened without tempering, but you can temper it if you wish to make it softer but less likely to crack or fracture.

Sharpening

For much of my routine shop sharpening, I like to use a Norton Crystolon "stone" (silicon carbide made in an electric furnace). The size is 1x2x8 inches and Norton's part number is 85455-1; it's called a combination bench stone because it has two grits, coarse (100 grit) and fine (280 grit). I use this stone for all routine shop sharpening tasks. In fact, I also use it to sharpen my utility 3/4" wood chisel, which I use for DIY projects around the house. This sharpening is adequate for most projects. I'll finish sharpening my woodworking chisels on some Japanese waterstones, as they do give a finer edge.

The advantage of this Norton stone is that it sharpens things quickly. It cost $15 when I bought it (there's still a price tag on the box); it appears to be around $20-$25 now. I use it for things such as gasket scrapers, cold chisels, axes, yard equipment, shop cutting tools, 3-corner scrapers, etc.

The initial sharpening is done with a bench grinder, hand grinder, or file. I keep an old contact wetting solution bottle (made from polypropylene) filled with mineral oil and use this to squirt some oil onto the stone. I sharpen the item by spreading around the oil and trying to use most of the stone's surface to even out the wear. When the oil becomes a heavy slurry of particles, I'll wipe the stone off with a paper towel, add more oil, and continue.

I also have a Norton combination India stone (aluminum oxide abrasive) which is used for finer sharpening (medium is about 240 grit, fine is about 400 grit).

In the US, the grit size is the reciprocal of the mean grit diameter in inches.

These two Norton stones will cost you under $50. Frankly, they'll do 95% of the sharpening tasks in the shop. A 400 grit India stone will sharpen a chisel or plane blade most of the way you need it. Sure, honing on finer stones and stropping make sharper blades and wonderful cutting, but folks did a lot of work for centuries without these finer grades.

These stones can also be used to sharpen knives. For quick results, make a wedge from some wood; use 15° for very sharp knives that won't hold their edge for very long, 20° for general-purpose blades, and 25° for blades that will get a lot of abuse and must stay sharp for extended periods of time. Use the wedge on the stone to help you align the knife blade at the correct angle, then slide the blade's edge along the stone, holding the angle constant. Count the number of strokes and do the same on the opposite side. Feel for a continuous burr on the opposite edge to tell you when you've sharpened with that grit enough. For general shop tools and knives, I rarely go beyond 400 grit sharpening.

Reversible utility knife blades

Utility knife blades are cheap, so change blades often. I use a blue Sharpie marker to mark an X on one side of a new blade. **I always install a new blade with the blue X towards the rear of the knife**. This lets me know when both edges have been used -- if I see the blue X, then the blade can

be rotated when the other end is dull.

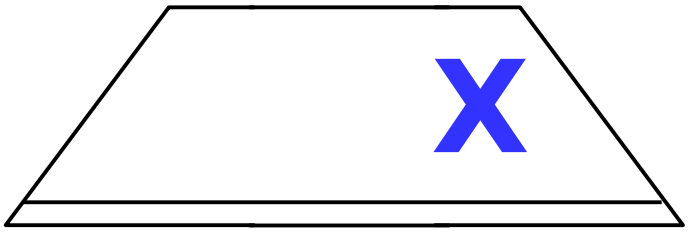

If you have the time, these blades can be resharpened pretty easily and thus reused, as long as you don't let them get too dinged up. I also will sometimes sharpen the new blades, as they aren't as sharp as they can be.

This sharpening is done on a fixture that has two embedded neodymium magnets to hold the blade. Then a diamond "stone" is held at a constant angle and rubbed over the blade edge. I can sharpen up a bunch of blades in a few minutes.

Update 2017: Lee Valley Tools sells some serrated utility knife blades that work well for cutting things like carpet and cardboard. The blades cost around 70 cents each (about 7 times more than typical utility knife blades), but they will last longer (I've used up a few of them already). Also check Amazon, as they sell a pack of carbide-tipped blades (I haven't tried them; they tripled in price over about a year or two).

I have a number of beat-up Stanley utility knives that store blades in the handle. Sometimes these can sit for years without getting used -- then the spare blades in the handle can stick together or rust. To avoid this, put Vaseline on your fingers and lightly rub the Vaseline on the blades before storing them.

Comments on working in a car

This section contains some lessons I've learned in working on cars. I didn't work on cars when I was a kid because I didn't have one until I was in college; then it was usually tune-ups and emergency maintenance (I didn't have anyone to teach me, so I had to learn by experimentation).

Take pictures and notes: With today's digital cameras, there's no excuse to not take pictures/videos at various points of disassembly. You'll find those pictures can be quite useful (essential, actually) when you go to put things back together. **You think you'll remember everything, but you won't**. I keep a sheet of paper labeled "Important things to remember on reassembly" and make notes and sketches when I see some non-obvious thing that I want to be sure to remember when I'm putting everything back together. Error on the side of conservatism, as what is obvious to you when disassembling won't be weeks or months later when you reassemble (delays are almost inevitable and your short-term memory quickly fades).

> On nearly every car project I've worked on, it takes longer to do than I anticipated. For example, you plan to have some heads machined, but then find out the heads are cracked, you need to locate another set at a junkyard, and have to deal with a long waiting list at the head repair shop. My wife and I had this happen when replacing the head gaskets on her van -- and it took over a month to get the heads back. The pictures and notes were invaluable when I had to put things back together.

Yes, this note-taking consumes extra time -- but it's probably less than a reassembly mistake or forgetting something important.

I also make a list of the subassemblies I work on, the wrench/socket sizes needed, bolt lengths, and any pertinent observations. This list then becomes the reassembly instructions when read in reverse order. Bolt/nut sizes are always given in the wrench/socket size, not the major diameter of the screw so that I can quickly select the proper socket or wrench.

In recent years, I've learned about the utility of a 1/4 inch hex impact driver -- so much so, I won't work on a car without one now. My Dewalt brushless unit has a switch for three speeds. The lowest lets you tighten small screws without fear of shearing them off. The highest is stated as providing

about 120 ft-lb of torque, which will loosen most fasteners. You need impact-duty rated adapters, as this driver will shear off the cheap ones in a flash. I've coupled this impact driver with 3/8 inch square drive deep 6 point impact sockets -- and my set of 6-19 mm deep sockets handles most things I come across (I also have a 10-19 mm deep flex socket set). I liked this Dewalt impact driver so much that I bought a 1/2" square drive brushless impact driver too -- and it has loosening torque stated to be over 1000 ft-lb. A local store was selling them at $160 without a battery and it was too good of a deal to pass up. I don't use it very often, but when you need it, you'll be thankful you have it.

Digital inspection camera: For looking in cramped quarters, you may want to get a digital inspection camera; there are numerous models available on the market. My wife and I found ours was mandatory to find a coolant leak after the engine was assembled (an old o-ring I failed to replace), as it was in a place impossible to see with the naked eye. The $75 Harbor Freight 61839 camera worked well for this task.

Replacement box: I use a cardboard box to hold any parts taken out of the car that have to be replaced. Then it's obvious what needs to be purchased at the next visit to the auto parts store (and the part to be replaced can be taken along to assure a match).

Replace bolts/nuts: One of the simplest but most important things you can do is to replace the nuts and bolts that you remove into their holes or onto their studs. Then they are ready to be reused when you're ready to put that subassembly back together -- and you know which bolt goes into what hole. If I see multiple bolts of different lengths, I'll measure their length and hex head size and make a sketch showing which bolt goes where. This requires extra up-front time, but can save you time at reassembly because you don't have to experiment and figure it out. If the bolt fits in a through-hole, I'll secure it in the hole with a tie wrap around the threads as a temporary nut.

Check your library: Our city library has a car repair database that is fairly good (provided by Ebsco). You can look up specific sections of the car or engine and get an idea of what needs to be done for a repair. The documentation is not great, but it's better than not having any information.

Label/bag: When parts are removed, they get put into a plastic bag when they're from an assembly. For example, the exhaust manifold nuts and studs will go into a plastic bag. I cut up an index card and write on a piece describing what's in the bag. Our eternal optimism makes us assume we'll remember these things later, but it just doesn't happen. What usually happens is some unforeseen event delays the reassembly significantly; then later you're faced with some loose parts that you have no clue what they're for. **A bag and label gets rid of this problem**. I also use small cardboard labels with cotton strings (get them at an office supply store) and various types of adhesive labels. A good substitute is a roll of white or light-colored vinyl electrical tape; fold over the end to make a little tab that makes it easier to remove when you're done with it and write on it with a Sharpie felt pen. For us do-it-yourselfers, if you don't do this labeling, you will waste a lot of time at assembly figuring out how things go back together and possibly make a mistake or forget something.

Remove the radiator: when working on the front of an engine, modern cars provide little room and visibility. For the cars I've worked on, I've found it's usually not an onerous task to remove the radiator and/or the fan shroud to provide better access and visibility. For example, we used a Toyota pickup borrowed from a nephew while I worked on my wife's van and I had to replace the three vee belts in the pickup. Draining the radiator was straightforward, as was removing the two radiator hoses (get or make a radiator hose pick if you don't have one). Then most cars' radiators can be removed by removing a few bolts. Even if you have to leave e.g. an air conditioning radiator or transmission oil cooler in the car, you'll still have more room to work. When replacing radiator hoses, I smear a little waterproof silicone grease on the fitting and the inside of the hose, as this makes things easier to take apart later. I'll also often replace the OEM hose clamps with worm-drive hose clamps. Most of the time I can remove those OEM hose clamps with Channellock pliers or linesman's pliers, but they can be aggravating in close quarters. Cable-type hose clamp pliers are a good investment for such clamps.

Exhaust bolts: the nuts, bolts, and studs on exhaust manifolds run at high temperatures and their coatings will quickly fail, so these parts are always rusted. They can be difficult to remove. For example, I was unable to break the 13 mm nuts loose holding the tailpipe onto the exhaust manifold on my wife's van, even with a 1/2" breaker bar (I had little clearance under the car while laying on my back and my arthritis and bad shoulders didn't help). I switched to an electric impact wrench and it popped the nuts right off. An impact wrench is useful for such exhaust stuff, but be cautious using one on smaller stuff, as it's easy to break bolts and studs. It still might break trying to loosen it with a breaker bar, but you'll be able to provide torque more carefully. It often helps to put a penetrant[1] on things before trying to disassemble rusted fasteners; let the penetrant soak as long as you can (overnight if possible). I reassemble exhaust system fasteners with an antiseize compound. In fact, I almost always put antiseize compound on all screw threads to make them easier to take apart later (torque them to about 2/3 of the spec since they are lubricated).

Think like an engineer: When removing the heads from my wife's van (the head gasket blew out), I had to remove many things to get access. As I had no documentation that showed me the location of bolts and their number, I had to figure things out on my own. The basic principle I could count on was that each device was supported by a minimum of two bolts and more if there could be significant loads on it. For example, the air conditioning bracket had five hefty bolts holding it on as well as a close-fitting pin on one of the head bolts. This bracket held the heavy air conditioner compressor and also the two top motor mounts, so it needed to be beefy and well-supported. You'll also find bolts you can't easily see at first because the assembly won't come loose, so you know there has to be another fastener.

Be careful cleaning things: Find out approved methods for cleaning things. For example, the machinist at the machine shop I took our van's heads to said to only clean the aluminum heads with a plastic scraper and use a sharp single-edge razor blade to scrape the cast iron block. Don't use things like Scotch-Brite, which can put abrasive particles where you don't want them (e.g., in the cylinders) as well as round off corners that should be sharp. Also be careful around plastics and seals with aromatic organic solvents.

Use the right sockets: I prefer six point sockets over 12 point sockets. The main reason is that you're less likely to damage a hex head with the 6 point socket. I recently saw an example of this where I accidentally used a 12 point socket on a 10 mm hex head bolt in an exhaust system and the socket immediately rounded off the head and didn't budge the bolt. I switched to a 6 point socket and it was able to remove the rounded bolt. 12 point sockets are occasionally useful when you're in cramped quarters and can't turn things very far, but not for fasteners that need maximum torque. Once you've dinged up a hex head, you may need to find some special hardened and shaped sockets that are used to get dinged-up bolts out (if there's room, some Vise-Grip pliers can be used). Today, 99% of the work I do on a car is with deep 6-point impact sockets.

Have a variety of wrenches: Combination wrenches are my favorite general-purpose wrench. I like to have the standard long size, a shorty size, and a very short size. All are useful at times. I've come to like the combination wrenches with ratcheting box ends that pivot on a pin -- these wrenches can service fasteners that other wrenches can't service (I consider the flat ratcheting wrenches that don't pivot to be knuckle-busters and won't buy them). It's nice if the ratchet has a switch on it to reverse direction (Sears used to sell wrenches like this), but this isn't mandatory because you just flip the wrench over. I bought a set of ratcheting pin-end wrenches from Harbor Freight for $25 in metric: 10, 12, 13, 14, and 15 mm. I'm pleased with the purchase (Sears wanted to sell me one wrench for about that price and it would have taken a week to get). The wrenches I use by far the most are 7/16-1/2 inch, 1/2-9/16 inch, and 10-12 mm short offset box wrenches from Snap-On. These wrenches slip easily into a pocket and are thus handy when working on things.

Impact for tough bolts: Unless you're a professional mechanic or a weekend-warrior pressed for time, you don't absolutely need an air or electric impact wrench. If you don't have one, however, make sure you get yourself a manual impact wrench, the type that you hit with a hammer. Also get

1 A good one is a 50:50 mix of automatic transmission fluid and acetone.

impact sockets and various screwdriver bits rated for impact duty. These things will loosen fasteners that other tools won't touch.

Impact wrench: There are lots of choices. I've had a Rockwell electric impact wrench (1/2 square drive) and it has worked well for 40+ years. I've got a few air tools, but my favorite impact tool is a Dewalt brushless 1/4" hex impact wrench with 3 torque settings. I also got the Dewalt brushless 1/2" square drive impact wrench for stubborn stuff. These cordless tools are so convenient. Recently, my son and I removed an engine and transmission in a junk yard and they were absolutely necessary to do this task in a reasonable amount of time.

Get a long breaker bar: You can get a 25 inch long 1/2 inch square drive breaker bar from Harbor Freight for around $13. Such tools are needed for breaking heavily-torqued bolts and nuts loose (the cordless impact wrenches are better though). When working on my wife's van, my old 1/2 electric impact wrench wouldn't break the head bolts loose, so I had to use one of these long breaker bars and it still took quite a bit of force to loosen them.

Use youtube: It would be nice to be able to afford the fancy mechanic's documentation, but I can't justify it because I only work on cars occasionally. However, you can find useful videos on youtube if you type in the correct search terms. You have to put up with many poor videos and ones that are made by amateurs that know nothing about editing (also some videos give you incorrect information and you may not know this). However, grumble not -- look at a number of such videos and select the ones that appear to be the best. There are also a number of other useful web resources on car-related stuff, so your first task should be to search the web. Also consult your library -- my local library has a free database on car maintenance information. It's not great, but it's better than nothing.

When I find a good video, I watch it through and make notes on each step of the procedure. I also write down the time location in the video clip for when I want to watch it again. You'll find this viewing and note-taking to be very valuable to getting the job done effectively.

Use antiseize: One of the biggest bummers in working on a car is a frozen or broken fastener. After you've dealt with them, you'll not want to have to do it again if you can help it -- you can waste a lot of time fixing such problems. Buy a can of antiseize compound and put a small dab on each bolt and nut when they are reassembled (carefully read the manufacturer's service information, as there are places where you shouldn't use such compounds, such as head bolts, intake manifolds, and lug nuts). I've been using the same can of Permatex antiseize compound for nearly 40 years (you only use a small amount for each part) and it has saved my bacon countless times when I have had to take things apart again later. The only bolts I've had break off since I started using this stuff are those that never had any in the first place.

However, be careful with antiseize compound, as it is also a lubricant -- **bolts and nuts will require lower torque values to get the desired stress in fasteners**. A guideline is to use 1/2 to 2/3 the recommended torque if you use antiseize compound. This requires engineering judgment and you're responsible for the results. I always put antiseize on my vehicle's and trailers tire studs, but I have to let tire shop mechanics about this and ask them to torque the lug nuts to 2/3 the normal value.

Talk to the pros: When replacing the head gaskets in my wife's van (a challenging repair job because of all the stuff that had to be removed first), we took the heads to a local machine shop that specialized in heads. I asked the folks at the local auto parts store for the name of a high-quality local machine shop and a customer at the other counter recommended I call the auto shop that had rebuilt his engine the year before, as he was very happy and knew they did a good job. The owner (James) of this auto shop was polite and very helpful, even though I told him up-front that I wasn't going to result in any business for him (but it did a few years later). He told me he only used one machine shop in the city and to call Scott, one of the owners of this machine shop. Scott turned out to be a valuable source of information and we asked him to machine the heads I removed. He told me the heads I removed were cracked, so we got another set from a junkyard from a car with 100 kmiles on it; Scott machined the heads and did a valve job. **Our total cost was still less than**

remanufactured heads from the local auto parts store -- and I found a knowledgeable and helpful pro at the same time. I've since made James' auto shop the place where we take our cars for repair, so James' time spent on the phone was a good investment for him (but he's just a plain nice guy, which is probably why he did it in the first place).

The place my wife and I used to take our vehicles for work had grown to be pretty large and jacked their prices up quite a bit. They wanted $3300 to rebuild the heads in my wife's van. My wife and I were short on cash at the time, so we decided to do the work ourselves. Though it took a lot of work to do this, we got a running vehicle for a total cost of around $1300, including a few specialized tools that I had to buy.

Work board

We replaced a carpeted floor in the bathroom with vinyl tile and vinyl base molding. A 20 inch square chunk of scrap 3/8" plywood was quite useful as a cutting board. When it was on the bathroom counter it sat on a towel to avoid scratching the counter. When in the hallway outside the bathroom, it just sat on the rug. My favorite tool for scribing and cutting things is a steel carpenter's square because it has a reasonable weight and I don't worry about the utility knife dinging up the edge.

For larger pieces, I used a 24" x 48" plastic mat used with rotary sewing cutters for fabric and worked on the dining room table. I had to put cardboard under what I was cutting to avoid having the utility knife score the plastic mat.

Plywood wheels

I will sometimes replace broken wheels with ones made from plywood. For example, we had a lawn mower that had hard rubber tires on a spoked plastic wheel rim. The wheel rim was poorly designed and didn't stand up to years of use. Both wheels broke and at $35 each, their replacement would cost more than the mower was worth (a friend who moved back east gave me the mower). A plywood wheel suited the application and let me get a few more years of use from the mower until the engine wore out (it was a cheap piece of junk, actually).

When the first wheel broke, I used two 3/4" plywood pieces to form the following structure to use the existing rubber wheel:

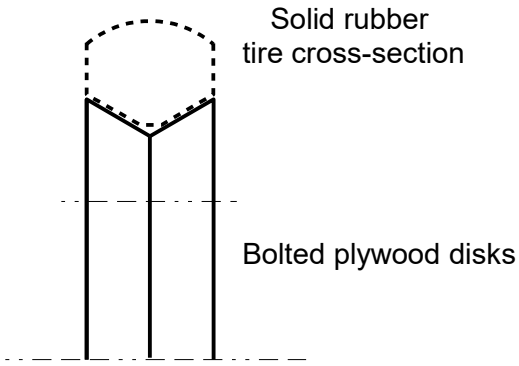

I had to make a fixture to use the table saw to cut the bevel on each disk and it was a fair bit of work, but it let me use the existing solid rubber tire. When the disks were bolted together, the tire was held in position.

When the other plastic rim failed a year later, I made a simpler tire from three pieces of 0.7 inch thick plywood; the resulting thickness was 2.17 inches, exactly what was needed to replace the existing plastic rim's dimensions. The other tire needed a washer to adapt the thickness, as things had to fit a shoulder bolt that holds the tire on.

The second tire was made from three 14 inch squares cut from a sheet with a circular saw. The method of construction made things relatively simple to make; the only other power tools I used were a portable electric drill and a band saw. Here's a description of what I did.

I first marked the centers of each of the squares and put a prick punch mark at each center. Using the center on one square, I laid out the required circle to cut the wheel to size (13.68 inches in diameter). Using the circle's radius, I laid out the radius on the circumference to divide the circumference in 6 equal parts. Through three of the marks, spaced 120°, I marked bolt holes on a 12 inch diameter circle. The other three marks got bolt hole marks on a 5 inch diameter circle.

I drilled a 0.099 inch diameter (#39, 2.5 mm) hole through the center of each square and pounded in a 0.098 inch diameter nail to hold the three squares concentrically. I lined the squares' edges up, then drove in a 3 inch long Torx wood screw at a radius of about 5 inches to keep the squares from rotating with respect to each other.

At each of the marked holes for the bolts, I drilled a 0.099 inch diameter pilot hole through the three boards. I then drilled a 17/64 hole about halfway through from both sides; these are the clearance holes for the 1/4 inch flat head bolts that will hold the disks together.

I used an 82° countersink to countersink the drilled clearance holes. Then I bolted the disks together with six 1/4-20 bolts 3 inches long. On each bolt, I used a brass washer, a stainless toothed lockwasher, and a stainless steel nut.

After tightening the bolts, the assembly was taken to the bandsaw and the wheel was cut out to the scribed circle. A shoe rasp was used to smooth things off and round the corners. I tried to cut close to the marked line, but perfection isn't required because the wheel will be rolling over rough lawn (you'll hear/feel the imperfections when you roll the lawn mower on concrete, but it doesn't affect functionality).

The final step was to bore a 1-1/8 inch diameter hole 0.35 inches deep on both sides at the center. These holes hold the flanged wheel bearings.

After mounting the wheel, it had excessive wobble; I traced the cause to the 1-1/8" holes drilled on both sides not being concentric. I replaced one of the boards with a 6 inch diameter piece and aligned it by first boring the 1-1/8" hole, aligning this bored hole with the other matching hole, then drilling the three clearance holes for the 1/4 flat head screws. This worked well with minimal wobble.

The excess bolt lengths were cut off with a hack saw and the assembled wheel then got a coat of polyurethane.

Turning with carbide inserts

In 1995 I bought a set of triangular carbide insert holders from Harbor Freight for $27. These were insert holders with 1/2" shanks. I don't see that set for sale anymore, but I'm assuming the part number 39931 for $25 is a similar set with 1/4" shanks. I typically have only gotten these toolbits out when I want to turn tough materials like a ferocious stainless steel or a hardened steel like a tap, a HSS tool, or an engine valve.

Lately I've been leaving the straight tool in one of my my Aloris-style tool holders and using it for general turning. One thing I hadn't realized is that it is also good for facing, so I can do turning and facing with one tool; here's a plan view of the concept:

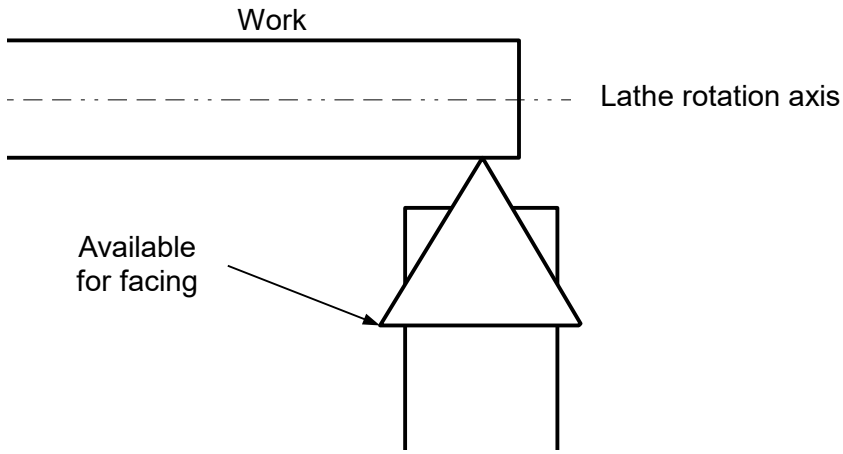

The side-protruding tip is available for facing the end of the work and lets you work a little more quickly because there's no tool change. I feel a bit silly for not noting this feature before.

Checking a lathe's level

I mentioned to my brother that he should check his lathe's level, as I had not checked my lathe's level in a number of years and found it was out a bit. I use a six inch Starrett #98 level, but he doesn't have one. Instead, he found a recommendation on the web to use a plumb bob. It's a practical tool for checking the lathe's level:

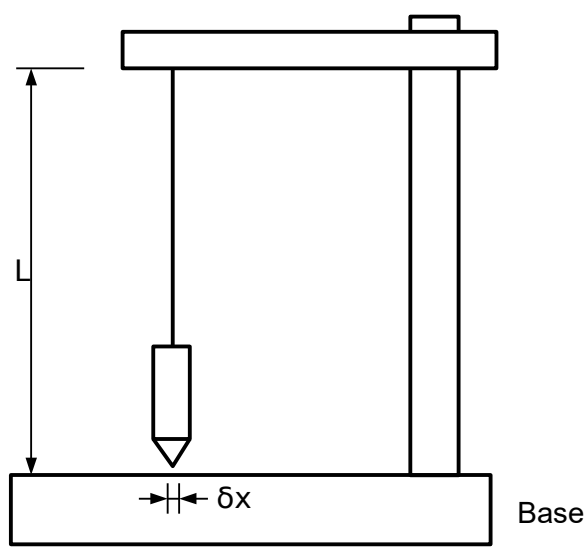

He made his from some scrap and a plumb bob that's some simple lathe work.

Let's look at the sensitivity of this method. Assume you can detect a minimum movement δ*x* for a plumb bob length of L. The angle of tilt in radians is

$$\theta \approx \frac{\delta x}{L}$$

This is because δ*x* will be small with respect to *L* and the tangent of a small angle in radians is the same as the angle.

My brother built his plumb bob with *L* = 42 inches. Let's assume you can measure a minimum δx of 0.01 inches. Then the sensitivity is 238 µradians.

Compare this to my Starrett #98 level, which has a measured sensitivity of 0.015° per division or 262 µradians per vial division. The practical resolution of this Starrett level is about 1/4th of a division.

Thus, we see the plumb bob method is practical and may be all you need (I've found that the Starrett #98 level is a bit too sensitive and usually only worry about getting the lathe level to within one or two divisions).

You can see that if you wanted the plumb bob to be as sensitive as the Starrett level, you'd need to increase the length by a factor of 4, but that's a bit over 4 meters, not a practical shop tool.

Another benefit of making sure the lathe bed is level is that you then have a handy reference surface in your shop. Of course, you don't use the ways as an anvil, but you might want to machine a flat plate that can sit across the ways and be a handy level reference.

Lathe tune-up

I have a 12 inch Clausing lathe made around 1960 that is reliable and dependable. I moved it to its current location in my shop nearly 30 years ago. I was reviewing the owner's manual for it and it reminded me I should check the lathe's level, as it has been a number of years since I've done that.

I used my Starrett 6 inch #98 machinist's level and was a bit embarrassed to find that the lathe was a number of divisions out of level. It only took a few minutes to re-establish level. For those of you who may not have a manual, here's a copy of the instructions for my lathe (note it is [sic]):

> The lathe should be kept perfectly level at all times. When carelessly mounted, the bed may become twisted. Even a slight amount of twist will move centers out of alignment and result in inaccurate work and excessive wear. Make it a habit to regularly check the level of the bed.
>
> Use *one* precision level at least 6 inches long -- level should show a distinct bubble movement when a 0.003 inch shim is placed under one end.
>
> > *[I'll insert in-line comments in this font]. The Starrett #98 6-inch level shows a bubble movement of 2 divisions for a 0.003 inch shim, so it's more sensitive than needed.*
>
> Clean the bed ways thoroughly.
>
> 1. First level bed longitudinally, compensate for variations of bubble readings by turning the leveling screws on the cabinet until the bed is level -- refer to figure for level positions.
>
> > *I haven't copied the figure, but it's easy to explain. The two cross-level checks are made at the headstock and near the tailstock when the tailstock is at its most-open position (sitting on the bed perpendicular to the rotation axis). The longitudinal check is parallel to the rotation axis and on the bed on the surface the carriage rides on.*
>
> 2. Next level both ends of the bed. The headstock and tailstock -- must be checked with the level placed at right angles to the bed. Refer to figure. Use a square to align the level. *Do not turn level end for end*.
>
> Level reading at headstock and tailstock must be identical. Compensate for variations of bubble readings by turning the leveling screws until the lathe is level.
>
> NOTE: Avoid excessive adjustments of leveling screws by inserting shims between the pads and the floor.
>
> 3. Tighten the four anchoring bolts *not more than* finger-tight, or until the lock washers start to compress -- lag screws should be tightened, the backed off about one-quarter turn.
>
> 4. Recheck the level of the lathe -- unequal tightening of anchoring bolts may have pulled the bed out of level. Recheck leveling in 5 days.
>
> Check level of bed at frequent intervals. Chatter -- turning taper -- boring taper -- facing convex or concave is the general result of an improperly leveled lathe.

These manufacturer's instructions assume you'll install anchors in the concrete or wood floor where the lathe is situated. My lathe is on concrete, but I've never installed anchors.

After setting and checking the lathe's level, I installed a test bar with center holes in each end between the lathe's centers and drove it with a dog. I made this bar originally from a piece of 1.5 inch brass propeller shaft. It is kept in a wooden box and is only used for checking the lathe. This

bar is shaped as follows:

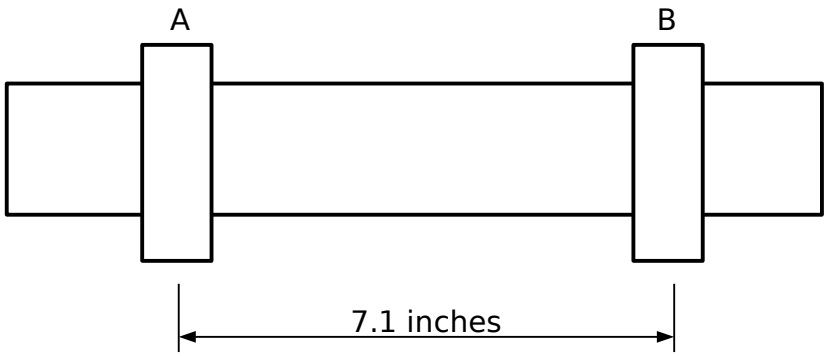

Note: this tool is used between centers and is used to accurately set the tailstock center to be aligned with the lathe's rotation axis.

The toolbit is kissed to the OD at B and that section is turned down slightly using the feed. The carriage is traversed to A without changing the crossfeed and section A is turned down under feed. The resulting diameters are measured and, after leveling, it is assumed that any difference is due to the tailstock being set over slightly.

Since I know the set screws clamping the tailstock in position are 5/16-18, I can correct for the offset. For example, if diameter B is smaller than diameter A, then the tailstock is in front of the lathe's centerline and needs to be moved backwards. Here's an example of the measurements I made and how the lathe was dialed in (measurements in inches):

First measurements: A = 1.3218, B = 1.3166, A - B = 0.0052. I thus needed to move the tailstock half this distance or about 0.0025 inches towards the rear of the lathe. The pitch of the set screw is 1/18 = 0.0556. Since 0.0025/0.0556 is 0.0450, the reciprocal of this tells me I need to turn about 1/20th of a turn of the set screw.

Second measurements: A = 1.3146, B = 1.3123, A - B = 0.0023. Need to move about 0.0012 inches. This is such a small movement, I just loosened the rear set screw as little as I could, then tightened the front set screw.

Third measurements: A = 1.3109, B = 1.3100, A - B = 0.0009. Since this is less than 1 mil over 7 inches, I deemed it better than I typically need, so I stopped.

You can also measure the tailstock movement with a dial indicator, which will probably get you to centered in fewer steps because you know how much things need to be moved and can measure the movement.

I gave the lathe a good cleaning and lubricated everything. I also topped off the oil levels in the headstock and apron assembly, as the indicators showed the levels were about 1 mm low. About 35 years ago I bought a gallon of a hydraulic oil with wear additives per the recommendations of a local lubrication company as a replacement for the obsolete oil specified in the manual. In those 35 years, I've only had to add oil twice to the lathe, a testament to good seal design.

Checking the lathe's level: A further turning test is to machine a short test bar that is <u>unsupported</u> by the tailstock; cut two collars 2 to 4 inches apart. Take a light final cut (less than 0.002" or so) and measure the collar diameters. **If they differ, the lathe isn't level**. (From South Bend Bulletin H-3 dated 1942).

Turning a #33 Jacobs taper

I wanted to make a mount for a Jacobs chuck for my lathe. The chuck has a female #33 Jacobs taper and I wanted this chuck to have a straight 1 inch diameter shank so I can grab it in a collet and use it as a small 3-jaw chuck. Thus, I needed to turn the following piece (dimensions in inches are from *Machinery's Handbook*):

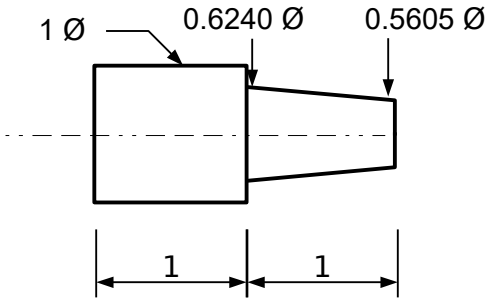

I tried making this using a tailstock set over, but the setting is complicated by the rather high angle of taper and problems with grabbing things in a chuck -- the 4-jaw has to grab the piece at an angle and it's not hard to spin the piece in the jaws, ruining the work.

I could have grabbed the part with a lathe dog and driven the dog with one of the chuck jaws. Instead, this piece really demands to be made by setting over the compound rest at the proper angle, which is

$$\tan^{-1}\left(\frac{0.6240-0.5605}{2}\right) = 1.82\,°$$

I set the compound to this angle, then fine-tuned the setting by following a dial indicator's change while traversing the bar stock with 1 inch of travel with the longitudinal feed. In fact, my first setting was within 0.5 mils of what it should be, so I left it alone and cut the taper. It fit the chuck nearly perfectly. However, coating the newly-turned aluminum with a blue marker, pushing the chuck on the taper, and turning it showed me that the chuck was only making line contact at a few points along the taper. It demonstrated that my chuck's tapering socket needs to be reamed or bored to clean it up.

> I chose not to mess with trying to fix the chuck's socket, as the chuck is 50-100 years old (I got it from my grandfather who died in 1970). The turned taper fits pretty tightly onto the chuck anyway (I can't pull it out by hand), so I'll use it as-is.
>
> **This turned out to be a good decision**, as after I finished the tapered adapter, I pounded it into the chuck with one hit from a dead blow hammer (back the jaws into the body and set the chuck's nose on a block of steel, then hit the adapter with a soft hammer to drive it in). Then I put it into the 1" collet and checked the runout of a piece of 1/2" drill rod: the total runout was 0.00012 inches measured with a tenths indicator (yes, a tenth of a mil), about 20 to 30 times better than I expected.

By the way, if you make such a chuck adapter, be sure to provide some clearance for later putting a wedge (e.g., chuck wedges, screwdriver, ball joint separator, etc.) to be able to remove the adapter from the chuck:

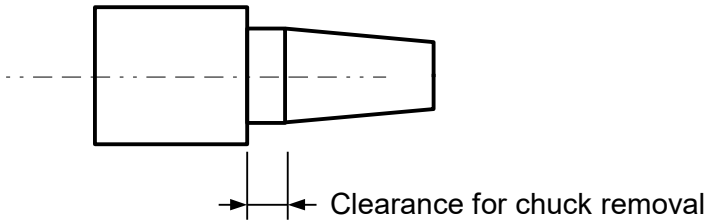

I made mine so there's about 0.2 inches of clearance. If you don't do this, you may have a tough time of removing the shaft and will have to cross-drill it and use e.g. a Morse taper drift or just bore the thing out.

Drill press safety

I've drilled many tens of thousands of holes on the drill press, so you'd think I'd know better. But today I was making a piece for some lathe tooling from some 1/4" thick aluminum plate. I was

drilling two 1/4" holes in a chunk about 2" by 1". I was thinking about other parts of the project and not paying enough attention to the task. The piece grabbed when the drill broke through and spun in my fingers. I got a little cut on my index finger that required a Band-Aid. This was a foolish injury, as I know better. I grabbed a machinist's clamp to hold the piece and finished the holes with no problem.

The lesson, of course, is to **always** be conscious of that drill breaking through the back side and grabbing. It happens in both metal and wood, but it's usually a much stronger torque in metal. Normally, I evaluate the size of the drill and the size and mass of the piece I'm drilling and judge whether or not it needs to be clamped in something. I also try to error on the side of caution. Thus, I'm bitten like today only once every decade or two, but it's still an embarrassing occurrence.

This breaking-through torque goes up with increasing drill diameter. Sometimes you have to drill a large hole with a big drill. The best technique is to measure the width of the drill's tip and drill a pilot hole (a 1/4" hole works fine for all the twist drills I have up to 1.5" Ø). Then use as slow a speed as you can to drill (consumer drill presses never go slow enough, so use a milling machine if you can). When you get near to the drill point breaking through, stop and drill from the opposite side if possible. Even better, get a sharp step drill and use it to finish the drilling. I have a Lenox 1-3/8" step drill my son-in-law gave me that works well for this.

Stay-Brite silver solder

This solder comes in a container about the size of a pill bottle and contains a roll of solder wire (about 1/16" diameter) and a small plastic container of liquid flux. I've had good luck with it in soldering things and it adheres well to the metals I use in the shop (steel, brass, and copper, but not aluminum). Current price in mid-2015 seems to be about $10; you can buy a 1 pound roll of 1/16" diameter silver solder wire for around $50 and that's what I would do if I was planning on doing a lot of silver soldering.

The solder is 3.5% to 4.5% silver with the remainder tin.

The basic soldering task is quite similar to soldering electrical parts with tin-lead solder. The first rule is that the parts to be soldered must be scrupulously clean. Scrub them with soap and water and follow up with an acetone cleaning. You want to be soldering bright, fresh metal. The parts must fit closely together; I usually machine things to be around 0.001" to 0.002" clearance. Put a drop or two of the flux on the parts and heat them evenly until the flux liquid evaporates and turns dark. Then touch the solder to the joint and it should quickly melt and wick into the joint.

Wrap a wet rag or paper towel around parts of the work that you don't want to be heated up (e.g., the cutting edges of a carbon steel reamer).

Flux

The Stay-Brite solder comes with a small container of liquid flux, so that should suit your needs for a while. The MSDS from Harris (the manufacturer) says the flux contains:

Material	CAS	Percentage
Zinc chloride	7646857	< 40 %
Hydrogen chloride	7647010	< 15 %
Ammonium chloride	1212529	< 25%
Water	7732185	< 70 %
Methanol	67561	< 5 %

This Stay-Brite flux has an acid-like smell; it's a colorless liquid of pH 2 to 3. Specific gravity is 1.224 at 70 °F.

I've read that boric acid and denatured alcohol can be a good flux for silver solder. http://riograndeblog.com/2012/08/mark-nelsons-tips-mixing-boric-acid-barrier-flux/ gives some tips on making it:

The boric acid is a white powder; mix with a commercial denatured alcohol. Mix them in a 50:50

volume ratio, then dip or paint it on the pieces to be soldered. Burn off the alcohol (or let it evaporate) and you'll be left with a white coating.

This is a flux that is used to prevent oxidation of the materials. You also want to use a flow flux to help the solder flow evenly over the surface. Some fluxes used with jewelry and sterling silver stuff: Handy Flux, My-T-Flux, Jel Flux, Rio Ready-Flux, and Grifflux.

Here's another recipe from http://www.experts123.com/q/how-do-you-make-silver-soldering-flux.html: (volume units) 2 parts borax, 2 parts potash (probably potassium carbonate or KCl), and 1 part table salt. Store in a lidded jar.

Sorting fasteners

The typical shop will accumulate lots of fasteners over the years. They're often in coffee cans or boxes and completely jumbled in size and type. Most of us never bother sorting them out, as we think it takes too much work.

While sorting does take time, I've found it's not too onerous if you have some simple tools and do it when you have some spare time. Here's how I do it. One of the lessons is: **don't try to do all the fasteners you have at once** -- that's too big a job. Break things up and do an hour or so on a cold winter night and you'll be surprised by how well things can be separated and organized. If you have a lot of stuff to sort through, you may be surprised that you have a pretty good inventory of fasteners for your shop and don't need to buy things as often. If you don't have a selection of fasteners, haunt the garage sales and flea markets and you'll come across something reasonable. My wife found a craigslist ad for some free stuff; it turned out to be a neighbor half a block down the street and I got a wheel barrow-full of about 50 pounds of all kinds of fasteners. After sorting, I gave the majority of the stuff away, as it was more than I could possibly use.

The most important tool is an old plastic cafeteria tray. You dump a bunch of fasteners onto the tray while sitting at a table and you can then sort them into types and sizes. If you search the web, you can also find pictures of sheet metal trays people make that include a funnel to help you pour things back into a container. Use good lighting to do the sorting.

I keep a magnet handy to determine whether a fastener is plain steel or not. Brass and stainless steel fasteners won't be attracted to a magnet (some stainless steel stuff might exhibit a small attraction, especially hardened lock washers). I use a pair of tweezers to pick out items. Small plastic boxes are used to help with intermediate sorting.

I also keep a plastic tool made for fastener sizing handy, but I can usually tell a US fastener size by just looking at it. I have few metric fasteners, so this makes sorting easier.

Here's an example: last night I sorted a coffee can full of sheet metal screws. These were first sorted into head type: pan head, hex head, and flat head. Rusted/corroded stuff was tossed out. Then they were sorted into lengths. The screws were put into plastic zip-lock snack bags; a piece of 3x5 card was labeled with the length and head style. If there were enough of a particular diameter in a given length, then a separate bag was made for those screws.

You'll find that you'll select the same size fasteners from the tray -- once you have one in your hand, you use it to visually compare to others that you pick up with the tweezers. I try to pick out the largest stuff first and leave the small stuff for the end.

A handy gauge that's reasonably quick to make is e.g. a chunk of 1/4 plate with holes that are the major diameters of the threads you most commonly encounter. I made mine (see Figure 1) to have the following thread major diameters: #4, #6, #8, #10, 1/4, 5/16, 3/8, 7/16, and 1/2, as these cover the US thread sizes I commonly use.

There are a number of commercial tools on the market to check fastener sizes and I have a few of them, but I don't use them very often. Instead, I usually measure the OD with dial calipers, then check the thread's pitch with a thread pitch gauge.

Here's a design of a thread gauge that can be made with a lathe and a drill press from some square plated key stock (I haven't made any of these yet, but plan to do so some winter when things are

slow):

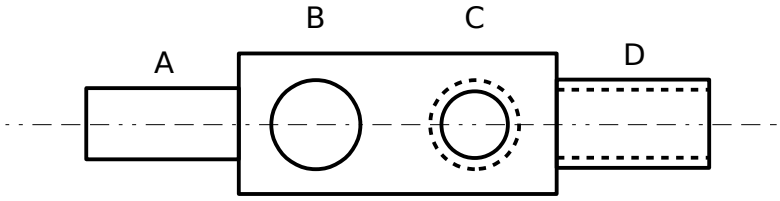

The cylinder at A is the size of the tap drill, so will quickly fit typical nuts with that thread. At B is a hole with the thread's major diameter. C is a tapped hole to check external threads. D is an external thread to check internal threads. Stamp the thread size on the gauge.

Another tool is the following set of holes in a 2 inch diameter steel disk 3/16 inches thick:

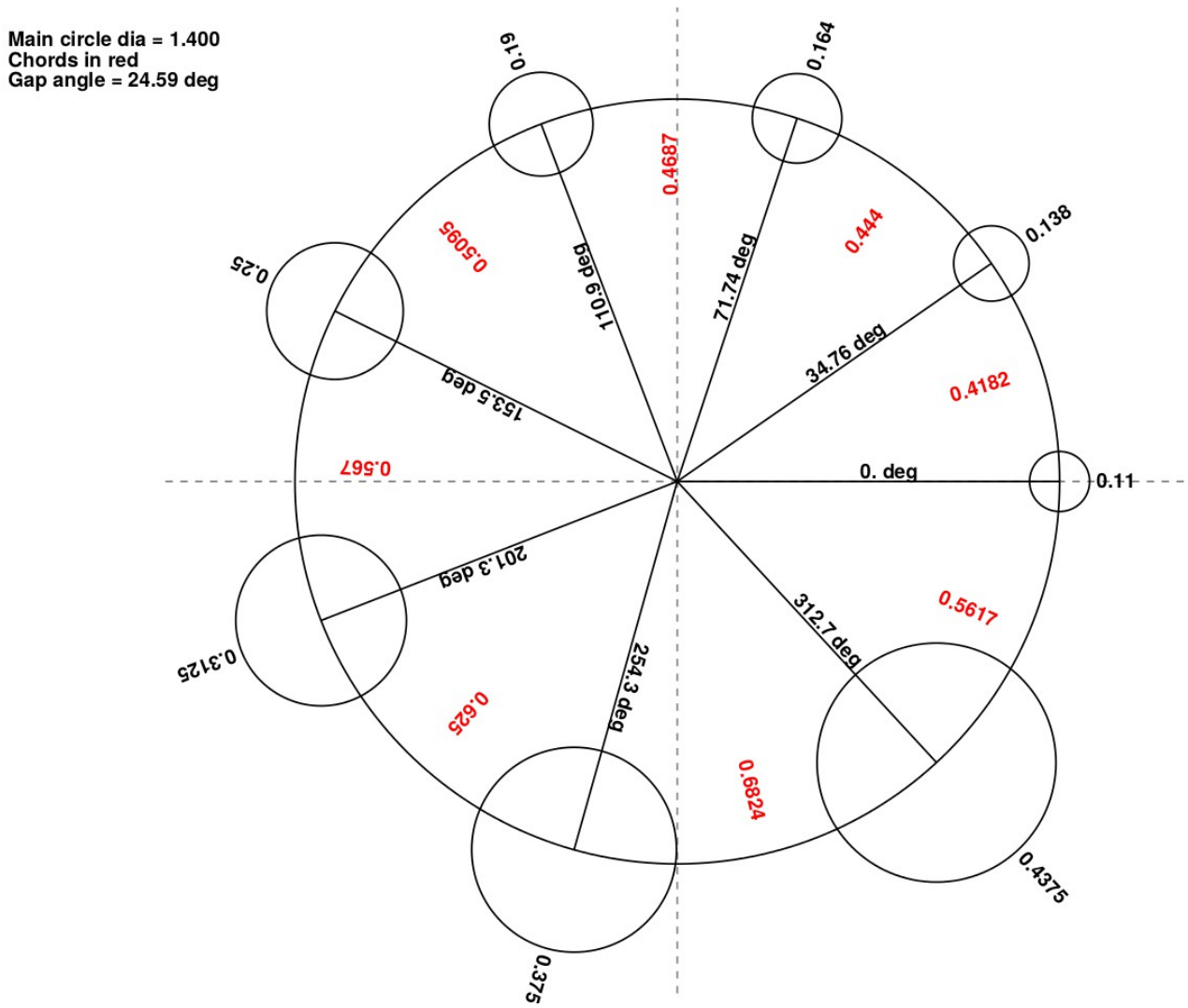

Figure 1

Text 1: Gauge for sizing thread OD

The red chord numbers are the distances in inches to set your dividers to in order to lay out the hole locations so they're evenly-spaced as shown.

I use this tool to quickly sort by diameters. I bored each hole on the lathe so that it was within 0.001" of the nominal size, so it will be a gauge useful for other tasks too.

If you have a supply of pill bottles, they can make handy containers for smaller fasteners. I also use left-over clear plastic jars from the kitchen (mayonnaise and peanut butter jars) to hold larger fasteners. Find some adhesive labels that fit well and write the fastener size on them and put on the jars. Years ago, people often nailed baby food jar caps to a board and stored their fasteners in the baby food jars, but I don't allow glass containers in my shop, as they are too easy to break when dropped on the concrete floor.

Breaking a tap

The other day I broke my third tap in 35 years, a 1/4-20 taper tap I bought 45 years ago. It was a heartbreaker, as it was my favorite tap and I had tapped hundreds if not thousands of holes with it. The other two times I've broken a tap were with a 4-40 tap in brass and a 6-32 plug tap in aluminum.

It is an aggravating situation, as there's usually no easy way to get the tap out -- thus, the work is usually ruined, which makes it memorable. You can buy Walton tap extractors at about $50 each and try one of those -- this works for folks in industry or who have well-heeled customers, but not the on-a-budget hobbyist like me. Other folks try to drill out the tap with carbide drills or end mills, weld a shank to it to turn it out, try to grab it with jeweler's pliers, or use electrical discharge machining to disintegrate it[2]. I don't have any of those specialty tools and getting someone else to take the tap out would cost more than the workpiece is worth. I decided to relocate one of the holes and ignore the broken tap.

On reflection, my reason for breaking this tap was probably not paying enough attention and using a tee-handle tap wrench I turned with one hand. This was a 1/2" deep hole in a steel block and I should have used a regular 10-12 inch long tap wrench, not a tee handle wrench. While you'd think the longer wrenches would make it easier to break a tap because you can apply more torque, the benefit is that you turn it with two hands and load the tap more equally (i.e., avoid side loads, which is what I suspect I did based on the asymmetrical way the tap broke).

The other contributors to breaking taps are:

- Not breaking the chip often enough.
- Trying to go too fast.
- Not using enough lubricant.

Whether you're an amateur or professional machinist, a broken tap is a real bummer.

For some reason, I find using a 6-32 tap in 6061 aluminum a bit of a challenge. The best procedure I've found is to use a lard/graphite/mineral oil mix as a lubricant and go slowly, backing up the tap frequently. Whenever possible, I like to tap with a sequence of taper, plug, and bottoming taps to minimize the chance of breakage.

Reusing PVC fittings

If you have a lathe, you can bore out glued PVC pipe fittings and reuse them. For 1" or smaller sizes, this may not make a lot of sense unless you can't get replacements -- for example, my wife and I stock lots of 3/4 fittings (we use these by default with all of our sprinklers), so we'd just go get a replacement fitting.

However, larger fittings can be more expensive and/or harder to find. Example: a threaded union in 1.5" or 2" pipe size can cost $8-$10 or more. I've had to replace damaged piping using these glued threaded unions and I found that they can easily be bored out and reglued.

To avoid this type of work in the future, my wife and I have standardized on always using threaded unions that use threaded fittings, not glued, because glue-to-thread PVC adapters are cheap.

The boring is straightforward, as you know the nominal inside diameter must be the same as the pipe's outside diameter. Bore the hole with a 2° included angle taper (set the compound to 1°).

---

2 Another suggestion when the material is steel in a chunk of aluminum is to dissolve the tap with nitric acid. I've not tried this, so I can't vouch for it.

Make sure a chunk of pipe fits in and jams near the front and you're done. I've even bored some of these glued fittings out twice and reused them. You can do the work with old-style calipers, but check the pipe OD carefully, as it's always out-of-round.

I've used this trick in our ditch pump's filter, which is a glued fitting in 1.5" pipe; it would cost around $80 to buy a new filter, so reusing our 30 year-old plastic filter head makes sense because it's not too hard to bore it out (most of the challenge is holding it and getting it centered in the 4-jaw chuck). I've bored out this filter head and re-glued it twice in the last 30 years.

I've also had broken PVC pipe in 1.5" and 2" threads. You'd think it would be a real pain to get such things out because you'd have to make or buy a special extractor, but it turns out to be pretty easy. Hold the fitting in a vise and use a diamond point chisel to cut down into the broken internal threads (cut the broken male piece off flush with a hacksaw first). You'll have to use your judgment to avoid going too deep into the mating part's threads and cutting into them. Once you've cut most of the way through, you can hit the protruding part with a pin punch and either back it out or break it. Or you may be able to grab things with pliers and unscrew the broken piece. The few times I've had to do this were surprisingly easy.

Socket organizer

When working on some mechanical project requiring sockets, it's rare to need a whole bunch of sockets. Instead, you'll usually find you only need a few sizes. For example, when I work on my wife's GM van, the majority of nuts and bolts are one of three sizes (10, 13, and 15 mm). I made a small organizer from some scrap 3/4" plywood. The basic organizer used some 2" long 3/8" dowels cut in half:

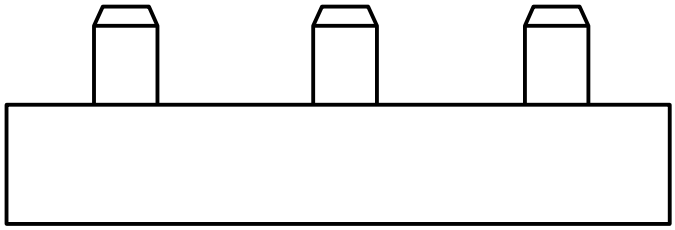

I won't bother giving dimensions, as your needs will be different. I picked a layout based on the socket diameters I know I use the most, sized to handle both metric and SAE sizes, both deep and regular sockets.

This resulted in a chunk of plywood about the size of a 3x5 card. The plywood had an ugly avocado green laminate on it (it was some scrap from our laundry room, built in 1971), so it's quite visible, which helps you to find the sockets in a mess in a cart or on the bench.

Though this organizer can't handle all the sockets I own, it has enough spaces to hold those that get used a lot. While working on a particular project, put the sockets back in the same place and you'll find you know where sockets are more quickly and you can see quickly if e.g. a particular socket has been left on a ratchet or extension, since it will be missing from its storage spot.

Update: after using this for a month or so, I found that the 3/8 dowels I used were a little too large, as I'd often pick up the whole organizer when trying to pick up a socket. I'd reduce the diameter of the dowels by 0.01 inches or so by pounding the dowels through a suitable hole in a chunk of steel flat stock.

A redesign would be to make something about the size of a 4x6 card with flexible magnetic rubber sheet over the bottom so that it could e.g. be stuck to a car's fender. Then there'd be holes to hold the common standard and deep socket sizes used. The tool companies make such things to hold a whole set of sockets, but I never need the whole set when working on a project; hence the desire for something smaller.

This socket holder works, but the best commercial holders I've used are the magnetic holders that take a set of regular and deep sockets. The magnetic base lets you attach it to a car body while

working, so the sockets are handy. You can turn the holder upside down and the sockets won't fall out (but they will if you drop it on the floor). You'll buy one of these after you've put one of the metal holders with a riveted handle that holds the sockets in a tool bag, then have the holder open up and dump the sockets into the bag. I leave my 3/8" square drive holder sitting on the metal arm of the Mac tool cart (see next section).

Shop cart modifications

A few decades ago I bought a Mac shop cart from a local used tool dealer. It is well-made and lets me wheel tools to a job at hand. It's not practical to wheel my tool storage carts out to the garage (they're too heavy and my shop is too crammed with stuff), but this cart is perfect for this task. Here's a picture of what the thing looks like (mine is red):

The cart is 30" x 16" and the top of the metal tray is 32" above the ground. The locking rubber caster wheels are 3.5" in diameter. The Mac unit I have is built for a lifetime of service if it isn't abused (it will certainly outlast me). You can find similar metal carts today for $100-$125 (the major tool dealers will sell nominally the same thing for 2 to 3 times more). Harbor Freight sells a similar cart for $80 (part number 61161 or 90428; I might prefer the three-shelf unit 97542 for $70).

I added some things to it that improve its usability:

- **Paper towel holder and shelf**: I had a scrap sheet of plywood that fit the side exactly, so I replaced the 1/4" bolts holding the metal trays to the legs with longer flat head screws and bolted the plywood to the side. I then made a paper towel holder for it along with a shelf for the bottles of chemicals I frequently use (solvent, anti-seize compound, pipe joint compound, etc.). Here's the side of the shelf bent from some 1/8" aluminum sheet:

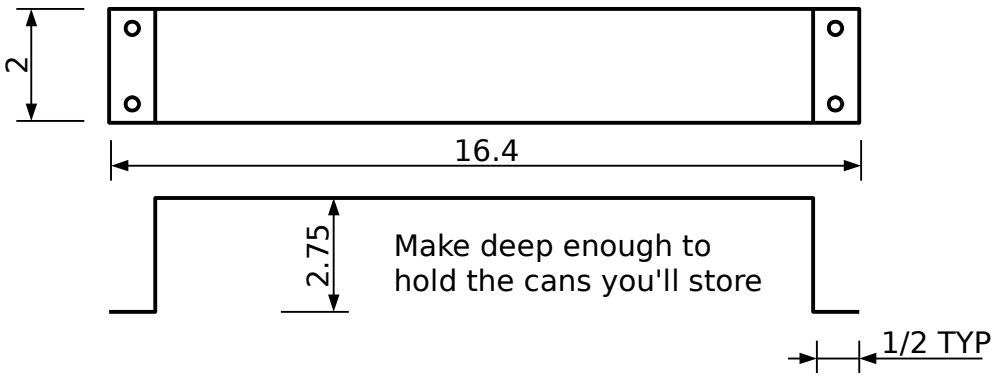

♦ A piece of wood was screwed to the plywood for the actual shelf.

♦ I had another piece of scrap plywood that, after cutting a notch, made a small writing surface that sits on top of the paper towel holder. It turned out that a chunk of 2x4 with a 1.5 inch thickness was the perfect clamp to insert under the cart's handle and clamp this board to the top of the towel holder; now it can't tip over when I'm writing on it. A nice feature is I just pull the chunk of 2x4 out and I can store the writing surface board in the shelf for the chemicals. Here's an end view of the shelf and paper towel/chemical storage board:

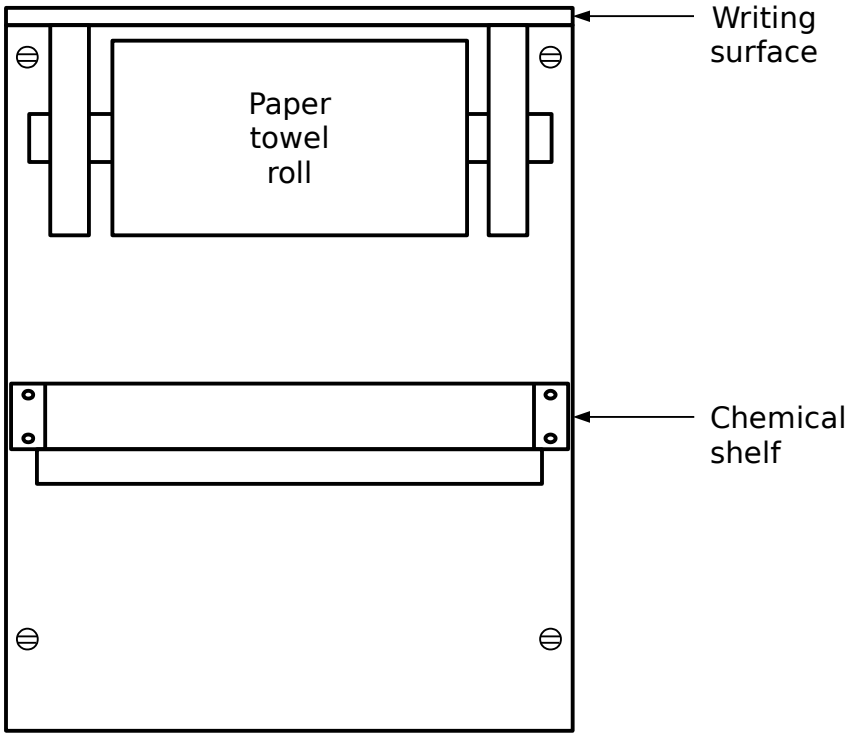

♦ It would be nice to find e.g. a white plastic sheet that could be glued to this board, would provide a smooth writing surface, and would take pencil marks that could be rubbed or cleaned off. Some PVC would work well, but Formica could be usable too.

♦ **Rear tool holder**: A 2x4 was screwed to the back of the cart and has holes drilled in it to hold screwdrivers, handles, and bits. My favorite 1/4" hex bit handle is held on a 1/4" hex spud that has a 1/4-20 thread cut on the other end; this was threaded into the 2x4. The width of the 2x4 was reduced over half the cart's length to allow a portable vise I have to be clamped to the board. Now I can do simple vise work on the cart.

♦ **Power outlets**: I mounted two duplex outlets and a 25 foot 12 gauge extension cord. A hook mounted on the side holds the cord when the cart is moved around. This lets me use power tools without fumbling around with extension cords.

Blunt start thread

This is sometimes called a Higbee end. It's used on threads that will be handled by human hands such as thread gauges or fire hose couplings. Its purpose is to remove the sharp partial thread at the beginning of a thread. The benefits are no hand lacerations and the thread is less likely to cross-thread the thread with a mating thread.

Lautard in volume 1 (page 20) of [*tmbr*] also discusses the blunt start, but spells it Higby. I haven't researched the term, but it was referred to as an old term in my 19th edition (pg. 1257) of *Machinery's Handbook* from the early 1970's.

Here's an example. I needed to turn the OD of a washer that had a 1/2" diameter hole in it. I scrounged in my scrap box and found a square-head 1/2" bolt that was 1" long, perfect for my needs, as the 4-jaw chuck was on the lathe (I'd grab the head in the chuck).

I centered the bolt and center-drilled the end. Then for future reference, I wanted a smooth pilot surface at the start of the bolt, so I machined it to just under the thread's minor diameter.

Though I made this cut with a cutter inclined at 45° to the rotation axis, it still left a sharp portion of the bolt's thread at the entrance to the thread. I used a triangular file with the lathe stopped and filed off that first partial thread. If you inspect the thread with a magnifier, it will be obvious what needs work. It only takes a minute or two at the most and you're left with a thread that the nut goes on easily and you won't cut your fingers when handling. This is a blunt start thread, also known as a Higbee cut.

If your lathe has an old taper spindle (e.g., an L00), you'll probably see a nicely-formed Higbee cut on the chuck's threads.

A pillar file works better than a triangular file because it won't cut accidentally into the adjacent threads. But you can get practical results with either type of file. If you don't have a pillar file, grind off one edge of a mill file (a belt sander does this quickly, but don't overheat the metal).

A way of doing this in a shop for more production type work in larger threads would be to use a toolpost grinder (you can find pictures on the web of this process) or it could be NC milled.

For more information, look up American National Fire Hose Connection Screw Thread in something like *Machinery's Handbook* from the last few decades. The 27th edition (pg. 1874) references the National Fire Protection Association's Standard NFPA No. 194-1974. No doubt it will specify the Higbee cut in more details in the standard, but once you've seen an example, you'll know exactly what's meant. If I were to specify it on a drawing for a machine shop, I'd say something like "smoothly mill off the starting thread flush with the thread's root diameter until the full thread cross section is reached (Higbee cut)".

In the early 1900's, there were more than 600 different fire hydrant thread sizes. Lack of standardization resulted in large losses when out-of-town fire equipment couldn't connect to another city's fire hydrants. In 1904, the Baltimore fire brought this silly problem to national attention and standards were generated. You might think that all fire equipment would have been standardized in the subsequent century, but you'd be sorely wrong. The large monetary losses of the Oakland fire of 1991 were partly caused by continued thread incompatibilities.

Bolts in an auto

I recently put a blunt start thread on two bolts used to hold the EGR valve to the top intake manifold on my wife's van, a 3.4 liter Chevy Venture. It is difficult to get tools in the crowded space to service this valve and the bolt heads face towards the firewall. It's easy to drop a bolt, nut, or tool behind the engine, never to be seen again. Besides starting the bolts, you have to keep a gasket aligned; you can't drop either bolt or the gasket because it's likely you won't be able to retrieve it (this area of the engine compartment is so crowded you can't get your hand in here adequately). I used a piece of

3/16" copper pipe in one hole to keep things together. There's virtually no room to turn the bolts with your fingers, which makes the bolts hard to start. I'd get them started, but then they'd jam and feel like I was possibly cross-threading them. I stopped before I damaged the aluminum casting they thread into (the top intake manifold).

I put both of these 8-1.25 mm bolts into a 5/16" collet on the lathe and turned a pilot at the tip of the thread about 0.15 inches long. I made the pilot diameter about 0.005" under the root diameter of the thread (measure it with thread calipers). Then I used a pillar file to make the threads a blunt start thread. This was worth the effort, as these bolts easily went into their holes and they were easy to tighten with a socket on a nutdriver handle. If I had been a little wiser, I would have first run a tap through the two tapped holes before putting the manifold back on the car to make things even easier.

In some of the later-model GM cars I've worked on, I've noticed most of the bolts have a blunt start form and include a radiused nose. This is a nice touch, as it adds little to cost/weight and reduced the chance of cross-threading a tapped hole, which results in a lot of cost/downtime to a mechanic.

Learning shop techniques

When I was young, my parents were determined that I was college-bound and I was not allowed to take things like metal shop or wood shop in high school. I wound up with technical degrees and worked in R&D as a scientist, engineer, and programmer.

However, I have always been interested in making and fixing things, but I had no mentor, so I had to teach myself. I learned by three methods:

- ♦ Ask one of the shop employees or technicians in the labs I worked in.
- ♦ Read a book.
- ♦ Experiment.

The latter two methods were used by far the most. It's not the most efficient method of learning, but you do learn to think for yourself, develop intuition, and you'll make many mistakes along the way, driving a lesson home (perhaps better than reading a dry textbook will). Learn from those mistakes and develop your techniques.

You will likely suffer from gearhead syndrome, especially if you have significant disposable income to fund this condition. This is something a friend and I have chuckled about over the years, especially with us engineering/science types -- we often think that throwing money at something to buy some special gizmo will help us get the job done -- and sometimes the gear becomes more important than the task. I had to buy lots of tools over half a century before I learned that an important idea is to master some of the basic tools that get used over and over again. Most of the tools I've purchased sit in the toolbox and are used only occasionally; 90% of the work is done with 10% of the tools, in true Pareto fashion. That doesn't mean the other 90% is worthless, just that they're only used in special circumstances.

Much of the fun I have working in the shop also involves design. I like to design things and it's especially fun (and instructive) to then make the things you design. You learn to only design things that can be easily made in your shop; conversely, you extend your making techniques to broaden the design choices you have. Improving your fabrication skills will make you a better designer, ***so it's important to do both designing and fabricating***. If you work in industry as a designer, you'll lose credibility fast with the fabrication people if you don't understand what they do or ask for their advice. On the other hand, when you gain their respect and they know you're looking out for what's important to them, they'll bend over backwards to help you.

In my opinion, there are no fabrication tools more useful in the shop than the hand-held electric drill, the drill press, and drill bits. One of the things you'll want to do is learn to hand-sharpen a drill, as you will need this skill often because you'll drill thousands of holes. You can teach yourself or get an experienced machinist to show you. I learned how by teaching myself and can do it in a pinch, but I've found that the Drill Doctor machine I purchased a couple of decades ago is more efficient and

faster at sharpening a bunch of drills than I am. Thus, I don't frown on using a machine to do this task either. And you'll probably use your drills for life -- I purchased my fractional and numbered drill sets in the 1960's and they will last much longer than I will. If I had to do things over, I'd buy a full metric set in high speed steel and get away from the silly screwball US drill sizes.

The tool I use most often in my shop is my humble 6 inch machinist's rule. It's so important that I think you should buy the best money can buy. This means a hardened, tempered, and carefully-graduated machinist's rule with a satin chrome finish. The other tool nearly as important as a rule is the combination square (the tool that L. Starrett invented and started the Starrett company in the late 1800's). Get a good one; it should last you a lifetime of use (if you do metal work, get a forged and hardened/tempered head; for light duty stuff like woodworking and general DIY stuff, a cast iron head is fine). You can do without the center head (I use hermaphrodite calipers for finding centers instead), but you'll probably want the protractor head. Note that the level vials in the combination square are more sensitive than the typical torpedo level (at least in my Starrett combination square). In conjunction with a rule, I use old-style calipers a lot (firm/lock joint, spring-bow, hermaphrodite, and dividers). You can do an enormous amount of practical work with rule, combination square, and old-style calipers. Of course, you'll also want to have some dial or electronic calipers and a micrometer or two for more precision metal working.

Old lathe tools

Alas, as of 2015, the three used tool stores that I have frequented in my town for the last 35 years have gone out of business. While they were in business, however, I made some good purchases of used tools, as I came to prefer buying used stuff over new stuff to save money.

At one tool store that I had been buying from for many years, I knew the owner (he lived down the street from me) and he always tried to give me the best price he could -- he knew I wouldn't dicker or argue over the price, as I knew what tools were worth to me and he did his best to give me attractive prices (I bought a lot of stuff from him over the decades before he died). One day he had a box of miscellaneous machinist stuff that weighed around 50 pounds. It was filled with drill bits, Allen wrenches, lathe tools, milling cutters, etc. He had already cherry-picked the measuring tools that he could sell, but I knew he wasn't interested in messing with all the bit pieces. I asked him what he wanted for the box and he told me $100. I snapped it up and it was probably the best purchase I ever made, as there were hundreds of ground lathe tool bits, end mills, and Allen wrenches, along with many miscellaneous things; their equivalent cost new would be many thousands of dollars. The box probably came from the widow of a retired machinist. Decades later, I'm still using those tools. Some of the lathe bits would have taken me days to make by themselves, even assuming I had the skill and grinding equipment to make them. Thus, be on the lookout for such things once you have your basic measuring tools -- most tool dealers won't want to spend the time necessary to classify and organize such stuff, as it is specialized inventory that won't sell quickly. However, this was before the Internet and ebay, so this may no longer be true.

Gas welding

In the 1960's when I was in college, I wanted to learn to do welding, so I bought an oxyacetylene welding outfit, tanks, and a cart to hold things (I lived in an apartment and didn't have the ability to use an electrical welder). Today, oxyacetylene welding is used much less frequently than in the past (the various arc welding methods are so versatile), but a welding torch is still useful for brazing, soldering, welding, heat treating, etc.

I had to surreptitiously practice on things in my apartment; no doubt the apartment manager wouldn't have been happy knowing I was doing this.

One of the problems with teaching yourself is you won't learn the basics by experimenting. I didn't get into trouble, but I should have gone to the library and gotten a basic welding book and learned things properly -- I was stupid not to.

The primary thing that could have gotten me into trouble is that acetylene **is explosively unstable when it is under pressure** -- and I didn't know this.

Some of the basics are (pressures are gauge pressures; i.e., relative to atmospheric pressure):

- ♦ Brass fittings; left-hand threads for acetylene, right-hand threads for oxygen. Don't use pipe dope or Teflon tape.
- ♦ No oil or grease around oxygen.
- ♦ Never repair leaking hoses; replace them.
- ♦ Check for gas leaks with soapy water.
- ♦ Unscrew your regulator adjustments when done and shut the tank valves. My regulators are still working perfectly after 50 years of use because I religiously do this.
- ♦ Open the tank's main valve slowly so you don't hit the regulator with a pressure burst.
- ♦ Oxygen in the tank is at high pressure (on the order of 2000 psi = 14 MPa = 136 atmospheres).
- ♦ The high pressure gauge tells you the pressure in the tank; the low pressure gauge tells you the pressure the regulator is providing to the hose.
- ♦ Acetylene is explosively unstable at about 30 psi and above, so it is dissolved in acetone in the tank. A porous filler is usually used like zeolite, crushed fire brick, balsa wood, etc.
- ♦ Crack a tank's valve to blow out any crud before attaching the regulator.
- ♦ Do not use acetylene below freezing air temperatures, as acetone may come out instead and clog the regulator.
- ♦ Open the acetylene tank's main valve no more than 1 turn (1/4 turn is usually sufficient).
- ♦ **Never set an acetylene regulator above 15 psi**; I use the routine setting of 5 psig for the acetylene line. Free acetylene at about 30 psi or more is unstable enough to ignite/explode without an ignition source.
  - ♦ I light the acetylene flame and open the welding tip's acetylene valve wide open. Then I adjust the regulator's pressure so that I get the biggest flame I want from that tip without it blowing itself out.
  - ♦ I use enough oxygen pressure to get a slightly oxidizing flame when welding with the torch's acetylene valve open fully (this can be 5-10 psi). For cutting, set the oxygen regulator to 10 to 20 psi depending on the tip (see the manufacturer's instructions).
- ♦ Don't use a tank whose high pressure gauge reads zero because the gases can mix, leading to an explosive mixture -- replace the tank.
- ♦ If you transport a filled acetylene tank horizontally, store it vertically for a couple of hours before using.
- ♦ Keep the steel protector tops on all tanks unless they have regulators attached and are properly secured.
  - ♦ Secure gas cylinders to the tank cart with chains or heavy rubber snubbers.
- ♦ Be careful with heating plated metals with the torch -- the plating material will likely be hazardous as fumes (e.g., cadmium plating or cadmium-bearing silver solder has killed a number of people).
- ♦ To turn off the torch: shut the torch's acetylene valve, then the oxygen valve. Close main supply valves. Open torch valves to bleed out remaining gas in hoses (one at a time and close one before opening another). Unscrew regulator adjustment screws to relieve mechanical pressure on diaphragms.
- ♦ Pay attention to where the hoses are and do not hit them with the torch flame or drip molten metal on them -- you'll then have to replace them. I've been careful and I'm only on my second set of hoses in 50+ years (the first set dried out and cracked after 40 years).
- ♦ When you don't get a good flame from a tip, use a tip cleaner to clean it out. These are small rods that have ribs that essentially broach the crud out of a tip hole. Never use a drill bit for this

-- you'll damage that precisely-made hole.

Personal safety:

- ♦ If you misuse oxygen and acetylene, you can wind up with explosive mixtures of gases that can easily maim or kill.
- ♦ Use welding goggles to look at molten metal (there is significant infrared radiation besides being optically bright). I recommend avoiding the cheap goggles with elastic bands that go around your head -- the elastic has a very short life. Get the plastic head-band type with a screw size adjust in the back and that can be flipped up onto your forehead. They're more expensive, but will last a lot longer. Get a polycarbonate filter that won't break (glass easily breaks during normal shop use).
- ♦ Use heavy leather welding gloves to protect your hands from burns.
- ♦ Wear a leather jacket and pants or a leather apron with sturdy leather shoes.
  - ♦ For welding of small things with small tips, I'll sometimes not use protective clothing. If you're cutting steel or welding heavier things, however, you're going to want leather boots, leather leggings, etc. You'll learn your lesson once a molten drop of steel falls on an unprotected shoe and burns into your foot.
- ♦ Assume everything is hot after welding. Never test to see if something is hot by touching it with your fingers.
- ♦ Put a fire extinguisher on your welding cart -- and know how to use it.

Oxygen safety:

- ♦ Welding oxygen is used for one thing only: supplying oxygen to the welding or cutting torch. Do not use it for anything else. In spite of this warning, there are still a few idiots that need to be told:
  - ♦ Never use grease or oil around oxygen; it creates a fire hazard.
  - ♦ Never spray dust etc. off clothes with pressurized oxygen. The oxygen can stay behind in the fabric and make it much more flammable.
  - ♦ Never use oxygen to power pneumatic equipment. It can mix with grease or oils and cause a fire or explosion.
  - ♦ Never use oxygen to blow out lines. Flammable vapors can be present and you can create a fire or explosion hazard.
  - ♦ Never use oxygen to start a car.
- ♦ A typical oxygen bottle holds 6.3 m^3 at 15 MPa at 20 °C (224 ft^3 at 2200 psi at 70 °F). That's a dangerous pressure, so you don't want the bottle falling over and having the valve broken off. Thus, unless the oxygen bottle has a regulator attached and is secured in a welding cart, it should have the protective safety cap installed.
- ♦ Check the hydrostatic inspection date that is stamped on the bottle. The bottle needs to be tested every 10 years.
- ♦ A cylinder damaged in any way needs to be removed from service and the pressure safely released (e.g., vent outside slowly away from buildings and people). Return it to a gas bottle vendor for a replacement.
- ♦ Read about the Apollo 1 disaster and Soviet astronauts who died in pure oxygen environments. Most of the codes we have concerning building construction, electrical safety, etc., have come about because people have died.

There's a bit more you can do. Put some labels on your welding equipment:

- ♦ Put on a general sign saying "This is dangerous equipment. Do not use without training and explicit permission from <your name here>."

- ♦ Put "Danger! 15 psi max" on the acetylene low pressure gauge.
- ♦ Put a hanging sign on the acetylene regulator saying "Acetylene under pressure is unstable and explosive."
- ♦ Put a sign on the oxygen low pressure gauge saying e.g. "20 psi max".

One reason for these message is to remind you if you haven't used the equipment in a while. But you also may have kids or grandkids in your shop -- and they may be unsupervised. They might be tempted to play/experiment with the torch when you're not there. Assuming they can read and will follow the warnings, at least they won't be exposed to the obvious hazards.

Even better, take them aside some time and explain to them that the various types of equipment in the shop have all resulted in someone's death or injury at some time and they can be dangerous to people who don't have proper training. Then get them to promise to never use anything in your shop without your direct and immediate permission. To encourage interest and learning, also tell them that you'll give them some of this training when they're interested and you feel they have enough maturity to handle the responsibility.

> I have a niece whose ex-husband worked in a machine shop as a machinist. One of the fundamental rules in a machine shop is that you don't work with long sleeves around moving equipment. He did -- and one day his shirt caught in a cat head on a big lathe and severely mangled his arm, leading to lots of medical treatment, surgery, a long convalescence, and a gigantic scar. After centuries of such injuries, you'd think they wouldn't happen anymore, but people will often not follow basic safety instruction, thinking they're not at risk or the risk is low.

The silhouette

An easy thing to do in the shop is to align and position things by putting the objects in silhouette. Put a white card behind the objects and orient a lamp to light the card, not the parts.

You'll find this a surprisingly useful technique. I use it quite a bit on my lathe. For example, put a cutoff tool in the tool holder and bring it close to the work. Hold the work in a 4-jaw chuck and put the gap between the cutoff tool and the work in silhouette. I do this by laying a white 3x5 card on the carriage and aiming the lathe's lamp at it so that the lamp doesn't light up the cutting tool and work.

Rotate the spindle by hand until the gap is a minimum (move the cutoff tool closer as the runout drops). Then loosen the jaw on the opposite side and tighten the jaw on the same side. Some experimentation with a dial indicator will show you that this is a fast and effective technique[3]. You can also use a continuity checker to do the same thing electrically if the work is conductive.

Another example is checking the alignment of the tailstock to the spindle. Put a center in the headstock and tailstock, bring them close so that they are nearly touching, then put them in silhouette. If the points are sharp, you use a magnifier, and you look down on the alignment from above, you can detect small misalignments of the tailstock and correct them without making measurements or making cuts on a test bar.

Digital runout electrically

If you have a continuity tester, you can use it in the lathe or mill to test for metal-to-metal contact. This lets you digitally assess the runout of the work or spindle.

Insulate a metal probe and measure the continuity between the work and machine body (this assumes the work is in electrical contact with the machine body and that the work is a suitable electrical conductor). When the probe just touches the work, the tester will indicate continuity. This can be used to center work in a 4-jaw chuck: when the light comes on, that portion of the work is closest to the probe and just touching it. Adjust the jaws and retest. You'll find you can center the work with a few iterations and it goes pretty fast.

The silhouette method works for this too and doesn't require any special tools, but the continuity

---

3 My two Starrett dial indicators have quit working, so I discovered this technique by necessity. It works so well, I don't bother using a dial indicator anymore for work alignment in the 4-jaw chuck.

tester doesn't require good eyesight. I use both methods in my shop.

Reusing stuff

Be cautious about throwing things out that might be useful later. It takes time to salvage stuff, but you can wind up with useful stuff you won't have to pay for later.

Fasteners are a good example. Save the good ones, sort them into the different sizes, and you'll save money/time by not having to go to a store to buy some.

The torque-to-yield head bolts in a car's engine are thrown away after they are used once. They can make useful steel stock for shop projects as long as you don't need high strength.

The aluminum castings from auto stuff are typically easy to machine and can provide small chunks of aluminum (you'll already know this if you cast aluminum). You can cut them up on a wood-cutting bandsaw or break chunks off with a hammer. They can provide low cost material for making aluminum castings.

Lead tire weights can be melted down and cast into things like bullets or fishing weights.

Old milk jugs and other polyethylene scrap can be cut up and put into an oven to coalesce and be reformed. Look for HDPE or 2 on the plastic to identify it as polyethylene. Search youtube for a variety of HDPE recycling ideas. Examples: mallets, knife/tool handles, rails for sliding things on your table saw.

I salvage the sheet aluminum used in old electronic equipment because it's useful for fabricating things. It cuts easily on the band saw.

Fluorescent cable ties

When working on a complicated device (e.g., a car engine), it can be convenient to put a fluorescent cable tie (also called tie wraps[4] or zip ties) around something to remind you that you need to do something with it (or hold a note to it to help you remember what needs to be done). I like the fluorescent green ties and I find the 8 inch size is the most useful. When I take a part out, I'll put all the bolts back in their holes and hold them in place with a tie wrap if needed -- thus, there's no chance of losing things or wondering what goes where.

> Get true fluorescent ties, ones that will fluoresce brightly under UV light. In a dim room, these stand out with a UV light and you won't accidentally leave one behind, as long as it's in your line of sight.
>
> Modern blue LEDs can be used to cause this stuff to fluoresce, so you don't have to have a UV light. White LEDs in a flashlight can also work.

Another method of doing this is finding some fluorescent tape used to e.g. flag things while surveying. One roll should last a long time.

Some double-sided fluorescent Velcro straps would be ideal for this because they could be reused, but I haven't come across any of those.

Tie wrap alternatives

When I was in college, I disassembled a number of World War 2 electrical devices. These were surplus military things that yielded useful components and fasteners. The electrical wires were invariably beautifully laced into harnesses with waxed thread. For the occasional needs of the homeowner, waxed dental floss works for this. You can also pull braided nylon cord through some beeswax. Or, buy a roll of #9 waxed lacing twine. Search the web to learn how to lace wiring -- it's easy and will last indefinitely.

Learn to whip things and tie constrictor knots in waxed thread; this is pretty fast and works well. Finally, head to the office supply store and buy rolls of Velcro strips used to fasten computer wire bundles -- they'll grip well, be easily removable, and can be joined to make longer strips (in May of

4 From the first commercial product Ty-Rap in 1958, a registered trademark.

2018, I found that Lowes now sells these). I use these to secure my extension cords into a bundle I can hang up without generating a mess when I later deploy it.

Hand wipes

My wife had a package of baby wipes that had dried out. She added some isopropyl alcohol to the package and let them soak it up. These made great wipes for our hands while we were working on our car. They cut the grease well and e.g. let you go into the house to get something. Then cleanup with soap and water is quicker and more effective. Most isopropyl alcohol has a goodly amount of water in it (e.g. 30% by volume), so just add it straight from the bottle.

Many people like to wear nitrile or mechanic's gloves when working on cars, but I usually don't. My hands get filthy and these wipes are the best cleaners I've found for a quick clean-up.

Adapt laminate router to lathe

Decades ago I made a simple adapter that let me hold my Dremel tool in the lathe for light-duty milling and grinding (it held the Dremel with two worm-drive hose clamps, simple and effective). The Dremel died, but I have a Porter-Cable 7301 laminate router, so I made an adapter that lets it be held in my Aloris-style toolpost.

I made it from a chunk of steel 1/2 x 2 flat stock:

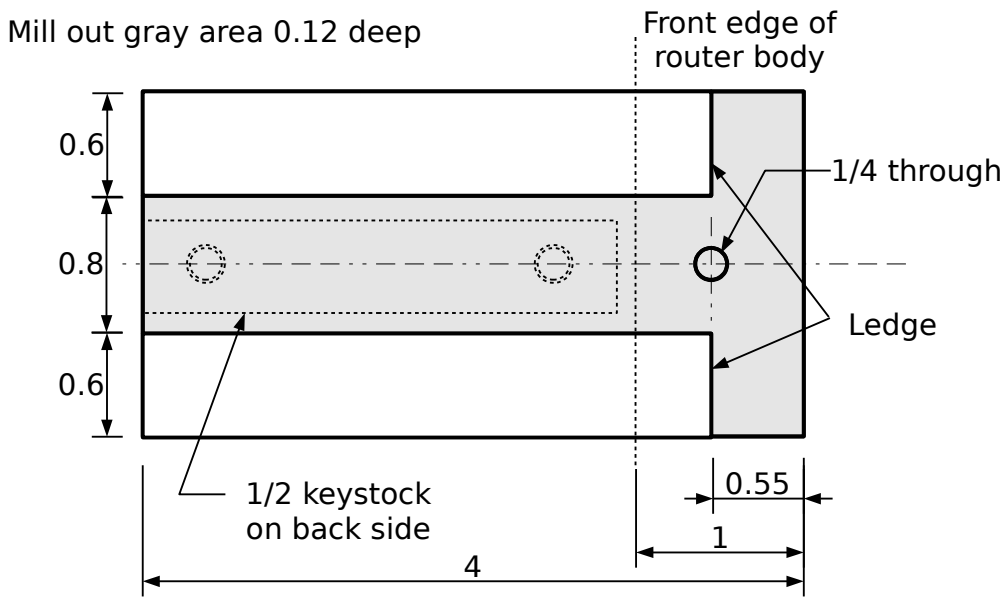

There's a chunk of 1/2 keystock screwed to to the back with two 1/4-20 socket head cap screws; the keystock is gripped by the set screws in the Aloris-style tool holder.

Surprisingly, the plate is held to the router with one 1/4-20 socket head cap screw which screws into a tapped hole in the router, much like a camera mount. I was going to use an additional clamping scheme to hold the back of the router with a hose clamp, but after testing, this turned out to not be necessary, as long as I don't take heavy cuts and the 1/4-20 bolt is tight. The ledge provides stability and it must pass through the center of the 1/4 hole.

The router turns at 30,000 rpm, which is usually too fast for 1/4" carbide bits in metal, which is what I usually am working with in my lathe. Since it is a motor with brushes, I can use it with a lamp dimmer, so that's what I'll slow things down with. I'll put up with the loss of torque and be wary of cooling problems with the router.

I bought my Dremel tool in the 1970's and it gave me pretty good service for an inexpensive device with journal bearings (ball bearings would have been a better design). Over the last decade or more, I've read so many online posts about people unhappy with Dremel's product quality -- so

much so that I will never buy another Dremel product. I'm glad I bought a Foredom commercial tool a few decades ago; it's still working well. But my favorite has always been that first Dremel tool that worked well for me.

Chipping

I needed a 1/2" square hole through a chunk of 1-1/8" square steel bar stock used in a project so that I could insert a 1/2 square drive extension. It's straightforward to mark out the square, then drill a 1/2" hole at the center. More challenging is the use of a diamond point chisel to chip out the corners.

I've done a few square holes in brass, but steel is more work. I finally got the square hole size I wanted and I was able to push in a 1/2 inch square drive extension in all four orientations. It was quite a bit of work with the hammer and the chisel, mainly because it had been years since I had done this and there was quite a bit of material to remove. It looks like it should be easy to do, but it's harder than it looks and is something you have to learn by doing.

I have two diamond point chisels and I'd use both of them to chip out the corners until the point in the corner of the chisel got a bit deformed. Then I'd position the chisel on the grinder and grind a new face on it. I learned that I had sharpened the chisel at too steep an angle; reducing the angle to 10°-20° made the tip last longer:

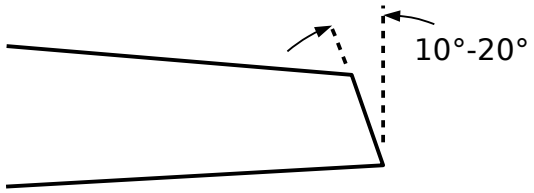

After doing this for a while, you see why the technique is called chipping. You have to tip the chisel at the correct angle so that the chisel's edge can get a bite. Then you smoothly move the chisel to the vertical while hitting it with the hammer and a chip of metal is cut away from the work.

After chipping much of the material away, I used a 1/4" pillar file to file the sides more square.

If you measure a 1/2" square drive female socket, you'll find it's typically about 0.51" wide. The mating male piece is typically about 0.49", so you can see there's nominally around 0.02" clearance. I thus had to chip the hole a bit oversize. I did this by setting my inside spring bow calipers to 0.505" on my dial calipers, then using it as a gauge to check my chipping and filing. Ball gauges or telescoping gauges would work too, but I think calipers are the best tool, as they'll spring inwards when they're too tight and the feel tells you something about the amount of material remaining when you're getting close to final size.

This was a good exercise to practice a skill not many people have anymore -- but you'll find it takes quite a bit of time (I didn't log my time, but I'd estimate I spent between one and two hours on it). However, you'll also see that you'll get better with practice and then have a skill in your pocket to make things you couldn't make before.

I grind flat cold chisels to two different points:

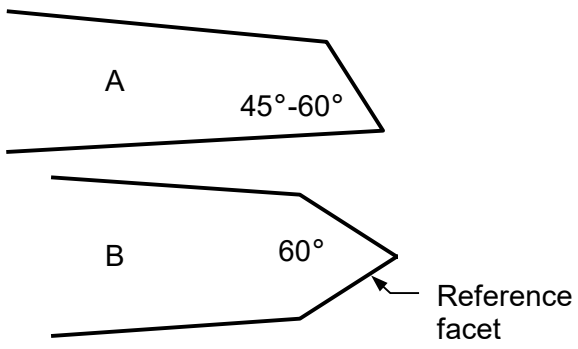

I use point A when shearing metal, cutting off rivets, etc. Point B is the traditional cold chisel point (a book from 100 years ago recommended a 70° point) and lets you control the cutting angle more easily than point A. Point B's reference facet is placed on the work's surface and slight tipping of the chisel controls the cutting angle.

Now that I've done this once in a significant chunk of steel, I feel more comfortable with this technique and I suspect I'd be able to do a similar job in easily half the time or less. I felt the following were important for successful chipping and filing:

- ♦ Make a clear and easy-to-see layout.
- ♦ Ensure you have good lighting so you can see things clearly.
- ♦ Use a vise to hold the work at the right height.
- ♦ When filing or chipping, you can see where you're taking off metal by coating the area with a felt pen.
- ♦ Use a gauge to size things so you know where to remove metal. I feel machinist's spring bow calipers are ideal for this task.
- ♦ Use the right type of file for the job.
- ♦ Remember filing is a finishing process, so don't plan to take off a lot of material with a file unless you want a lot more work.

After doing some chipping, you might find like I did that you started using your cold chisels for more tasks around the shop. For example, draw a cut line across a piece of 1/8" aluminum sheet metal, clamp the piece in the vise so the line just protrudes above the vise jaw, then use a hammer and cold chisel to make a shearing cut along the line. Hold the chisel's axis at an angle to the sheet metal and you'll be able to peel off a curved cut; it will look similar to cutting with a pair of scissors. And it's pretty fast.

Since filing and chipping were used a lot more a century ago, you can profitably search out some of the older shop books for tips and techniques (the following books can be found on Google books):

- ♦ Kaup, *Machine Shop Practice*, 2nd ed., Wiley, 1915.
- ♦ W. Leonard, *Machine-Shop Tools and Methods*, 5th ed., Wiley, 1908.

Filing

Filing is a finishing process, so it is not intended to remove a lot of material. You can, but it will take you quite a while -- and you'd be better off using another method like chipping.

One of my favorite files is an 8 inch pillar file that's 0.3 inches wide. I bought it used and someone ground off the maker's mark. This file has a rectangular cross section and only cuts on two surfaces (the cutting surfaces are red):

The most common flat file in my shop is the single cut file. I have one double cut file, but almost never use it. In my experience, I almost never use the narrow edge of a file, so I will sometimes grind or belt sand off the sides of these flat files, producing a file topologically similar to a pillar file. If you do this, be careful of overheating the file and destroying the hardness.

File handle: A file handle is quite important to be able to use the file safely and efficiently. Many years ago I read that someone jammed a dried corncob on a file as a handle. It's a surprisingly easy and effective technique, so next time you have some corn on the cob, save the cobs and dry them out. Better, make or buy some wooden handles shaped to fit your hand. [*tmbr3:107*] gives some dimensions for a file handle that will fit your hand well. A friend made me one on his wood lathe for me and it is an absolute pleasure to use. I keep it on a 12 inch Nicholson Magi-cut file, another favorite file.

You may wonder how people get file handles on those tapered tangs. I've usually just measured about half-way along the tang and drilled a hole that diameter, then pounded on a handle. However, unless you make a metal ferrule for the handle, you'll probably split a wood handle doing this. Instead, wrap a wet rag around the heel of the file to protect the hardening and use a torch to heat up the tang. Then drive the hot tang into the handle and it will make the wood conform better and the heat will help it stick in place.

Files are made from a high carbon steel and are hardened to nearly as hard as they can be and left in this state. This is so they cut harder materials and last a long time. But **they are brittle** because they're so hard. You can break off files fairly easy -- grab them in a vise, wrap a rag around the file, then smack it sideways with a hammer and it will break off.

A handy thing to do with a mill file is to grind and hone the flat end at the tip. This turns the file into a (flat) scraper and you can use it for scraping metals besides as a file. I have done this to scrape off dings on my lathe's bed and it works quite well.

Anneal the tang of a file with a propane torch. Protect the heat-treated teeth with a wet rag and heat the tang area up with the torch and let it cool. You'll then be able to drill a hole through the tang if it wasn't already soft (it will be tougher than low-carbon steel, but you will be able to drill it; use good lubrication for the drill). I did this so a small bolt could be used to clamp a strip of emery paper to both sides of the file.

Rotary tool cutting of a groove

My brother-in-law wanted to use a 1/8" shank cutter in his Dremel tool to cut a groove around a wooden fishing net he was making (he was using it like a router). He brought over a piece of 1/4" diameter nylon rod and was going to have me machine a spacer to fit over the 1/8" shaft so that it would rub against the work and control the depth of cut. I had some 1/4" diameter neodymium magnets on hand with a 1/8" hole through them; three of these magnets fit perfectly over the shaft and acted exactly in the way he wanted them to. They worked perfectly for this application and required no work to make. He was tickled.

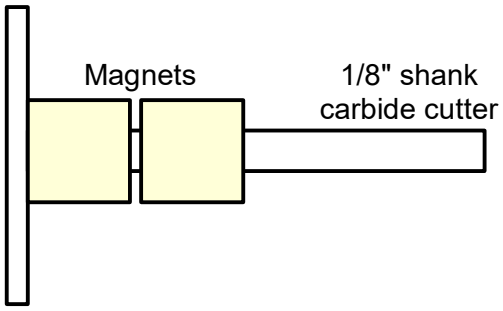

They rotated on the 1/8" shaft and acted as a bearing -- best of all, nothing had to be made.

Four-disk checking of a square

If you have a lathe, you can make a reference square.

Screw four identical disks to a board or metal plate with the screw holes a bit larger than the screw shanks. Adjust them until dimensions A and B are identical. Then the lines connecting the disk edges are perpendicular.

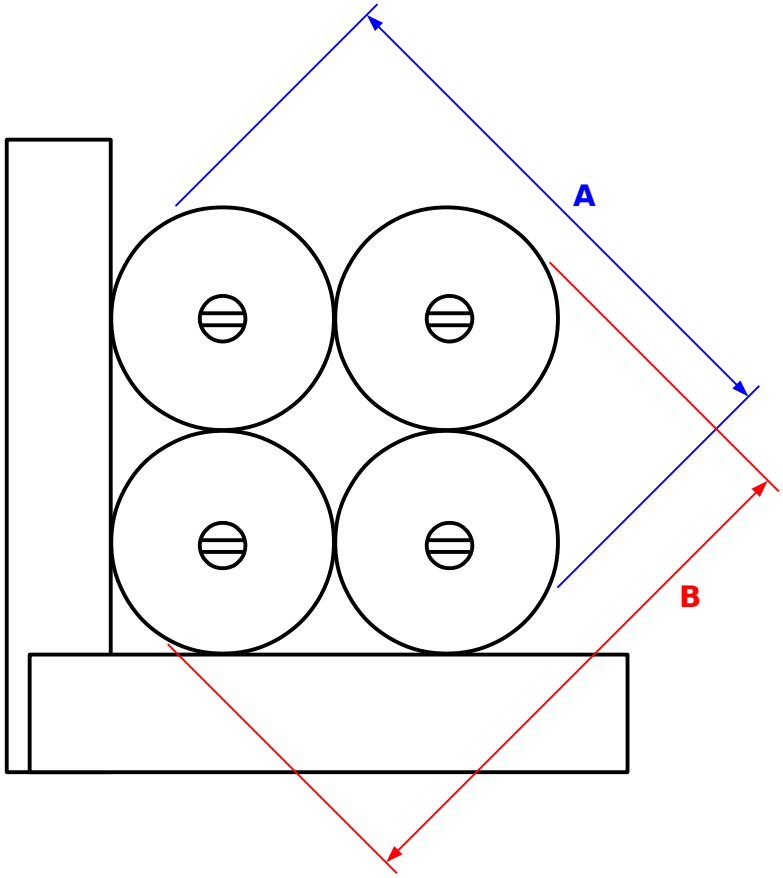

It's useful to estimate the errors. Suppose the geometry is

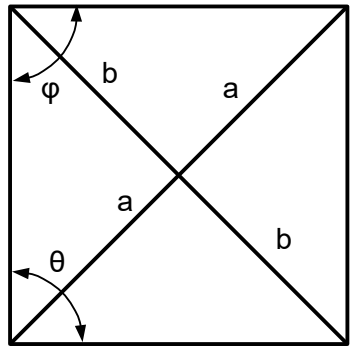

and $b = (1+\delta)\,a$ where δ is a small positive number. We have

$$\theta = 2\tan^{-1}\frac{b}{a} \approx 2\tan^{-1}(1+\delta)$$
$$\varphi = \tan^{-1}\frac{a}{b} \approx 2\tan^{-1}(1-\delta)$$

The Taylor series expansion for θ is

```
pi/2 + x - x**2/2 + x**3/6 - x**5/20 + O(x**6)
```

Since δ is small, we have that

$$\theta \approx \frac{\pi}{2} + \delta$$
$$\varphi \approx \frac{\pi}{2} - \delta$$

Hence, the difference between the two angles is 2δ in radians. Note δ is the slope of the small angle off a right angle.

As an example, suppose δ = 0.0001. Then the angle is off being a right angle by 0.2 mrad or 0.01°. For a square with a leg length of 6 inches, a dial indicator would show this leg being out by (6 in) (0.0001 radians) or 0.0006 inches over that 6 inch length. This puts it in the class of machinist's squares, as a typical spec for such a square is a slope of 0.0002.

Note this method only tests a square at two contact points on each side; it can't necessarily detect a bent blade.

High carbon steel

Having high carbon steel around the shop is useful because it can be fabricated in the annealed state, then hardened and tempered to make tools.

You can buy high carbon steel from vendors like MSC or McMaster-Carr, but it can be pretty expensive. For us home shop machinists with a small budget, you can often scrounge it from scrap or excess stuff you have on hand.

Gun-related vendors (Brownell's, Midway) sell packages of spring steel (e.g., Ajax #149, #150), but they can be $30 or more each. They're made from a 1070 high-carbon steel and are sold to gunsmiths to make custom springs. I bought a couple of packages a few decades ago and I'm still using them.

There are other sources of hardenable steel:

- Visit a scrap yard with a file and magnet; look for steel pieces which won't file. These may be a hardened steel which you can anneal and reuse.
- Allen wrenches are made from an alloy steel and can be hardened into useful tools after

machining.

- ♦ Concrete nails. Get the unplated kind; you'll probably want to anneal them to work them, then reharden/temper them. These make excellent punches.
- ♦ Spring steel strapping used to secure heavy loads (e.g., shipped by rail). Anneal, work, reharden. These might make nice little knife blades.
- ♦ Oil and water-hardening tool steels (sold as drill rod and ground flat stock).
- ♦ Auto scrap yards can provide suspension springs, which can be a good source of flat stock.
- ♦ Furniture can have steel springs in it that can be salvaged.
- ♦ Sockets and extensions are made from a tough chrome-vanadium steel and can be fashioned into useful tools. I've turned some CrV sockets on the lathe that machined beautifully.

For low-carbon steels, if you can heat the piece, you can use commercial preparations like Kasenit to put on a hardened case. This involves dipping the steel in the Kasenit powder while the work is hot so some powder sticks to the surface, then taking it to a red heat where a magnet is no longer attracted to the steel (the Curie temperature), holding it there for a reasonable amount of time for the carbon to diffuse into the steel, then plunging the steel into oil, brine, or water to quench it. If you're using acetylene, use a slightly acetylene-rich flame to avoid introducing any oxygen (you get an acetylene-rich flame by making the bright blue inner cone have a "feather").

To anneal a hardened steel, bring it to a red heat, then cool it as slowly as possible by e.g. covering it with ashes. To avoid scale, you can dip it in powdered boric acid or a brazing flux like Brazo and the melted flux will protect the surface from oxidation. Small pieces can sometimes be annealed enough to file and drill by letting them air cool. For example, to drill a hole in a file near the tang, wrap it with a wet cloth to protect the file's teeth and heat it with a propane torch until it's as hot as you can get it, then let it air cool. Once cool, you should be able to drill a hole in the file, although it will be tougher than a low-carbon steel.

If you have a bunch of annealing and hardening to do, you might want to look into building a suitable electrical furnace. These can be set up with controls to allow slow cooling rates for annealing and complicated heat treating profiles.

Fence gate hinge pins

My wife and I made a fence from salvaged materials; one of the fence panels we had given to us contained the hardware for a gate. The hinge pins were missing, so we used some 5/8" diameter concrete anchors that were 10 inches long. The thread on the anchors didn't extend far enough on the shank, so I wanted to use what I think is the simplest solution: a retaining ring. However, when I got the parts into the shop, though the thread is 5/8 inches, the unthreaded shanks were undersize and not large enough to take a 5/8" retaining ring. Sadly, the next smaller retaining ring size, 9/16, would fit through the 5/8" washers, so wouldn't work.

The other two obvious solutions were 1) a pin, such as a Cotter pin or spring pin or 2) weld on a collar. I didn't want to weld, as it would mean damaging a substantial amount of the galvanizing by the heat from the torch. I also don't like a cross hole for a pin as much as the retaining ring because the hole weakens the hinge pin. But I had no choice. I had some 4 mm diameter spring pins which I had salvaged and drilled a 5/32" hole for them. I cleaned them and the hinge pin off and sprayed the exposed metal with Krylon acrylic spray to protect a bit from rust.

I drilled the 5/8" holes in the fence posts to position the gate where I wanted it. I mounted the gate hardware and adjusted things to make the gate hardware level and of equal height (adjusted dimension P in the following figure). I marked each hinge pin's location and how much it needed to extend from the gate post. Here's a sketch:

The parts are:

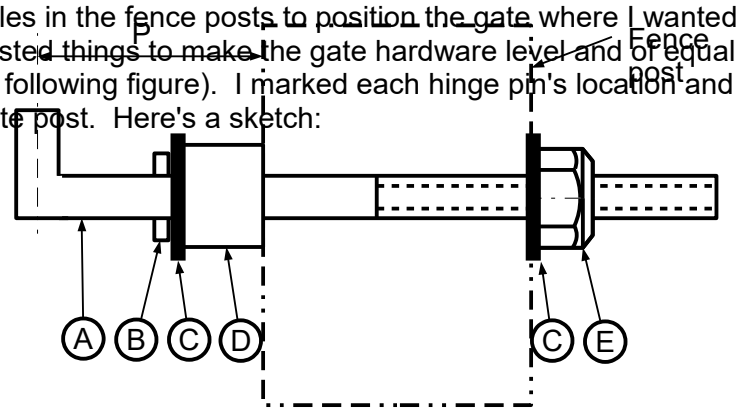

A 5/8-11 UNC concrete anchor, 10" long
B 4 mm diameter spring pin
C 5/8 washer
D Spacer from 1" diameter aluminum bar stock
E Nut

The spacer D let me fine-tune the mounting after all the parts were made if the posts changed position over time or the assembly sags somewhat.

I made four spacers D; the nominal length was 1 inch. However, I made them 1.3" long to start with, then trimmed them to size after checking the installation. This let me get the exact spacing needed for the gate hardware.

Find the center of a workpiece

There are a variety of ways to do this.

Eyeball: For thin work, your brain is good at halving distances. Mark it with a pencil or scribe and go.

Half-scale rule: If you have a drafting scale with full and half scales, measure the width with the full scale and mark the same number using the half scale. This removes the possibility of an arithmetic error. A properly-designed two-sided draftsman's rule has the full scale on one side and the half scale on the other, gotten by quickly flipping the rule. The drafting scales for drafting machines often have full and half scales, but you have to turn them around to use the other scale unless they're marked with numbers in both directions.

Center-zero rules: These are specialty rules that have a zero mark in the center of the rule. Set the rule on the work so that the reading is the same on both sides; then the zero mark on the rule marks the center of the work. I think they're more trouble than they're worth.

Arithmetic: The most obvious one is to measure the width, divide by 2, and mark the half-way point. It works on all cross-sectional shapes. Two potential problems with this method are 1) arithmetic errors and 2) reading the wrong point on the rule.

Approximate by center of gravity: For e.g. a board with uniform cross-section and mass per unit length that you can balance on your hands or fingers, slowly bring the hands/fingers together; the board should stay balanced on your hands. When your hands are together, you can interpolate the midpoint. Use this to find approximate center, then e.g. measure from one edge to this mark with a tape measure. Measure the same distance from the other side and mark the midpoint between the two marks.

Draftsman's method: Tilt a rule or tape measure until an odd number of divisions fit across the width; then mark the center at the middle division. Be careful when doing this with a wide tape measure for precise work, as the hook might not quite index at the edge of the scale. You can do a similar thing with a straightedge and dividers, so you don't absolutely need a rule. Be careful of making a counting error.

Scribe with calipers: For smaller dimensions, electronic, dial, or vernier calipers can be used to scribe the center mark if they have sharp tips (this is a fast and practical method, but it can lead to wear of the jaw tips). Measure the width, divide it by 2, and set this dimension on the calipers and lock the movable portion. Then scribe from the edge. To reduce errors, scribe from both edges and pick the midpoint between the scribed lines.

Hermaphrodite calipers or marking gauge: set the calipers or gauge to about the half-width and scribe marks from both edges (for finer work, just make a slight indentation with the pin). The center is half-way between these two marks. It's fast, precise, and nearly error-free. Works on circles too -- I virtually always use hermaphrodite calipers for locating centers for lathe work because they're handy and the center head often isn't on a blade. If you have a drafting compass, make a small bent leg from e.g. 1/8" welding rod; this turns the compass into hermaphrodite calipers. You can also use dividers if that's all you have, but it's harder to locate precisely from the edge. My favorite calipers

for this task for general work are 8 inch old-style model 42 Starrett hermaphrodite calipers; for metal working tasks, I like Lufkin firm joint hermaphrodite calipers with straight legs and a pin.

Center head: If the piece is rectangular or round, use the center head attachment on a combination square to scribe bisectors of the end angles or diameters. They meet in the center of that width or circle. No calculations or readings are necessary. But this method is somewhat slow unless you have a spare blade for the center head -- you have to go to your toolbox, install the head on the rule, then remove it when you're done.

If you don't have a center head attachment and you're trying to find the center of a rectangular board wider than the combination square's rule, draw a perpendicular to both sides, then use the square's head to mark a 45 degree line that intersects this perpendicular at each edge. Extend these angled lines until they meet to find the center. Since the 45 degree portion of the square's head isn't very long, this isn't a terribly accurate method.

Combination or double square: Set the beam of a combination or double square to about the half-width and scribe marks from both sides (don't change the setting between making the two marks). The center is half-way between these two marks, which you can judge by eye.

> Another way with the combination square is to scribe a line across the board, then draw 45° lines that intersect this line with each edge of the board. The intersection of the 45° lines marks the center. But I feel this is an inferior method, especially when the board has radiused edges like on 2 by material -- this is because it's hard to locate the edge. More importantly, the above method of marking from both sides of the board is fast and works well even with radiused edges.

Angle square: For rough carpentry, the angle square (also called a speed square or rafter square) is handy. Use a triangular file to make some notches on the side for your pencil so you can mark the centerline of standard lumber widths. Some angle squares come with notches already made (these are useful to e.g. scribe pencil lines in 1/8 inch increments from the board's edge).

Pencil with finger fence: A rough carpentry method is to hold the pencil a fixed distance from the edge of the board using your finger as a fence and scribe a line. Repeat on the other side without changing your hold on the pencil and pick out the center point. This is about the fastest method of all, requires no tools, and it's practical. Its disadvantages are that it only works for small widths within the reach of your fingers & pencil and it's not hard to make a mistake.

Make a stick with a hole in one end that's a tight fit for a pencil. Grab the stick so that your finger makes a fence, adjust so the pencil is about at the center, then scribe from both sides. Cheap, simple, fast.

Diagonals: If the workpiece is rectangular and you have a straightedge long enough, draw the two diagonals; their intersection is the center between both sides. I keep a 3 foot long piece of 1/16" by 1" wide ground flat stock in my shop for such a straightedge. I bought it for some forgotten project years ago that I never pursued and found that it's a great straightedge -- it's flat and the sides are parallel to less than 0.0005 inches measured on a surface plate. And I only paid $9 for it (how can I remember this and not remember where I set my glasses down?). This can give you a straightedge that is a fraction of the cost of the commercial offerings and has better specs.

If the sides aren't parallel, first draw some lines that are approximately perpendicular to the centerline and use the same technique from where the perpendicular line intersects the sides:

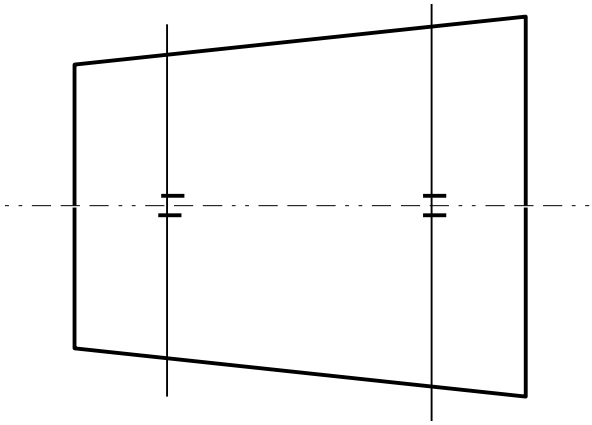

Rip in half: To rip a board with parallel edges in half on the table saw or band saw: measure the board's width and set the fence to the half-width minus half the blade width. Just nick the end of the board with the blade; flip the board over by its long axis and nick the end again (in both cases indexed against the fence). Use a square to determine if the edges of the nicks line up; if not, adjust the fence and try again. Use e.g. a Sharpie to color over the existing nicks so you can see the new ones. When they match, the board will be cut in half.

Centering tool: If you have to do a bunch of this, you can make a quickie tool that finds the center of a board. Set your dividers to a distance *x* and draw a line across a stick. Mark a center point at A and use dividers to scribe two points a distance *x* from the center point. Pound nails through the marked points as shown (you may want to center punch the marks and drill pilot holes):

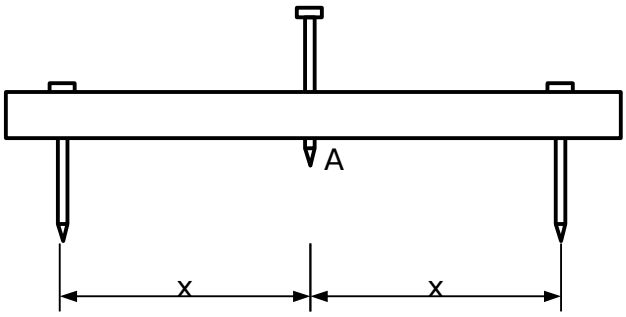

File or clip off the points of the outside nails. Put the two outside nails firmly against the board's edges by rotating the gauge and the center nail can be tapped to mark the board's center. While I've made a number of these over the years, I end up throwing them out because they don't work at a thin board's end and hermaphrodite calipers are nearly as fast and more compact.

Avoiding scale when hardening steel

When hardening steel, an easy way to protect against scale is to heat the steel up just enough (say, a bit of an oxide color forming on it), then dip it in something like Brazo flux, which is a mix of borax and boric acid. Then heat to cherry red; the borax will melt and keep the steel covered (you'll see a green color in the flame, typical of a borax compound). When you quench in water, the hot flux will crack off and you'll be left with a surprisingly clean surface. Beats doing a lot of sanding or soaking in salt/vinegar.

[*gk2:271*] recommends boric acid (H_3BO_2). I tried it (my wife uses it to kill ants) and it worked fine too -- I couldn't tell the difference from using Brazo flux.

Some folks recommend a finely powdered soap like Ivory. This has the advantage of being cheap and readily available, but I've found it somewhat difficult to get the dry soap to stick to the work. Perhaps adding a drop of water to the soap could help it stick better; where I did get it to stick, it gave useful protection to the steel.

Bending wire into circles

When I need to bend a wire in a small circle, I usually use a socket as a form to bend around. Since I have hundreds of sockets, I have quite a few different sizes available (up to 2.6 inches in diameter). I recently spent the time measuring the diameter and length of each socket, so now it's straightforward to find a suitable size for bending circles (and using the length as a spacer).

The method is to put the socket into the vise, put the wire between the vise jaw and the socket, then wrap the wire around the socket, with my fingers if possible or with pliers for heavier/stiffer wires. For heavy wires, winding in a lathe like you do springs could be a better way, especially for folks who have arthritis in their hands.

To get a desired size, you need to account for spring-back. For soft copper, brass, aluminum and steel wires, I'll estimate the spring-back by about 5 to 8 percent. This percentage is the amount of the desired finished size to subtract to get the socket size to use. You'll need to find it empirically for heat treated wire like piano wire, as the spring-back can be much larger.

For larger hoops, you're probably better off to make a three-disk rolling fixture (see [*tmbr3:56*]).

Deburring inside of a hole

I drilled some holes in a steel electrical box to mount them to a board for a project. Deburring the outside of the holes was simple, but I couldn't get any tool to deburr the inside and there were internal obstructions (the partially-punched knockouts) which wouldn't let me use a file or scraper. Attachments are made for rotary deburring handles for deburring the opposite side of a hole, but I don't have one. Instead, I grabbed a 1/4" wide cold chisel and knocked the burrs off quickly. I keep this particular chisel ground to the following shape:

It turned out to be the perfect tool for the job; I used it to shave off the burrs with the chisel parallel to the metal's surface.

BTW, that shape is intended to be used for shearing things off flush to a surface. Put some sheet metal in some vise jaws and you can use it to shear off a quick cut in the metal surprisingly quickly.

Valve job

I'd never done a valve job on an engine until our lawn mower's Briggs & Stratton 13 hp engine needed to be serviced in the summer of 2015 (this motor has been in use for about 20 years). Starting kept getting harder and harder every year, although the engine ran pretty well once it was running. It didn't smoke when running, leading me to believe that the rings were in decent shape and the valves were causing the problem. I decided I'd take the head off and inspect things, since I was having to disassemble the mower anyway to fix a drive problem. This is a log of some of the things I learned.

Disassembly to get where I could remove the head was uneventful; this required removing some covers, the carburetor, and the exhaust muffler. I took pictures of what I could to help me with reassembly, as I have learned from experience that you will <u>not</u> remember all the details -- something will delay the reassembly (in this case, it was waiting about a week for a special tool to show up) and the pictures are then worth their weight in gold, especially when you have no documentation on the engine (I had none except for the parts list). You think you'll remember all those details, but you won't.

Before removing the head, I did a compression test by hooking up my 1/2 inch electric drill and turning the flywheel with it as fast as it would go. I got a reading of 20 psi; accuracy of the gauge is

unknown. Briggs & Stratton doesn't specify the compression test specs for their engines because it's a measurement-method dependent and there can be compression release hardware complicating the measurement. Instead, they recommend you spin the flywheel backwards and see if there's a sharp stop when the piston reaches near top dead center (it can take up to 2 rotations to find this point on a 4-cycle engine). This engine definitely didn't have this point, as I could rotate it through this point easily with one hand.

Penetrant on head bolts

I was worried about having the head bolts stick or break off, causing head damage (my brother-in-law had this happen to a small engine he was working on and he had to scrap the engine).

To minimize the chances of this, I squirted Liquid Wrench (kerosene and mineral oil) onto each bolt head. But these long bolts are horizontal and there was no easy way to soak the bolts' threads overnight in penetrant.

I took half of a Kleenex tissue and folded it lengthwise a couple of times. I wrapped this around each bolt head and secured it with a small tie wrap. Each Kleenex then got saturated with Liquid Wrench and sat overnight. The top 4 bolts were tapped through, so I was also able to reach them with some penetrant from the back side. At 7 am the next morning I saturated each Kleenex with automatic transmission fluid. At noon, I used a breaker bar and socket to loosen the bolts and they all loosened easily and consistently. It was gratifying to not have anything stick or gall the threads in the aluminum block's tapped holes. A broken head bolt or damaged threads would seriously increase the amount of time and effort this project required and might make it uneconomical to fix the damage.

Head removal

Removing the head showed the piston and two valves; the engine design is called an L-head engine because of its shape and location of the valves. Initial inspection showed:

- ♦ The head and top of the piston looked fine except for carbon deposits that were scraped off with a plastic scraper; the remainder came off with carb cleaner.
- ♦ The cylinder walls are not badly scored (a few fine scratches) and I consider them to be in good shape. This engine's cylinder has a steel lining; cheaper engines don't use a lining.
- ♦ The valves were in bad shape, both the valve seats and valves. It looked like there was enough material for regrinding and the seats should lap OK once the valves are ground.

I decided I would fix the valve problem and put the engine back together without changing anything else. Putting in new rings would be much more work because I'd have to remove the engine from the mower, disassemble it, and probably have the block bored out. My hope was that the valve job will improve things enough to get a few more mowing seasons from the engine.

The first mechanical challenge was to remove the valve springs. I tried a couple of shop-built tools to do this, but they didn't work. Then I bought a $23 tool on ebay to do the job. When it arrived, it was straightforward to remove the valve springs.

Once the valves were out, the crud on them cleaned up easily with a wire brush and some carb cleaner.

The next challenge was to find out the angle that the valves should be refinished at. Some web research and measurements indicated 45° for the exhaust valve and 30° for the intake valve, but I never was able to find any specs for this engine, so I had to wing it. I used some triangles I have to check the angles on the valves and the above numbers did look correct.

The valves were held in a collet on my lathe and it only took a few moments to turn the sealing surface with a new carbide insert; I removed the minimum amount of material to finish the whole surface and there's enough material left to do at least one more valve job, probably two.

The valves were put back into the engine with some coarse Clover grinding compound and turned by hand to lap the valve seats; this was followed by some fine grinding compound. After things were

inspected, I cleaned off all traces of grit from the valves and valve seat area.

The valve guides didn't look worn and the valve stems fit in them snugly. I decided it was time to reassemble the engine and try it out. I got the head bolt torque specs from a set of engines with similar model numbers and calibrated my torque wrench to this value. I put the head on and squirted a little oil on the head bolt threads with the intent of reducing sticking in the future, although this can reduce the torque requirements. Nevertheless, I torqued the 9 head bolts in a crossing pattern in three torque steps: 75, 150, and 225 in-lb. If I do this again the same way, I'll drop the torque to 150 in-lb because of the way things felt to me.

Another compression check showed 42 psi, so **the valve job doubled the compression**. This was a good sign.

The engine was reassembled and I started it up with a shot of starting fluid. It started after some cranking to get gas to the engine. It started a bit easier than in the past, but later use showed me it still doesn't have proper starting characteristics. The next task would be to rebuild the carburetor, but a carburetor rebuild kit isn't cheap. I'll do it if the starting problems get worse (now the mower is usable, as I've used it for a couple of months without problems since fixing it).

The total cost of this fix was $9 for a head gasket and $23 for the valve compressor tool.

> Two of my maxims during this fix-it effort was "do no harm" and "if it ain't broke, don't fix it". I decided that I'd remove the carburetor intact, clean the dirt off the outside, and put it back on with no other work. The temptation was strong to rebuild the carburetor, but this was quenched by finding out that a silly little rebuild kit of a few simple parts and two gaskets would cost $75. I run the engine out of gas at the end of every year, so there should be little varnish in the carburetor. Excluding any seals/rubber that have degraded with time, this was a good decision. I'll fix it only when it needs fixing.

Update May 2018: I got a few more seasons of use from this mower, as anticipated. In April of 2018, we bought a used Hustler mower from a guy who cuts lawns for a living; he maintained the thing well and our cost was about half of a new one. I gave the old mower to a relative who uses it to cut his smaller lawn.

Layout tip

When laying out things on metal, I've found the following method avoids coating the whole surface in layout dye when I just want a few holes/lines. Lay out the desired lines/distances with a sharp pencil; this is done approximately. These pencil lines can be erased by either rubbing with a finger, an eraser, or a paper towel dipped in acetone.

Where the hole locations are to be, use a blue Sharpie pen to make a small filled circle. Then use your layout tools to make some fine layout marks. The marks will stand out against the Sharpie blue color for subsequent cutting. The Sharpie marks are easily removed with alcohol or acetone when you're finished.

Countersinking

There are only two countersinks I'll use under power: the Weldon style and a single-flute countersink. These have the least probability of chattering. These countersinks also work well on a push-drill for countersinking a bunch of holes (this can be faster than using an electric drill because the push-drill is easier to position).

A multi-flute countersink is fine on a handle for manual deburring, but I virtually never remember one not chattering in a machine.

Hot melt glue

One of the plastic tips on the adjusting rods for our Venetian blinds failed, so I made a new tip from brass. It was bored to 0.245 inches in diameter, filed to shape, and fit over a round tenon of 0.241" diameter on the wood shaft. My wife squirted some hot melt glue on the wooden tenon tip, then I quickly twisted on the brass piece. It cooled off quickly and I was left with a nice fit:

You can see the bead of excess glue that got squeezed out; I trimmed it off with a knife. I used a black Sharpie marker to coat the brass and, once installed, you can't tell it from the adjusters on the other window blinds.

For a little more working time, heat the brass piece before installing (hold it with gloves).

If you can assemble a joint quickly and thoroughly coat it with glue, using hot melt glue is an excellent solution because it cools quickly and you'll have a working part in short order.

My brother suggests using a propane torch and a stick of glue when you don't have time to wait for a glue gun to heat up.

White electrical tape

Get a roll of white vinyl electrical tape and use it for impromptu labels in the shop with a Sharpie pen.

Dennison makes a label for 3.5 inch floppy disks that has an adhesive that lets you removed the label later. These make nice labels for shop stuff because you can remove and replace them easily later. A sheet of them will go through your printer.

I also use orange vinyl electrical tape a lot. It is quite visible, yet I can still write on it with a felt pen and read the writing (unlike black electrical tape).

Make a custom-size reamer

Center drills are fine for the lathe, but they're a pain in the drill press or mill because they're so short (a 1/4 inch jobber drill is 4 inches long, so you have to extend the spindle about 3 inches to center drill first). A fix is to make an extender for the center drill.

I use a 1/4 inch diameter center drill on the drill press. One end was munged up by somebody, so I didn't mind making an extender and pressing the center drill into a "reamed" hole as a press fit:

The catch was that this center drill's shank measured 0.2495 inches in diameter, meaning I couldn't just use a standard 1/4 inch reamer. I don't have a 0.249 inch diameter reamer, nor would I buy one for a single task. I could have bored the hole, but I chose instead to make a reamer from a 1/4 inch drill because I have a can full of those.

I ground off the drill's periphery on the grinder by hand for all but about the first 0.2 inches of the drill:

The outside of the drill was a black oxide, so it was easy to see if I missed any spots. Next time, however, I'll just stone the diameter, as I only wanted to remove 0.001 inches.

I next chucked this drill bit in a collet in the lathe and used my small diamond "stones" (diamond powder bonded to a chunk of sheet steel) to grind down the drill's tip to 0.249 inches in diameter. I

did this with the coarse stone (about 325 grit) until I was a few tenths (0.0001 inches) from 0.249. Then I used the medium stone (600 grit) to finish things up. It measured 0.2490 inches with my micrometer, which I checked with a 1/4 inch gauge block before starting.

I drilled the hole with a D-size drill (0.246" diameter), then followed it with this "reamer" and a squirt of oil. I definitely got a small chip from the drill. After cleaning up the hole's burr, I couldn't get a 0.249" plus gauge pin in the hole, but the 0.248" pin fit.

To get the final fit, I put a lever under the drill and judiciously pried things a bit:

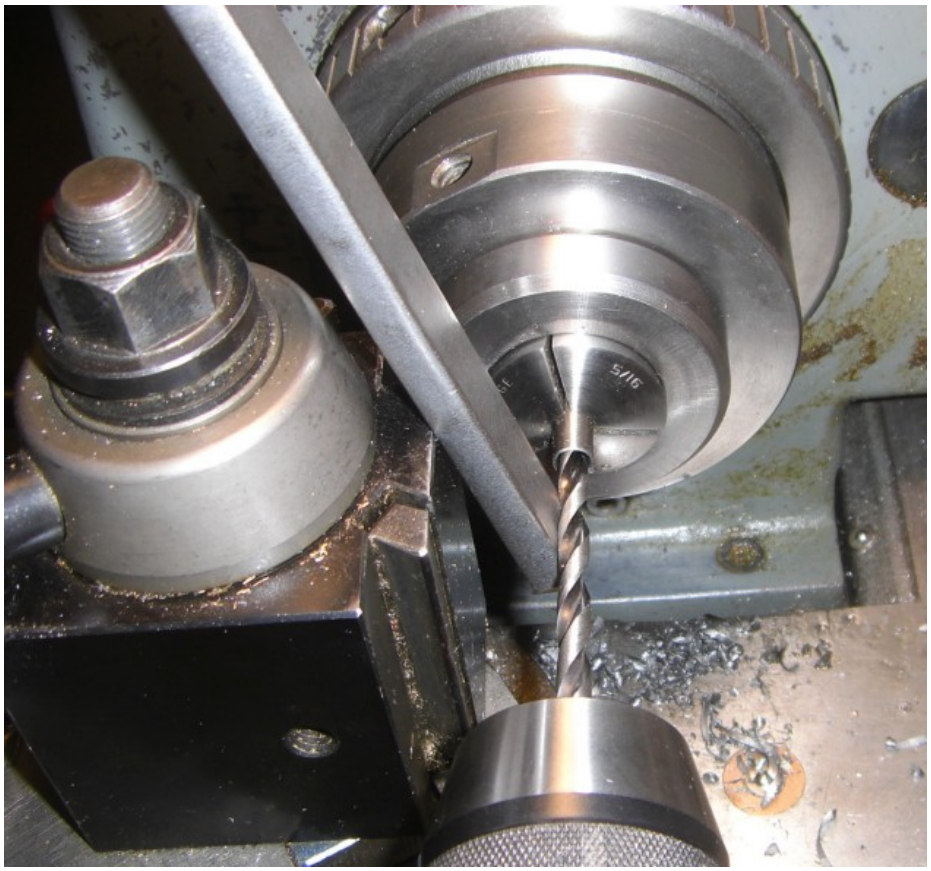

After this was done, the 0.249" gauge pin just was able to be pushed into the hole with a fair bit of force. As the micrometer measured the gauge pin 1 tenth under 0.249" (even though it's a + gauge pin), I knew I was within the desired 0.249" diameter by about a tenth of a mil.

I couldn't push the center drill into the hole, but I easily pounded the shank onto the drill with a hammer (I rested the 60° portion against my brass vise jaws). Now I've got an extended center drill and a new method in my set of shop techniques.

I'll agree if you criticize this technique as producing a cutter with little to no clearance behind the cutting edge. I rationalized this as OK because it would also burnish the hole to size (which is why you want to use it with oil). While I wouldn't want to do production drilling with this drill, it's OK for removing a few thousandths of an inch. And it's hard to argue with success.

I put a chunk of white tape around the shank labeled with 0.249" and put it in my drawer of reamers for the next time I need it.

The impetus for this technique was the rather common knowledge that you can drill holes with regular twist drills rather accurately to size by using the next smaller drill to remove most of the material, then follow up with the finish-size drill. Stone a slight radius where the cutting edge meets the side of the drill and you'll have a cheap near-reamer (this tip comes from [*tmbr*] I believe).

Another option is to silver-solder or weld the drill in the hole -- but I was experimenting and wanted to find out if I could make a reasonable interference fit by drilling.

Update a few years later: this center drill eventually wound up spinning in its hole, so it wasn't a tight enough fit. I now make these by silver-soldering the drill into a chunk of steel with a few different shank sizes (made from a used automobile head bolt) so they can be grabbed in the collet that's handy in the mill.

Setting a lathe tool

In using a lathe, the usual first operation is to set the cross-slide's dial to zero when the cutting tool just touches the work. Here are some ways of doing this.

The easiest is to use a felt pen to put on a thin band of color on the work, then crank the cross slide until you just see the tool touch the work while it's turning (I use a blue felt pen, as this gives good contrast with the bright metal cut). This is what I use 99% of the time because it's fast, easy, and I always have a blue Sharpie pen on my lathe's tool tray or in my pocket. If you're gentle with the cross-slide feed, you'll also get an indication of how much the work is not concentric with the axis of rotation by seeing where the tool didn't cut. I usually set the dial to indicate a cut depth of 1 to 2 mils after making a light groove.

An old method is to use a cigarette paper and feel for when you start to get drag between the tool and the work (the cigarette paper is about 0.001 inches thick). But you can use any scrap paper from around the house and measure its thickness.

For more careful work, get a feeler gauge of known thickness δ and put it between the tool and the work. Touch the tool gently to the feeler gauge pressed up against the work. Then set the cross-feed dial to 2δ before zero; bringing it to zero should then just have the tip of the tool touch the work. Since I keep a flexible rule on a magnet on the tailstock, I can use the rule for this service when necessary.

Filing three flats on a tool shank

Putting three flats on a tool's shank makes it easier to grip the tool in the typical three-jaw chuck of a drill press or hand-held drill -- but **you want to do this accurately so the tool runs concentrically**. The best way is probably to grab it in a collet and put it in a spin-index fixture or hex collet block and mill the flats. But most folks won't have such tools handy.

You can just estimate where the three flats will be and file or grind things by eye. This isn't recommended, however, because you'll probably be off a bit and the tool won't run concentrically -- and why ruin a good tool? The difficulty is caused by there not being much circumference on the shank to help with lay out.

If you have a lathe, you can make a simple filing fixture to do this work. Alternatively, turn down the shank a bit and silver-solder on a suitable chunk of hex stock.

Here's a method to do the job with simple tools found in most shops. This uses a chunk of scrap wood to "extend" the diameter of the shank. We'll lay out the cut on the wood and clamp the wood to the tool shank.

Get a roughly square piece of wood of 2 to 3 inches on a side. Make a small center punch mark at the geometrical center. Using a compass or dividers, scribe a circle around this punch mark. Then, without changing the compass setting, scribe the 120° marks (put your compass point at A, scribe mark B; move compass point to B and scribe mark C, etc.):

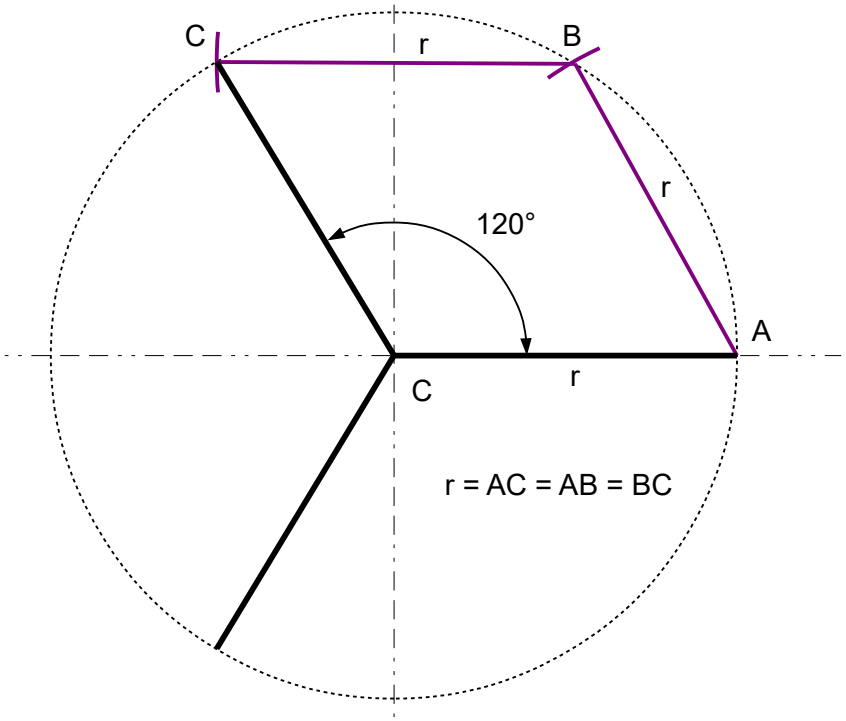

Measure the shank diameter and drill a through hole at C in the block of wood so that the shank will be a tight fit. If you can't get a tight enough fit, split the wood with a hack saw and insert a wood screw to clamp it to the bit. This block is clamped to the work and is used to guide you in filing the three flats.

I first tried this technique on an old Sears expansion wood-boring bit with an oddball 0.4 inch diameter shank. Here's the layout on a scrap chunk of 2x4:

I just jabbed the 4 inch divider's point into the wood to create the circle center[5], then scribed a circle that used up most of the board's width. I jabbed a mark at the 0° point, then stepped off the other points. The pencil lines were drawn with a dull pencil and a rule -- nothing fancy.

Clamp this wood block to the shank and hold the shank in the vise. The wood block is used to help index the tool's shank for filing, so try not to bump it -- you don't want the work rotating in the wood

5 This is why I like Fay-style dividers, as they can stand up to such use.

block and messing up the job. Using a square, orient the shank so that one of the lines is vertical to a reference direction[6] (I used the vise body). Use a file held level to file the first flat (you can set a small level on the file to help you align it if necessary). Repeat for the other two flats. Note you don't need to remove a lot of material, so this filing should go relatively quickly. Here's the orientation step just before filing the first flat:

I used my favorite file, a 12 inch Nicholson Magicut file and gave the shank 20 strokes. The block of wood was positioned to limit the length of the filed flats. The expansion bit was held in a machinist's parallel clamp which in turn was held in the bench vise:

I loosened the parallel clamp's clamping screw, rotated the expansion bit shank, and tightened the screw to position the next flat position. It takes longer to describe than to do it.

I used my eye while filing to estimate if I was tipping the file: if the width of the flat was greater at one end than the other, I adjusted my strokes until they were even. Here's a picture showing the final result:

6 Another method is to hang a weight on a string behind the work and let it act as a plumb bob to align the pencil lines to.

It almost looks like it was machined, but it was just done with a file held horizontally by eye. Even if you round the "flat" a bit, it's not terribly important, as the 3-jaw chuck will still hold things well (but the center of rotation might not be coincident with the center of the shank, which is why you want to do things evenly -- and why I counted the file strokes). The bit worked nicely when chucked in my electric drill. I've used this bit in the drill press to bore holes up to 2.5 inches in diameter.

If you wanted to do a lot of this type of filing, it could be worth your time to make up a chunk of wood with a center hole sized to take a particular dowel size. Then you'd drill chunks of dowel and split them to handle different sizes of shanks:

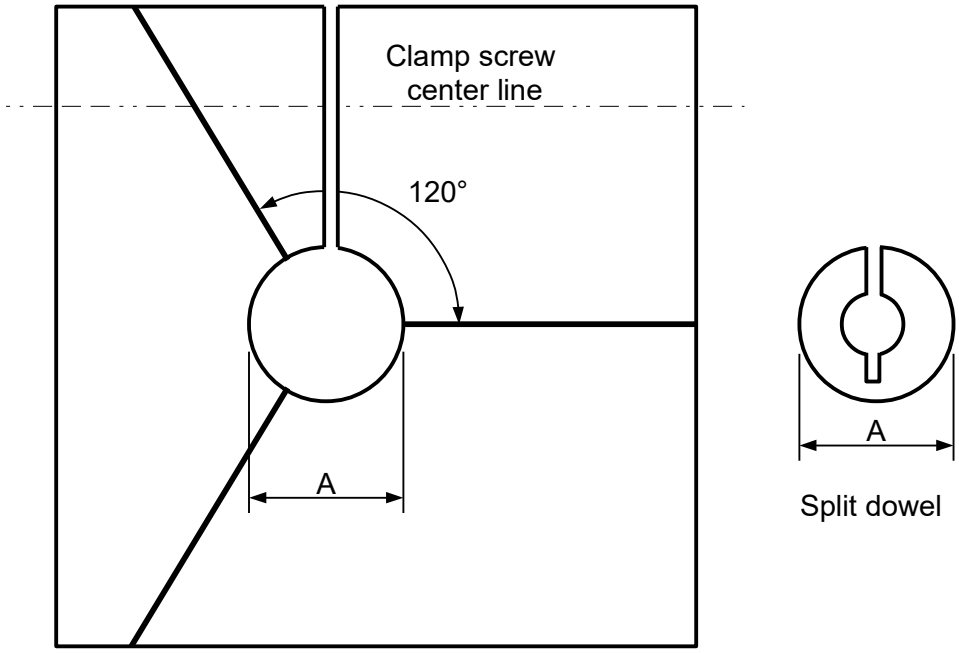

Split the dowels with a bandsaw, hacksaw, or jeweler's saw.

Plastic work-holders for lathe

Plastic bar stock and pipe can provide useful work holders that emulate collets. I needed to turn a knurled aluminum shaft that was 1.01 inches in diameter and I had a 4-jaw chuck in the lathe. I grabbed a chunk of 1 inch PVC schedule 80 pipe (1.315 inch OD, 0.96 inch ID) and centered it in the 4-jaw. I bored it out to 1.05 inches and made it the length of the chuck's jaws (1.5 inches). The last step was to cut it longitudinally on the bandsaw to turn it into a "collet". This worked perfectly to

hold the knurled material and took very little time to make. If you keep a few chunks of this material at hand to make a special holder when you need it, you'll slowly collect a bag of useful collets. Mark the ID on the outside of the piece.

Here's the basic design:

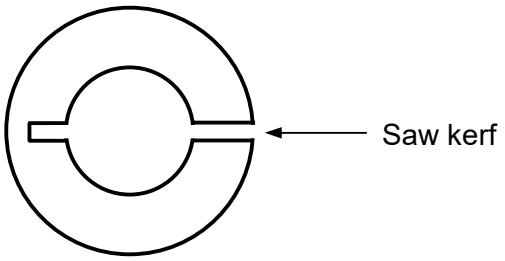

You can also make these work-holders from metal. If you thread them, they are useful to hold threaded parts (tap them before cutting the saw kerf). I often make such thread holders from 3/4 inch hex stock and insert it into a hex collet.

If you cut them in half, you can also use them to protect things being clamped in vee blocks from the vee block screws.

Driving nails in tough materials

I haven't tried this yet, but it may be worth making some of these if you have a lathe.

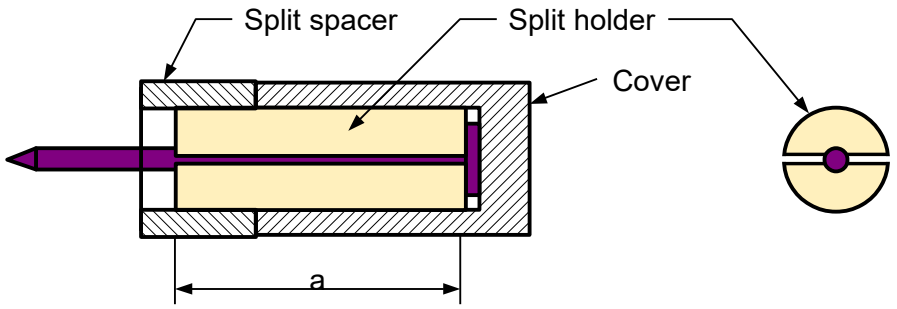

The idea is that the split holder's length *a* is long enough to prevent the nail from bending while you start pounding it in. You'd make up different lengths and diameters to handle different nails. Pound on the end of the cover to start the nail straight. Note the split holders are longer than the holder; this lets you hold things together with your fingers while starting the nail. The split holder is a free sliding fit inside the cover.

The split spacer is optional; it's a piece of tubing cut in half and held in place with e.g. a rubber band. The idea is to stop things from being pounded in to far so that the split holders are difficult to remove. If you pounded the nail down so that the split spacer pieces were tightly clamped, you probably could remove them by using a starter punch and knocking them from the side.

Such a device might help with pounding larger nails into tough hardwoods or pounding concrete nails in. Of course, this tool will also slow you down a lot -- but so can a bent nail, especially in a tough material. You'd pound things in and remove the split holder before the nail was deep enough to capture it.

Note: rather than make this specialized tool, it probably makes more sense to drill a pilot hole for the nail if you can. I can't ever remember bending a nail when I've drilled a good pilot hole for it.

Drilling cross holes in round stock

A common shop task is to drill cross holes in round stock. If you wing it and just center punch things

by eye, you can end up with a hole whose axis doesn't intersect the stock's axis. This looks ugly and amateurish -- and the intended application may not work.

There are a number of methods and tools to help you mark the center. You can make a fixture. Various places sell a pivoting vee tool that can help tell you when a spindle is directly over the top of a round bar. Using a milling machine and a center finder can let you center things nearly exactly. The mill has the rigid spindle to do a nice job of drilling too.

If you've used a milling machine, you've probably figured out a technique to just kiss the top of the work with an end mill to make a thin flat. The perpendicular bisector of the center of that flat intersects the bar's longitudinal axis, assuming the bar's cross section is a circle and the long axis is horizontal. Stick a tool with a sharp point into the spindle and center it by eye over the flat. If you've got a mill, then you can use a center finder to put the spindle over the cylinder's center (this is probably the most accurate method).

Use the same technique on a drill press by filing a flat. Clamp the work in a vise or vee block, then use a small file and hold it level to file the flat. Center punch at the center of the flat. It takes longer to write about than do. I gauge approximate level by eye. This works well for everything except precision stuff, as your eye can split a small distance quite well.

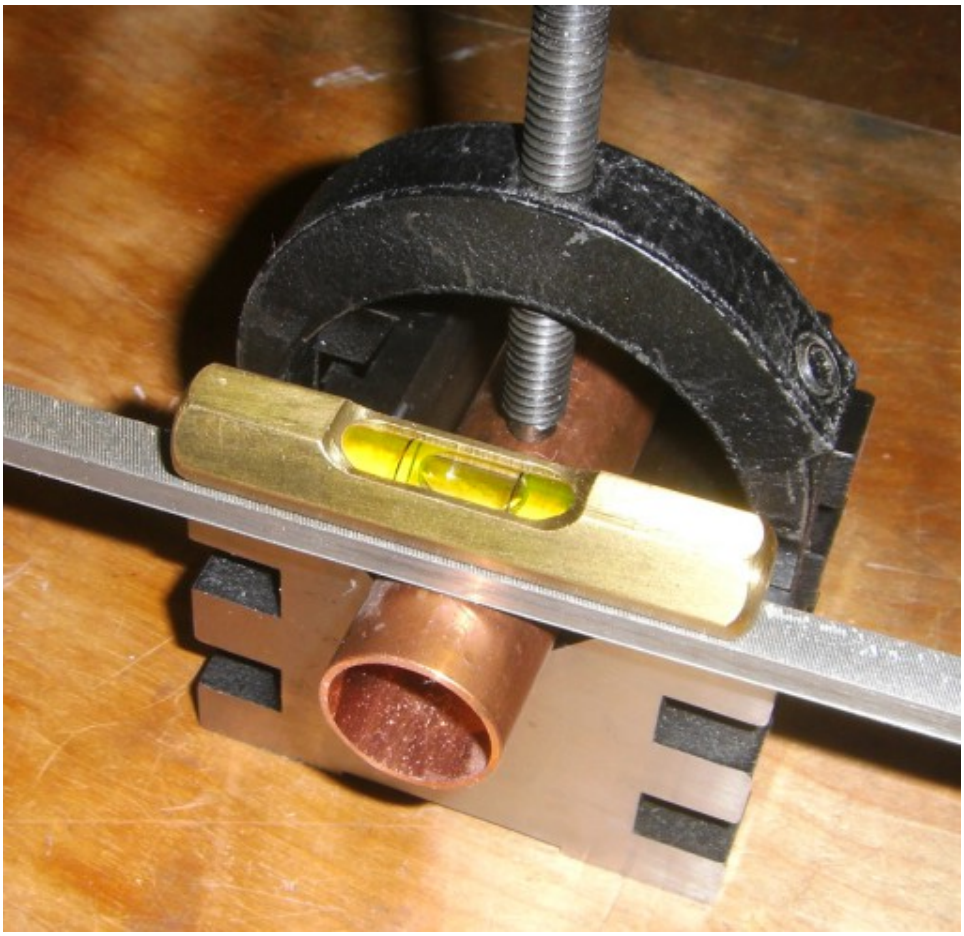

Note you only have to file a small mark -- in fact, aim for marking a line. Thus, you position the file and then only need to move it a small amount. I use a needle file or narrow pillar file; use the smoothest file you have.

Setting a table saw's miter gauge

Nearly every miter gauge I've ever seen for a table saw has a scale that is worthless for accurately setting the gauge to a desired angle (fixed angles with pins are fine, but I've not seen a miter gauge with e.g. a vernier scale for reading the angle). However, if you have a straight piece of wood

screwed to the miter gauge, you can use it in combination with your table saw top to accurately set the miter gauge to a desired angle. All you'll need for the task is a tape measure and a straightedge.

The basic method is to draw a line on the saw table that is at the desired angle, then set the miter gauge parallel to this line. The line is drawn on the table top by laying it out using the tangent of the desired angle. Here's a drawing of the basic idea:

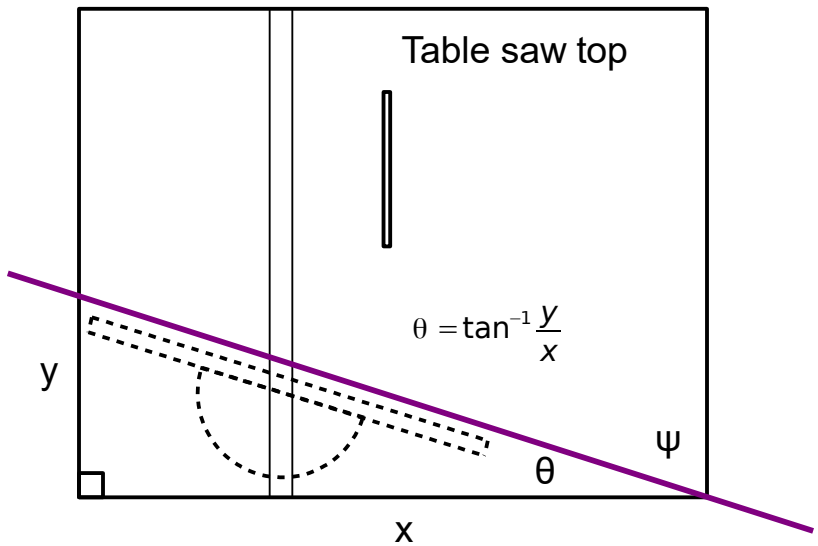

Suppose you want to set the miter gauge to angle θ (or, the angle could be the complementary angle ψ that is θ subtracted from a right angle). Assuming your saw's table top has a right angle as indicated, the angle is laid out by knowing the distance x. Then the distance y is

$$y = x \tan\theta \tag{2}$$

Measure up a distance y, make a mark in pencil, then draw the magenta line. Set the miter gauge parallel to this line.

How good is this method?. My saw's x dimension is 600 mm. Assuming I use my tape measure to lay out the distance y, I can read it easily to 1/2 mm. Suppose I want y to be 250 mm -- this means an angle of

$$\tan^{-1}\frac{250}{600} = 22.62\,°$$

If I was off a little in measuring y -- suppose I made the mark at 250.5 mm instead of 250 mm, then the angle would be

$$\tan^{-1}\frac{250.5}{600} = 22.66\,°$$

In other words, I was off by 0.04°, which is probably ignorable. I should be able to easily set my miter gauge to better than 0.1°.

If your saw table's top doesn't have a 90° angle, you can still use the technique, but you'll have to use the law of cosines.

I use a mechanical drawing pencil with a 4H or harder lead in it to draw the line. I use a 3 foot piece of ground flat stock as a straight edge; this lets me draw angles that are eminently usable for woodworking.

Drilling holes

I drill lots of holes; most of them are done on the drill press. I also use my over-sized drill press table (a great Woodsmith design from a couple of decades ago) constantly as a work table, as I can raise and lower it to convenient heights (I put my old Milwaukee 1/2" drill on it to quickly raise and

lower the table).

I'd like to discuss drilling in the home shop, as it's useful to be able to locate holes where you want them. This will be in relation to putting holes in metal; woodworking usually isn't as precise and you ideally use drills with e.g. brad points to locate the holes. Drilling in wood is complicated by varying growth ring hardnesses, which is why brad point drills are a good idea.

Most folks know that you should center-punch metal for drilling with a standard 59° drill point, as the drill point will "walk" if you don't -- and you won't wind up with a hole where you wanted it.

But there's a bit more to it than this. First, a key strategic need is to lay out the holes properly. This is usually done by scribing intersecting lines by a variety of means. If you can locate from the work's edges, one of the quickest methods for scribing a dimension is to set that dimension on your dial/electronic/vernier calipers and use it as a marking gauge (assuming the calipers have sharp tips). The calipers' sharp tips will scribe the needed mark[7]. I use a blue Sharpie marker to put down some blue dye to make it easier to see the scribe marks. Other techniques are to use layout dye, soot from an acetylene torch, and copper plating ($CuSO_4$ in water with a little acid).

You can also use hermaphrodite calipers (one of my favorite tools) and a rule, as they are made for this particular application. If you have a center point for an arc, scribe the arc with dividers. You can use a variety of geometric constructions you learned in high school geometry.

If you have a flat surface and an angle plate, a height gauge or surface gauge used with a rule make excellent scribing tools (and a height gauge is even better).

Once you have the scribe marks, you need to center punch marks at the intersections. This takes care for fine work. You'll want a fine prick punch and a good magnifier. I use a Starrett toolmaker's hammer with a built in magnifier for this. It is an expensive but perfect tool for generating punch marks, as you can examine the tip of the punch under the magnifier before striking the punch. Though it's small, it works well, as you typically only strike the punch a light hammer blow.

Here's the technique. Using the magnifier and a good light, tip the punch over a bit and move it until you have the tip on the intersection of the scribe lines. Take care to get things lined up. Once it's where you want it, give it a very light tap with the hammer. You just want to make a tiny dimple that you're barely able to see. Often, you can get the tip into the groove scribed with the scriber and slide it along that groove to the orthogonal groove.

Use the magnifier to inspect exactly where the little punch mark is. If it's not where you want it, correct the position and try again. I repeat, use <u>light</u> hammer blows.

When you have the punch mark where you want it, make it a little larger with a slightly heavier blow.

Now, set your dividers to the radius of the hole you want to drill and scribe the hole diameter on the punched mark. This provides you visual feedback on the drilled hole's location. It's an important step for accurate drilling.

Switch to a center punch and make an assertive mark good enough to start the drill in. For accurate work, locate the center punch mark under the spindle by a wiggler, then clamp the work in position. For regular work, chuck the drill and hold the work in e.g. a drill press vise. Center it by eye under the drill point. Start the spindle and just touch the tip of the drill to the center punch mark. On smaller drills, you'll see the drill move to align with the mark; move the work to get the punch mark under the drill's rotation axis. With larger drills, the drill will draw the work to be centered under it.

Once things seem like they're where they need to be, you're ready to check the location. Feed the drill down a small amount to cut a small cone. **Important**: only drill a small amount -- once you've reached the depth where the drill is cutting with its full diameter, you can no longer correct the hole location.

You'll probably see something like the following:

7 There are calipers made with carbide tips that will stand up to this scribing duty better.

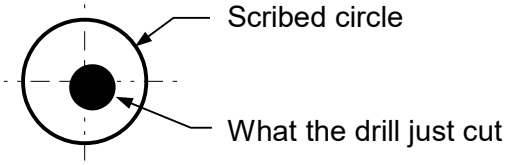

This shows you the drill is not cutting at the intersection of the scribed lines (now you see why the scribed circle is important). Use a small diamond-point chisel to cut a small groove in the direction of the scribed line intersection -- the intent is to get the drill to "walk" a controlled amount in that direction.

Other tools that can draw the drill are a prick punch or a lathe tool bit. You can make a suitable tool from some drill rod with a file. Harden and temper it.

After chiseling, try drilling again and cut a tiny bit deeper. Continue until you can see that the OD of the just-cut cone is concentric with the scribed circle. As your eye is excellent at seeing an asymmetry (i.e., the pattern mismatch), you can detect misalignments of a few thousandths of an inch.

Once you have the desired alignment, you can drill the hole. Yes, this method takes a significant amount of time, but it's the established way to get the desired accuracy "by hand". Better methods use jigs/fixtures or milling machines, but these are often not available to the home shop worker.

For virtually all holes in common shop metals except free-cutting brass and cast iron, you should use some oil as a lubricant while drilling. Fortunately, you don't need a lot of oil unless you're cutting at production rates. I put mineral oil in an old contact wetting solution bottle and it works great to put one drop in the hole at a time. For drilling a 1/4" hole through a chunk of 3/4" thick steel, I might put three or four drops of oil in the hole (drill in about 0.1 to 0.2 inches, put in a drop, drill 0.2 inches, put in another drop, etc.). When drilling steel, I'll sometimes switch to a sulfur-based cutting oil like Brownell's Do Drill. You'll want some ventilation, as some of the oil will turn to smoke (this oil vaporization is removing some of the frictional heat being generated).

If you want a hole with a diameter close to the drill's diameter, first drill a hole with the next-smaller size drill, then follow up with the final drill size -- the second drill acts more like a reamer and you should wind up with a nearly-exact hole size unless the drill is dull or has unequal lips. For the best holes, use a reamer instead of a drill.

Another tip is to make a "drill reamer" [*tmbr #3 pg 66*]: use a stone to slightly round the edge of the drill's cutting lip and the side of the drill's land. This tool can act like a reamer and is a lot less expensive.

For larger drills, be cautious when the drill is nearly through the other side -- the thin remaining metal will deform and the drill's cutting lips will grab this deformed metal. This can be quite a bit of torque on drills larger than about 3/8 inch. The work is grabbed out of your hand and smacks you smartly or cuts your hand. Most experienced shop folks learn from a few of these accidents to hold the work in a vise.

The final step will probably be to countersink the hole to remove the burr. For small holes, I usually do this by hand with a 3-cornered scraper or hand-held countersink. But for the best countersinking job, find a Weldon-style countersink (the type with the angled hole through it) or a single-flute countersink. If I have a bunch of holes to countersink, I'll do the first one manually until I get the depth I want, then set the drill press depth stop to that depth and do the remaining holes quickly.

If you have to countersink lots of smaller holes (say, up to 1/4 or 3/8 inch diameter), adapt a Weldon-style countersink to a push drill and you'll be surprised how fast that deburring goes.

Enlarging drilled holes

Some people advocate drilling holes iteratively with gradually-increasing drill sizes. This works OK for smaller holes in metal, but it's not a good idea for larger holes. This is because there's not enough support for the drill bit's cutting edge and you're virtually certain to get a lot of chatter.

There are special twist drills called core drills used to drill out cored holes in castings, but few people will have such things and they're expensive. The term "core drill" refers to the older meaning of a drill intended to drill out a cored hole in a casting (today the term usually means a hollow drill for concrete).

The basic recommendation I've found that works well is to drill a pilot hole that is about the same size as the diameter of the drill's web. This pilot hole takes the load off the larger drill's center and is worth the effort. For virtually all the drills I use up to 1.5 inches in diameter, a 1/4 inch diameter pilot hole works well.

Caution about drilling with Albrecht-style chucks

I love chucks without chuck keys, but there are times you shouldn't use them. When drilling in my lathe, I won't use them for through hole sizes larger than about 1/2 to 5/8 inches. The reason is that when the drill breaks through the back side, it can grab and the drill shank can be tightened into the chuck so that you can't get it out. I did this once with a 1.5" diameter Deming drill and couldn't loosen the chuck, even with a pipe wrench. I had to cut the drill shank off and bore the remaining material out of the chuck jaws. You'll make this mistake once and learn your lesson.

Story sticks

People have used story sticks for millenia. A story stick is a piece of material with marks on it that codify the required dimensions of something to be built. An advantage is that there's no measuring -- you just set things up to get the required dimension on the story stick. If the story stick is such that its dimensions won't change over time, then you have a convenient standard for the dimensions in the repeated construction of an object.

Machinists can make use of story sticks too. In shop projects, working with a rule, old-style calipers, and dividers is often adequate. Old-style caliper settings can be permanently recorded by putting small pins in a chunk of metal (or e.g. machine a step, turn a diameter, or bore a hole).

Divider settings can be recorded by making a small prick punch mark, then recording and annotating short arcs at the different distances. With sharp dividers, sharply-scribed lines, and a magnifier, you can reset those dividers later to the same dimension to surprisingly close values -- with a 10X loupe, I've measured that I can reset the dividers to approximately 0.001 inch uncertainty. For accurate work, you want sharp dividers. Handle those dividers carefully and be sure to protect the tips when you store them in your toolbox.

Measuring/setting angles

You can make a simple bevel from some rectangular bar stock and use this story stick method to accurately duplicate angles. First, read about the method in the `sine_sticks.pdf` document at https://someonesdad1.github.io/hobbyutil/project_list.html.

The bevel can have two prick punch marks at the same radius and you can use the dividers to set the stick separation using the story stick. Let's assume you can set the required distance to an uncertainty of 0.002 inches. The formula for the sine stick is

$$\theta = 2\sin^{-1}\frac{a}{2r}$$

where *r* is the radius of the prick punch marks and *a* is their separation. If we suppose the desired angle is 20° and *r* is 6 inches, also with an uncertainty of 0.002 inches, then a linear uncertainty propagation shows the angle uncertainty is 0.02°, about 5 times better than you can get with a vernier protractor.

Prick punch marks on calipers

Old vernier calipers such as the Starrett model 122 have two dimples on it used for setting dividers. These are occasionally useful for setting dividers and measuring their tip spacing. You might want to put something like this on the dial/electronic/vernier calipers you use. For example, put two small

prick punch marks exactly δ apart onto the jaws when they are closed. Then you can measure or set a pair of dividers by subtracting δ from the measured reading when the dividers are in the prick punch marks. δ can be any suitable number, but you'll probably want to make it e.g. 1/2 or 1 inch or 10 mm to keep the arithmetic simple.

> Starrett still sells vernier calipers that have these punch marks, but few people want to spend $800 or more for such tools.

If you're interested in making some exact marks, you'll probably want to use some machinery to help you. The easiest way is probably to clamp a prick punch in a vertical milling machine's spindle, then clamp the calipers to the table. Make a mark, move the table an appropriate distance, and make another mark.

If you have a lathe, you can make a block with two holes whose centers are exactly the distance δ apart you desire. These are accurately machined in the lathe by e.g. using toolmaker's buttons (if you don't have a digital readout). Bore the two holes accurately to size, then make a small prick punch that is only 0.0001" or so smaller than the hole diameter. Temporarily clamp this fixture to your calipers, ensure that they're in the closed position (clean off the jaws carefully before doing this), and lightly make the two prick punch marks.

Rattle measurements

Rattle measurements are a technique for measuring a bore diameter when you don't have fancy tools available. Basically, the idea is that you insert a rod of known length into a bore and measure how much it moves side-to-side (i.e., "rattles"). Knowing the rod's length and the side-to-side measurement lets you calculate the bore diameter. It's a simple and accurate two-contact point technique.

Let d be the length of the rod AB and let it rattle a distance 2μ:

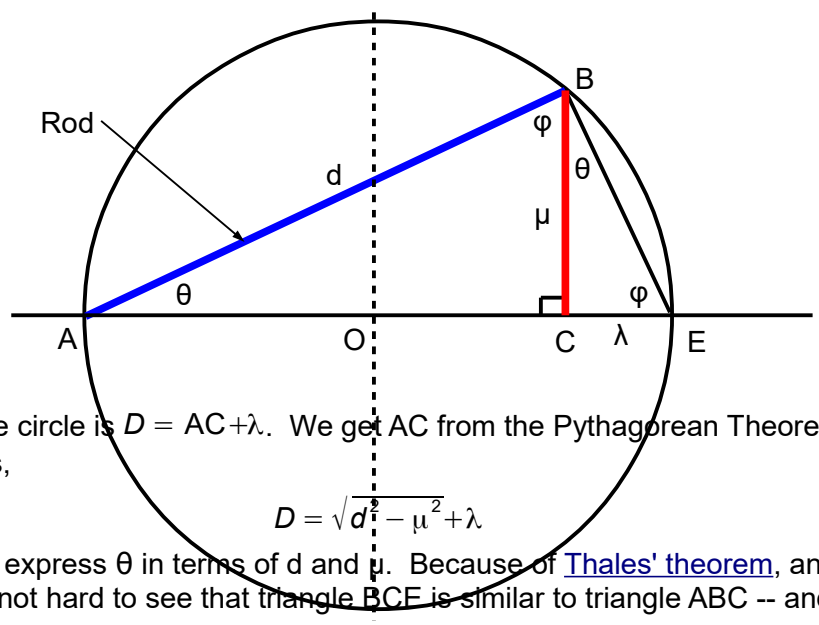

The diameter D of the circle is $D = \mathrm{AC} + \lambda$. We get AC from the Pythagorean Theorem: $\mathrm{AC} = \sqrt{d^2 - \mu^2}$. Thus,

$$D = \sqrt{d^2 - \mu^2} + \lambda$$

Now, we just need to express θ in terms of d and μ. Because of Thales' theorem, angle ABE is a right angle. It's then not hard to see that triangle BCE is similar to triangle ABC -- and angle CBE is equal to θ. Therefore

$$\lambda = \mu \tan\theta$$

But

$$\tan\theta = \frac{\mu}{AC} = \frac{\mu}{\sqrt{d^2 - \mu^2}}$$

so

$$\lambda = \frac{\mu^2}{\sqrt{d^2-\mu^2}}$$

Thus

$$D = \sqrt{d^2-\mu^2} + \frac{\mu^2}{\sqrt{d^2-\mu^2}}$$

or

$$D = \frac{d^2}{\sqrt{d^2-\mu^2}}$$

Finally, if we let μ be designated as a fraction of the length d: $\mu = \alpha d$, we have

$$\boxed{D = \frac{d}{\sqrt{1-\alpha^2}}}$$

Note that if μ is zero, then α is zero and $D = d$.

This "rattle tool" can be useful when you can measure μ reasonably accurately. Since this means you probably have to have a rule in the hole, it's not practical for smaller diameters. However, you can use some inside calipers to transfer the rattle distance 2μ to a rule -- and probably know it within, say, about 1/2 mm or less. Keep this method in your back pocket when e.g. an inside micrometer isn't available.

How good is the method? Let's look at an uncertainty calculation with with the uncertainties package of python[8]:

```
from uncertainties import ufloat
from uncertainties.umath import sqrt

d = ufloat((200, 0.01))     # Rattle rod length
mu = ufloat((10, 0.5))      # Half the rattle distance
a = mu/d
D = d/sqrt(1 - a*a)
print("Diameter = " + str(D))
```

We assume we're measuring a bore slightly larger than 200 mm. We know the length of the rattle rod accurately (200 mm with a standard deviation of 0.01 mm). The resulting bore diameter is

```
Diameter = 200.250+/-0.027
```

which we'd probably state as 200.250(27) mm. The 0.027 mm uncertainty is interpreted as a standard deviation. The bottom-line conclusion is that this method can measure the diameter to within better than 0.1 mm.

I call the above method "roll rattle", as the calipers or bar are rotated in the roll direction when you're looking down the bore. Another method is the "pitch rattle" method where the calipers are moved in the pitch direction when looking down the bore. This method was routinely used a century ago by machinists fitting railroad wheels to their axles. The math is easy to work out with the Pythagorean theorem.

Knurling

I would imagine those floating scissors-type knurling tools are nice to use, as they can self center and they don't load the lathe's spindle bearings like traditional knurling. But in using my lathe for 50+ years, I've never gotten around to building one, and still use the traditional two-wheel tool you press against the work with the cross-feed.

8 This python library utilizes linear uncertainty propagation.

There are a few things to consider to get a good knurl:

- ♦ Start with an appropriate knurling diameter.
- ♦ Align the knurling tool vertically so both wheels are knurling equally.
- ♦ Align the knurling wheels so that their axis of rotation is parallel to the lathe's axis of rotation.
- ♦ Use oil while knurling, both for the work and to keep the knurl wheels lubricated.
- ♦ Knurl at the right speed.
- ♦ Don't be shy.
- ♦ Don't disengage the knurling tool until you're finished.
- ♦ Clean things up.

The knurling diameter is important: **you want the circumference of the work to have an integer number of knurl indentations fit around it** and this requires a specific starting diameter. Let

n = number of teeth on knurl
d = knurl diameter
D = nominal work diameter
D_1 = diameter to reduce work to in order to get a good knurl

The circumferential distance between two adjacent teeth on the knurl is

$$c = \frac{\pi d}{n}$$

and the integer number of crests that will fit around the nominal diameter is

$$N = \text{floor}\left(\frac{\pi D}{c}\right)$$

where the floor function is the largest integer less than or equal to its argument. This means the needed circumference is Nc; therefore, the work diameter required for this circumference is

$$D_1 = \frac{Nc}{\pi}$$

> **Example**: my knurls are 40 pitch and 3/4 inch in diameter. Therefore $c = \pi(3/4)/40 = 0.058905$. Suppose I start with a 3/4 inch diameter chunk of bar stock, but I don't want the tips of the resulting knurl to be larger than 3/4 inch. Thus, I must reduce the stock's diameter a bit. I calculate N as
>
> $$N = \text{floor}\left(\frac{\pi(3/4)}{\pi(3/4)/n}\right) = n = 40$$
>
> (Of course, this is the same as the number of teeth on the knurl.) But we want the resulting knurl to be smaller than 3/4 inch. Thus, we use N = 39. Therefore, the required work diameter is
>
> $$D_1 = \frac{39(0.058905)}{\pi} = 0.731 \text{ inches}$$
>
> There's another twist. When you knurl something, the finished work diameter is larger because you're cold-forming the material. I know from experience that knurling 3/4 inch diameter material will cause a growth of the diameter of about 0.02 inches[9]. Thus, I may have to file a bit off the knurl's points to keep the resulting diameter below 0.75 inches -- or, I might choose $N = 38$ and use that resulting diameter instead.

There were times when I was ignorant of this proper diameter method and just mashed the knurling tool into the work -- sometimes it worked fine, sometimes it didn't work as well as I liked. Your

9 This is an old machinist's dodge: if you turn too much off a diameter on the lathe, you can knurl it and get the desired diameter, as long as the knurled appearance is OK.

mileage may vary. However, I think if you follow the suggestions here, you stand the best chance of getting a decent knurl.

The alignment steps are important. I first turn a smooth surface of the requisite diameter. Then I just touch the knurling tool to the work and examine the pattern. If it's not an evenly-hatched knurl (i.e., indentations from both wheels), then one of the wheels is not making as much contact as the other. You can determine which by putting a light behind the wheels and looking down the lathe's axis -- you'll see light behind the wheel that needs adjustment. This is where the Aloris-style toolpost shines over the traditional slipper toolpost -- you just make a quick adjustment with the height screw, clamp the tool holder, and try again.

Next, if the pattern isn't equal in a direction parallel to the rotation axis, you need to rotate the knurls about a vertical axis so it is. This can take some fine adjustment by tapping with e.g. a brass hammer. For convenience, you could monitor the movement with a dial indicator and this might make it easier to get to the proper alignment, but I just adjust until it looks right.

For oiling, I keep a plastic squeeze bottle of oil next to the lathe and just squirt a few lines onto the work -- this seems to work well and doesn't make an oily mess.

Once things are adjusted, start knurling. You can look up the recommended speeds in the handbooks, but for aluminum and brass, I just use the lowest speed on my lathe when it's not in back gear, 360 rpm. For steel, I'll use speeds about half of this. Production folks with modern equipment use normal turning speeds, but I'm using an old lathe.

By "don't be shy", I mean that you'll probably have to feed in the cross-feed harder than you think you should to get a knurling pattern. Yes, this puts a substantial load on the lathe, but they seem to be able to take it (at least my lathe has been doing it for more than 50 years).

You can disengage and re-engage the knurling tool if you're careful, but you need to verify the knurling wheels are correctly in the old pattern. If you don't, you'll get an ugly double knurl. I virtually always knurl by feeding things with the longitudinal feed manually, unless I'm producing a long knurl. You can use the longitudinal feed if you wish. I'll typically feed close to the spindle, then feed back to my starting point near the tailstock. Crank the cross-feed in a bit more and repeat. Stop the spindle and check the resulting knurl every so often -- I use my fingers to feel when the knurl is about what I want.

When you're finished. you may want to take a file to the knurl and break off the sharp points, depending on the end application. For a knurl on a tool that someone will grab and turn aggressively, this filing is a good idea to reduce the wear on their hands, as those little points are sharp.

Unless you have the more expensive knurling tools that cut the knurl, the forming-style tools will leave small flecks of material on the part. These need to be cleaned off. I wipe the oil off, then scrub the knurled part with a file card I keep in the lathe bed. I've read that folks who will subsequently have aluminum anodized can find that the flecks stuck around and, after the part has been anodize, the fleck can come off, exposing the raw aluminum color. A light touch with a brass wire wheel could also be useful.

The knurl wheels' axles take a lot of pressure, so keep them well-lubricated (a high-pressure grease would be better than oil and it wouldn't hurt to add some powdered graphite). I've read some folks like to use carbide axles instead and a kink was to use broken 1/4" end mill shanks as axles, as they're tough steel already hardened. You can also make your own axles from drill rod and heat treat them. Try for around a few ten thousandths of an inch clearance. The knurl should spin freely but with very little play.

What I've described is the method using two knurling wheels; there are other forms of knurling you can find out about by searching the web. One is called "coining", as it puts a knurl on the work that looks like the edge of a coin. Coins had this knurling put on them to make it obvious when someone had filed off some of the coin's material. I have a single coining wheel on a holder that clamps in a tool holder and it coins just like the usual diamond-pattern knurling wheels. If you don't have such a

tool, you can simulate it by turning a threading tool 90° and dragging it against the work, cutting a groove. Rotate the spindle an appropriate amount and repeat. It's slow, but it works. Mark a piece of paper with suitable dimensions and wrap it around the spindle; use a magnet to hold a wire as an index mark and you can get even spacing of the grooves. A wire wheel can remove the sharp burrs.

Small rules

Cut up an old rule to get some small rules. You'll find these handy for measuring things in close spaces. You can use an abrasive cutoff wheel to cut the rules. Use a wooden shooting board to sand things square and to length:

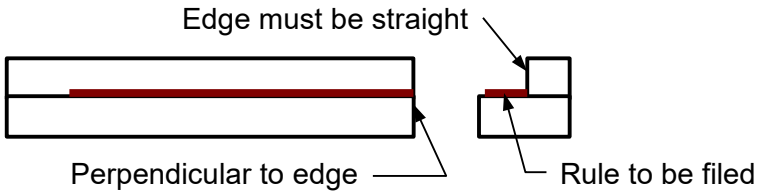

Glue some sandpaper to a stick to make a "file". You'll find that with fine sandpaper and a jeweler's 10X loupe, you can put a square end on the rule and get the length within about 0.001 inches. Coat it with e.g. a clear acrylic to prevent rust.

You can buy sets of small rules from companies like Starrett, but it's more economical to buy one rule and cut it up into some short pieces yourself.

If you have a radius gauge set, check to see if its little knurled holder will work with these short rule pieces, as that holder will prove handy in cramped spaces.

Split nuts for holding threaded work

[*dpk:99*] shows the following tool for holding threaded parts in the lathe for turning:

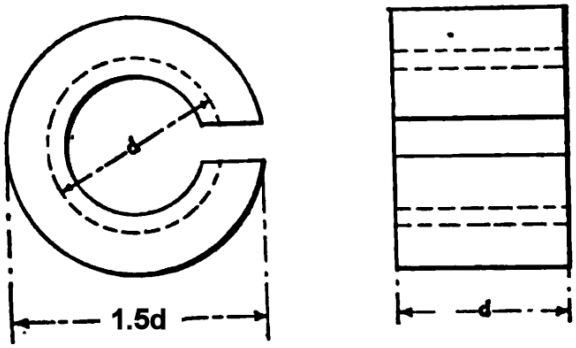

The diameter *d* is the major diameter of the thread. They are made from tool steel, hardened, then given a spring temper. Before hardening, a cold chisel is used to open the split a little so that they thread onto a threaded part at maximum material condition freely. They are then held in a dog, chuck, or collet and, when clamped, hold the thread tightly. If the opened diameter is a little too large for your collet, turn/grind it to size after hardening.

I've used similar nuts for years, but I make them from free-cutting brass hex or round stock and hold them in a collet. A small jeweler’s-type saw is used to cut a slot into both sides:

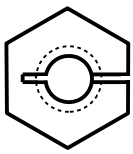

Cut the slot after tapping and deburr.

Keyseating

[*rk:14*] gives the following keyseating tool for the lathe:

> The illustration shows a tool made to keyseat some gun-metal articles and, as the hole was 3/8 inch

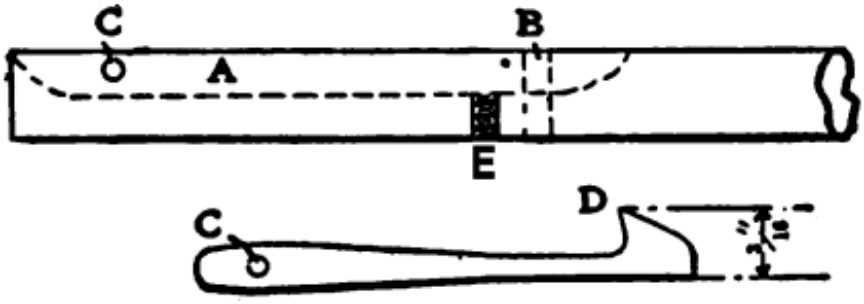

> diameter by 2 inches long, I though it impracticable to chip or file them -- the more so, as they had to slide on the shaft without much shake. This necessitated a smooth, straight keyway.
>
> I took a piece of 3/8 inch shaft about 12 inches long, milled a keyway A in it about 3 inches long, as in the figure, and inserted a tool shown in the lower part of the figure. B is a 1/8 inch pin for a stop to take up thrust, C is a 1/16 pin holding tool in slot, D is the cutting edge.
>
> I then held the articles in the universal chuck of the lathe, the tool mounted in the tool post of the lathe. I then pushed through, tightening 1/8 inch screw E each cut. The tool and twelve keyways complete took 1-1/2 hours.

Essentially, it's a one-tooth adjustable broach. Nice idea.

Boring out a big pulley

[*rk:10*] gives the following story from 1908 about a shop boring out a big pulley. I think it's interesting reading; here's the text:

> The manager of a brick yard came into our shop and asked if we could bore out a big pulley for him. It was one they used to have on a 3 inch shaft, but they had not been using it for some time and now wanted to put it into service again on a 3-1/4 inch shaft. It was a solid cast pulley, about 60 inches in diameter and 12 or 14 inch face. The hub was about 10 inches long.
>
> He wanted to get that big pulley bored out to go on a larger shaft than it was intended for when made. There was neither lathe nor boring mill in our small town that would swing 60 inches. But he wanted to avoid sending that pulley fifty miles by rail, paying freight both ways, so he asked if we could bore it, and then was not inclined to think us in earnest when we told him we could.
>
> "Bring it right up," said I, "and by this time tomorrow it shall be ready for you." He said he would have the pulley sent right up, so I started at once to get ready for the job.
>
> We had odds and ends of shafting in the shop, so, taking a piece of 3-1/4 inch shafting, about 2-1/2 or 3 feet long, I turned one end for about 6 or 8 inches, allowing for a finishing cut when the pulley should arrive so as to form a pilot nicely fitting the old bore. At the shoulder formed by turning I drilled a hole and inserted a boring tool the end of which was just flush with the large diameter, and the cutting edge of which was about 1/32 inch in advance of the shoulder, thus, regulating the amount of feed.
>
> I splined from the end of the shaft up to the tool to allow the chips to drop down, then when the end was turned to fit nicely in the bore of the pulley, which by this time had arrived, we were ready for business. And I might add right here, for the consolation of some of my fellow job shop operators, that the work yet to be done on that pulley was about the only part of the job that many of our customers could have distinguished as belonging to them. That was all right in this case, as they neither saw the tool made nor the pulley bored, and I do not now remember whether they knew how the job was done or not.
>
> With the pulley laid flat and blocked up about a foot off the floor, the bar inserted and a dog put on the upper end, between the tail of which and the shaft a piece of 1-1/2 inch gas pipe, long enough to extend well across the pulley was laid, two men walking round and round the pulley easily and accurately bored out the hole, or counterbored it, if that would be more correct. The bar being pretty heavy furnished all the weight or pressure needed to feed it into the work. While others may suggest other ways, still I think this method of re-boring a pulley is about as simple and cheap as any, especially as you can employ the very

cheapest of labor to do the boring.

Volume 2 of *Machinist Bedside Readers* [*tmbr:96*] has another boring tool made by a shop for reboring large cylinders, although this tool is a more complicated design and has an automatic feed. Regardless, the basic idea is good to know and may extract your tail from underneath that rocking chair someday.

Here's my interpretation of the boring tool he made:

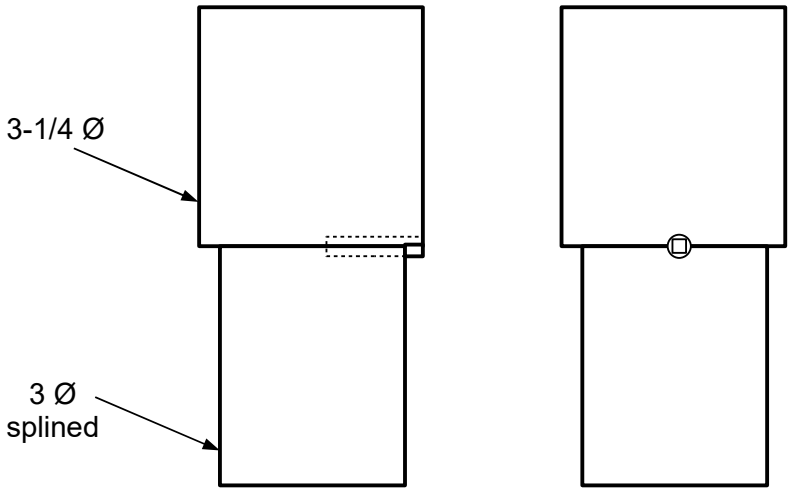

Of course, you'd grind the proper clearances on the cutting bit. If I had to do such a job, I'd look at using a 3/16" or 1/4" square lathe bit for the cutter. I'd grind some suitable relief on it, then grind off the four edges in a taper so it could be driven into the hole so it would jam in place. Then I'd cut it off and grind it smooth with the larger OD. Since this is probably a one-off tool, another approach would be to make a cutter from drill rod.

I didn't show the splines he cut on the 3 inch diameter to let the chips fall through nor a way of clamping a dog to it for turning (I'd just drill a hole for a tommy bar).

Matching a profile

Log house builders and cabinet makers know about this method, but others might not. If you have a board you want to cut to fit an uneven surface, clamp the board rigidly next to the surface and use a compass held against the uneven surface in a consistent fashion to trace the surface's profile on the board.

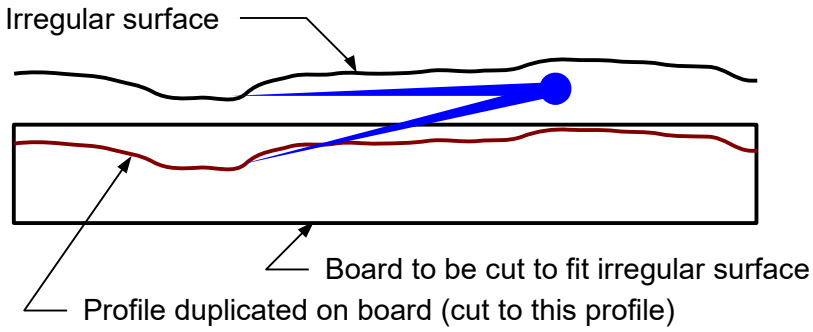

Cut the marked pattern with a jig saw or band saw to the scribed line and you'll get a decent fit.

The canonical example of this is when you want to attach a board to a chunk of wall with plaster or drywall and you find that the wall is anything but flat.

A quickie method is to put a pencil point inside a washer and drag the washer against the wall. You'll

miss the high-frequency variations, as the method is a low-pass filter.

Veritas makes a compass (05U05.01, called a transfer/log scribe) with level vials for doing this type of work, but it's expensive ($115) if you only need to do it once or twice. Other vendors use e.g. the Starrett 85 wing dividers suitably modified, but these are substantially more expensive.

But you don't need such specialized tools if you only do this occasionally -- just grab that cheap school compass from your kids' school supplies and it will work. If you don't have a compass, use some rubber bands to attach a pencil to some machinist's inside calipers or hermaphrodite calipers. If you find you need to do this often, then you'll make or buy a suitable tool. Hermaphrodite calipers work if you can use the scribe to mark the work. Or, get a drafting compass and make a bent leg for it from some 1/8" welding rod and use it with a pencil lead.

If you have to do a lot of this, the tool of choice is probably Starrett's 85 wing dividers with a pencil and one of the bent legs for making inside calipers. These calipers and options are expensive, but they'll last multiple lifetimes.

Tap drills & cutting threads on lathe

The general-purpose method for calculating the size of a tap drill for 60° metric or inch threads is to subtract the pitch p = 1/tpi from the major diameter D (here, "tpi" is threads per inch). This gives roughly a 75% thread.

If you're cutting a thread on a lathe with a vee tool and have your compound rest set to 29°, the compound rest will be fed in by

$$x = \frac{\sqrt{3}}{\text{tpi}} = \frac{1.732}{\text{tpi}}$$

To cut an external thread, turn the work to the desired maximum OD. Then kiss the threading tool to the surface and feed in the distance x on the compound rest. The thread should then be at the maximum pitch diameter.

Fine tuning a thread

[*stk:23*] comments about a lathe that needed to cut a 1.5 mm pitch thread (0.0591 inch pitch), but the lathe only had a 17.5 tpi thread (0.0571 inch pitch), for a difference in pitch of 1.9 mils. The difference was made up by cleverly setting over the tailstock center by 3/8 inch and setting the taper attachment to the same taper. The travel lost by the tool in following the taper brought the error to an acceptable level. I've not tried this method yet, but it may be useful some day.

The pitch difference was

$$\frac{1.5}{25.4} - \frac{1}{17.5} = 0.0019$$

The basic idea is shown in the following triangle:

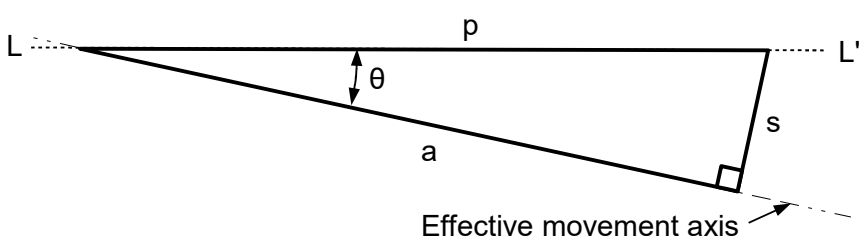

The lathe's rotation axis is LL' and the carriage moves parallel to this line. But because of the tailstock set-over and the taper attachment, the effective movement is along the line a. The distance a is $p\cos\theta$. We don't know the length of the 1/2 inch diameter thread that was turned, but [*stk*] said the error was 10^{-5} inches. Thus, we know that

$$\frac{1.5}{25.4}\cos\theta - \frac{1}{17.5} = 10^{-5}$$

or

$$\theta = \cos^{-1}\left[\frac{25.4}{1.5}\left(\frac{1}{17.5} + 10^{-5}\right)\right] = 14.58\ ^\circ$$

Tightening a wooden handle

I haven't tried this yet:

When a tool's head has separated or become loose on a wooden handle, soak the tool's neck in a tray or bucket of antifreeze overnight. Make sure the antifreeze covers the section where the wooden handle joins the metal head. The antifreeze acts like a wax in solution, penetrating the wood fibers, swelling them, and then holding them in the new shape so that the head no longer wobbles.

I have found that a loose handle on a hammer is eventually going to cause a problem. If I can't tighten the handle on the hammer, I'll make a new handle from a suitable chunk of wood. Use some spring-bow calipers to gauge the taper in the handle hole and file a handle to fit. Then drive in a good wedge. Done properly, the handle shouldn't come off again.

FYI, most hammer heads I've made handles for have holes that are tapered in both directions (usually a few degrees). It's the taper at the top of the handle and the wedge that expands the wood into that taper that is the only thing holding that head onto the hammer.

Drilling a hole in a sphere

Clamp a board to the drill press table. Using a Forstner bit, drill a suitable hole to index the sphere. Without moving the board, clamp and drill the sphere using the hole's edges to locate the sphere directly under the spindle axis.

Strap clamps

Strap clamps are commonly used on the mill to clamp the work to the table. They are often used with step blocks to give a variable height. Here's a sketch from [*dpk:55*] for another design:

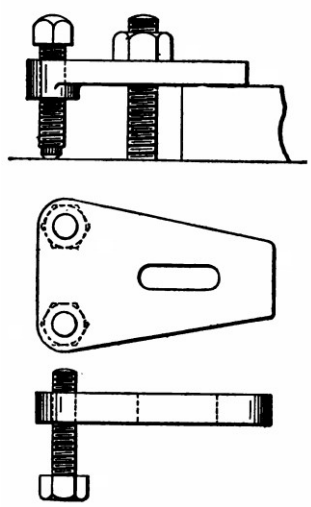

You'd keep a number of different bolt lengths handy for different clamping jobs.

Here's another height adjustment for strap clamps that's easy to make on the lathe:

A nice feature is that it's more compact than step blocks.

Also see https://someonesdad1.github.io/hobbyutil/shop/MachinistClamp.pdf for more ideas.

Some common threads

A standard US garden hose thread is 1-1/16 inches OD and 11.5 threads per inch.

A 2 liter pop bottle will mate with a vee thread of 1-1/16 inches OD and 8 threads per inch.

A standard light bulb with an Edison base E26 is 26 mm OD and 7 threads per inch.

A common female thread size on diamond core drills is 1¼ inch diameter by 7 threads per inch.

Screw slotting

Here's a tool you can make to help you slot screw heads with a hacksaw:

The rollers are hardened.

You can use a grinding wheel or belt sander to change the cutting width of hacksaw blades. The typical blade I use in my shop (I like Nicholson or Lenox blades) cuts a slot about 0.03 inches wide. You can remove the set by grinding or sanding free-hand or make a little fixture to help hold the blade.

A jeweler's saw can also be used and there's a wide variety of blades to choose from. Obviously,

these can also be treated to the grinder or belt sander to customize the size (although the blades with pins are harder to fit on a belt sander).

You can buy screw slotting files; these are topologically equivalent to a pillar file, but are wide and skinny. Brownell's sells them, but they're expensive -- $40 to $50 each. Look for some Grobet screw slotting files, as they seem to be cheaper; one place to get them is from Otto Frei in Oakland, CA (these cut pretty slowly, as they have fine teeth). You might also find something suitable at Midway.

> I bought some screw slotting files in the 1960's from Frank Mittermeier in New York and they weren't too expensive as I recall. I'm still using them, but wouldn't buy any new ones today because I'd make something suitable.

Equaling files are also available, but they will widen a slot if you're not careful because they cut on all four surfaces unless you remove the unneeded teeth.

If you have a belt sander, it's not inconceivable that you'd use it to sand down some cheap files so that they could be used as screw slot files. The trick would be to not heat them up enough to draw the temper. But that could be a lot of material to remove. Start with a narrow pillar file. You could also band saw hacksaw blades to the desired slot with, but this does remove the blade set.

Also check the machine shop supply places for slitting saws. If you can find a saw with suitable thickness, they're straightforward to mount in a mill or drill press and they'll cut slots easier than you can do by hand. The cutters are also substantially cheaper than those screw slotting files. The trick will be having a drill press speed that's slow enough.

Abrasive wheels in a Dremel tool can also work to cut a slot, but you'll want to hold things in a fixture, as a hand-held job will look crummy and it's easy to break the fragile wheels. Use a couple of hose clamps screwed to a 2x4 to hold the Dremel tool and butt it up against another board that holds the screw. Even better, make a fixture that includes a slot (like a table saw or use a dovetail) that ensures the cutter only slides on a line. You can also buy high speed steel slotting saws for the Dremel tools, but they need to be run at lower speeds and they have the usual ridiculous consumer markup. You could make some of desired slot width by doing the usual belt sander tuning.

If you have a milling machine or lathe, you can make small "shaper" bits from e.g. hacksaw blades or cutoff blades and use the machine tool as a shaper. Here's a plan view looking down on a lathe spindle:

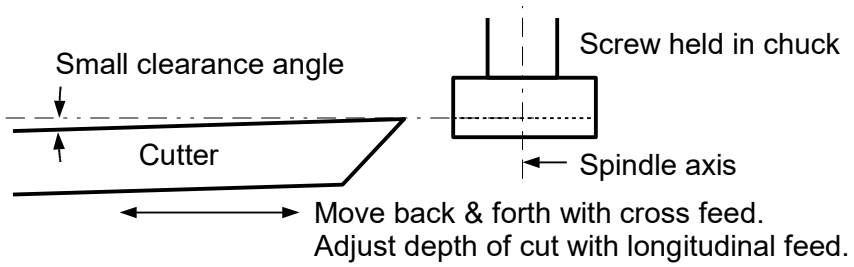

A quick way of doing this is in the mill or drill press. Put the cutting tool in the spindle and quickly feed up and down with the spindle feed handle (clamp the work to the table and clamp the spindle so it can't turn). Slowly move the screw head to adjust the depth of cut. You can make a cutter pretty quickly from a chunk of 1/4" or so drill rod and a file. Here's a possible shape to cut a slot width of *w*:

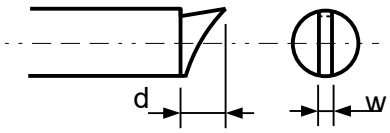

Vary the depth of cut *d* for various tasks. Such tools are used to cut square corners and replace a

broaching operation to cut e.g. square or hex holes.

If you do have a milling machine, perhaps the most straightforward way of cutting screw slots is to buy suitable slotting cutters. Three or four cutters should handle most common needs.

Cleaning up lots of little stuff

Find some silkscreen material -- it will come handy in the shop one day. My wife found the end of a roll about a meter wide and it's quite useful in the shop for filtering things like paint, oil, antifreeze, and gasoline. Wrap small things in this material and dip & shake in solvent to clean the parts.

It also makes a good catch-all for your shop vacuum. Stick a pouch of it down the intake nozzle as a filter and vacuum up small parts that e.g. have spilled on the floor. You'll be able to separate things out easily later. In a pinch, use an old sock or nylon stocking.

Cleaning leadscrew

An old tip is to use some coarse twine to clean your lathe's leadscrew. Start the leadscrew turning and just hold the twine in the thread's groove. If you've never cleaned your lead screw before, you'll see a lot of crud come out of it. Dip the twine in a solvent like kerosene for better cleaning. Then do this cleaning more often -- the half nuts will last longer.

Belt sand hacksaw blades

Use a belt sander to remove the set of the teeth on one side of a hacksaw blade. Then you can saw up flush to a mark. One use might be cutting dovetails (you'll need two blades with their opposite edges ground off). I've found that an 18 tpi hacksaw blade is good for general-purpose cutting of wood in the shop. For fine cutting like dovetails, tenons, etc., you might want to use 24 or 32 teeth per inch blades instead.

Welding rod

Get some 1/16", 3/32", and 1/8" copper-plated low-carbon steel welding rod from your local welding supplier. They are typically drawn to an accurate size and are straight. They make good rod for things like a hacked depth gauge, spacers, parallels, rollers, and a whole bunch of other uses. I cut up pieces into 8 to 10 inch lengths and store them in the main drawer of my machinist chest so they're handy when I need them.

Helical cut in hose

You can make handy things by cutting a rubber hose in a helical[10] form -- for example, an expandable rubber handle for a tool or a chafe-guard for a rope that you don't have to thread the rope through. It could also cut some thin plastic tubing to make a wiring loom similar to the commercial corrugated plastic wiring looms e.g. used in cars.

One way to do this is to drill a hole through a chunk of wood that is slightly larger than the hose's outside diameter so that the hose is a slip fit. As an example, I made a fixture to helically-cut some 3/4 inch garden hose with an outside diameter of 1.02 inch. I set an expansion bit to cut a hole about 1.05" in diameter, which was a slip fit for the rubber hose. Then I marked a 45° line on the top and cut a slot half way through the hole with a hacksaw. Here's a sketch of the piece:

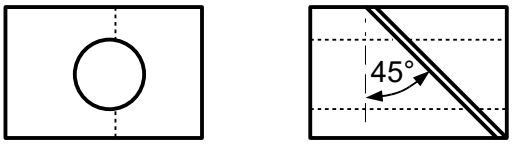

I made it from a scrap piece of 2x4 with a few minutes of work. It's basically a miter box with a hole through it.

10 Most non-technical people call these spirals, but that's a misnomer, as a spiral is a figure in a plane.

To use, insert the hose and start making the cut with the hacksaw. As the hose comes out on the cut side, you grab the finished end and pull and rotate the hose while you're cutting. I was a bit surprised by how easy and quick it was.

It does leave a rough edge that can be cleaned up (I used a hacksaw blade with 18 teeth per inch). I tried grinding all the teeth off an old hacksaw blade and used it as a knife blade, but it didn't work as well as the cut with the hacksaw. A 32 tpi hacksaw blade also didn't work as well as the 18 tpi blade.

> I haven't tried this, but perhaps a better cut (that would be faster as well) would be to clamp such a fixture to your bandsaw's table and feed the hose through it.

A helix on a cylinder is determined by its pitch p and the cylinder's diameter d. The relationship is worked out by "rolling out" the helix onto a plane triangle:

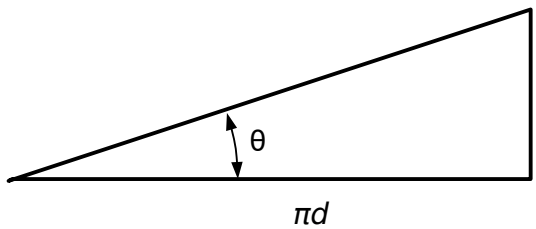

$$\text{lead} = \frac{1}{\text{pitch}} = \frac{1}{p}$$

Then we have

$$\tan\theta = \frac{1}{\pi\, p\, d}$$

The above 1" hose with a 45° angle in the cutting fixture resulted in a helix pitch of $p = 2.55$ inches. In this case, the resulting angle θ is 51.5°, so we're about 6° off from the actual angle used. Some of the discrepancy is probably caused by the flexing of the hose and some of the mechanical force needed to get the hose through the fixture. However, the formula lets you calculate the approximate angle needed to get a desired pitch and you can fine tune things as needed because the fixture is so quickly made.

Carpenter's tools on aluminum

Carpenter's tools such as a hand saw, chisel, plane, and Forstner bits can be used (with a little care) on aluminum. For example, I use my wood-cutting bandsaw a lot to saw aluminum sheet and plate up to 1 inch thick. If possible, use a lubricant to aid in cutting, especially when drilling holes. Slow things down if possible with large cutters to get about 300-600 sfpm (1.5 to 3 m/s).

I also occasionally use my chop saw and table saw to cut aluminum stock. Keys to successful cutting are to use light feeds, blades with lots of teeth, and hold the material firmly or it can be yanked out of your hand quickly.

Thinning a small piece of sheet metal

Suppose you have a small piece of sheet metal (e.g., a washer) that needs to be just a bit thinner. Place the metal piece between a block of steel and a block of wood. Use the bench vise to press the blocks together. This will cause the washer to be embedded in the wood because the wood fibers will be crushed. Continue pressing until the amount of metal to be removed is just above the surface of the wood. Then use a file to remove the metal; the wood prevents you from removing too much metal.

This is topologically similar to filing buttons (see here), but has the advantage is that the wood pocket also holds the sheet metal steady against the filing forces. An analogous method, if you can hold the sheet metal stationary, is to lay a file on some parallels and shim them to get the proper amount of metal removed. One method of holding the washer is to use double-sided carpet tape.

Doing such thinning in the lathe is more challenging because that washer is hard to clamp unless

you have a magnetic clamp or solder/glue it to a suitable backing piece.

I've used my belt sander on thin things to thin them more. On a suitable board, screw a piece of 1/8" thick aluminum to the end to act as a stop. Lay the work on the board and start sanding the workpiece as needed -- the stop will get sanded down too.

Riveting

In the old days, rivets were used frequently as a fastening method. Today, screws, welding, and adhesives are more common. However, rivets can occasionally be useful in the shop.

The handiest form is probably the pop-rivet, as it can be installed in a blind hole (i.e., you don't need access to the opposite side). I suggest you get a Pop-rivet tool and a selection of pop-rivets, as you can install things quickly by drilling a hole and using a rivet. However, occasionally you want the surface to be uninterrupted (the Pop-rivet sticks above the surface slightly); using regular flathead rivets can provide such a feature with countersinking. You can buy a box of rivets, but you'll want to get a selection in different lengths, as you'll be riveting things of different thicknesses. Since I only occasionally rivet things in this way, buying a bunch of rivets doesn't make a lot of sense (since these are usually round-head rivets, you'll also need to make or buy a **rivet set**). Here's how I make flathead rivets when I need them.

I make rivets from copper electrical wire. A 10 gauge solid copper wire is 0.102 inches in diameter. A number 38 drill is 0.1015 inches in diameter, so a chunk of 10 gauge copper should be a close fit into a hole drilled with this drill (drill the hole first with a slightly smaller drill and finish drill it with the #38 and it will be close to the drill's size). It's better if it's an interference fit, but there can also be a goodly amount of clearance, as the riveting with a hammer can expand the chunk of copper. I measured my #38 drill with my micrometer and found the drill diameter was about 0.1017 inches. After I first drilled the hole with a #39 drill and followed it with the #38 drill, I was able to push a 0.101 inch diameter pin gauge through the hole, but not a 0.102 inch diameter gauge. The 10 gauge wire I used measured a mean diameter of 0.1021 inches, so it was a slight interference fit in the drilled hole.

Clamp the two pieces you want to join together and drill the #38 hole through them. Use a countersink to put a chamfer (perhaps 0.02" deep) on either side. Here's the hand countersink tool I use sitting on a 4 inch square of hot-rolled steel I use for my heavy chunk of metal (it's about 40 pounds):

Here's the result of putting a countersink in the aluminum with the #38 drilled hole using the hand countersink tool:

For the pictures, I joined two scraps of 1/8" thick aluminum sheet. Here are two ways of riveting these pieces together.

Method 1: Cut a piece of the 10 gauge copper wire to a suitable length and slip it into the hole. Using the ball on a ball pein hammer (a 4 to 8 ounce hammer is about right) and a heavy chunk of metal as a back-up, peen a flattened area on one end of the copper wire. Get it to be a reasonable fit in the countersunk hole, but have it stick up proud of the surface a short distance. Tap it in so it jams in the hole as deep as it will go.

Turn the work over and cut/file off the excess copper so that a reasonable amount sticks above the surface. You'll learn what "reasonable" means by installing a few rivets (how much depends on the diameter of the drilled hole and the size of the countersink). Then, with the copper rivet firmly resting against the heavy chunk of metal, give the rivet a couple of good raps with the flat end of the hammer. This causes the copper to inelastically deform in the hole, filling it and the countersink tightly. File both heads down nearly flush (e.g., with a bull's foot file).

Method 2: Measure the thickness of the two pieces you'll join and cut off a chunk of wire longer than this. How long? Since I was joining two pieces of metal that were a total of 0.25 inch thick, I estimated that it would take about a 0.4 inch long piece of copper wire. I put the wire in my wire cutters, measured from the cutting edge to get a 0.4 inch piece, and cut the wire. I then put this into the hole, sat the assembly on the heavy metal block on two halves of a Popsicle stick, and used the flat face of the ball pein hammer to expand the rivet in the hole. Because I had chosen the proper thickness using the Popsicle stick, I was able to pound the rivet down nearly flush with the surface. I then turned the piece over and pounded the other side flat. I had nearly a perfectly flush rivet with no excess material and no hammer dings on the aluminum:

I used a machinist's bench block to pound the rivet against, as the hot-rolled material has lots of scale and, thus, a non-smooth surface:

The picture also shows the Starrett #815 toolmaker's hammer, which is a very useful little hammer in the shop. The magnifier is handy for over-40 eyes.

You can drill a few holes and experiment with different techniques and treatments. Look up "rivet set" on the web for the tool used to install round-head rivets (you'll find both hammer-driven types and pneumatic hammer attachments). You can make a round-head rivet set with a chunk of steel and a suitable ball-end milling cutter. You can also do rivet setting in a bench press or, in a pinch, a vise.

If you want to go one step farther, you can make a tool that you can make flat-head rivets with. Here's how I made one with a hacksaw, file, vise, machinist's clamps, and a drill press.

I had some 3/8 inch by 1 inch rectangular steel stock. I cut off two pieces about 0.45" long (I just did it by eye and didn't measure):

These were filed flat on the long edge to fit together, clamped, then center-punched on the seam for drilling:

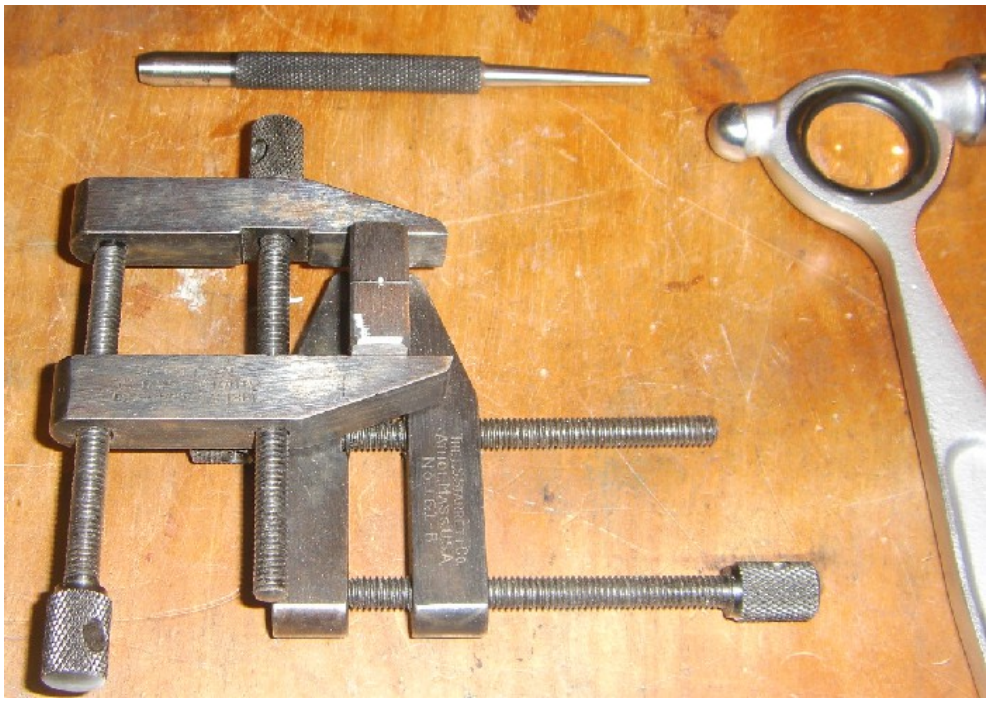

Then the #39 and #38 holes were drilled as above and a countersink was added:

The resulting two pieces were thus:

These then have a chunk of #10 AWG solid copper wire put into them and clamped in the vise; note the 2 inch long chunk of scrap steel tubing as a back-up to stop the pieces from moving when hammering:

The copper wire is pounded on and a flat-head results (it can be filed flush for a nicer appearance):

Here's the resulting rivet

The head is a bit lopsided, but that will get filed off once the rivet is set. You could also file it in the fixture; however, if you needed to make a bunch of rivets, you'd want to case harden things so the file would skate on the fixture (or make another holder for filing without the countersink).

The one inch height is a bit long; if I was going to use this tool to make a bunch of 1/2 inch rivets, I'd cut it to about 0.6 inches.

With a little more work, I could file the other edges flat, clamp them, and then drill/countersink them to take 12 gauge wire.

To avoid the need for the support under the tool, you could file or mill some ledges so that they would index on the top of the vise jaws. If the copper wire slips in the hole while you're pounding, you can file off slight amounts of the metal surfaces until the holes grip the wire firmly. Another way of getting the same behavior is to clamp a thin piece of paper between the two metal pieces before drilling them (look for paper that is 0.002 to 0.003 inches in thickness).

You can also use brass rod to make small rivets, but note it may need to be annealed before using, as it could be 1/2 or 3/4 hard and it may crack or flake when you try to peen it. To anneal brass or copper, heat it to a red heat and dump it into water. Don't try to pick it up the hot material with pliers, as it will deform because it's soft when hot.

A more deluxe version of this rivet-making fixture might include a couple of alignment pins. You might want to do a little experimenting to see how this method of using copper wire works for riveting and have the rivet-making fixture sitting in your toolbox for when you need it. It's an effective way to get a few rivets fairly quickly. Obviously, if you want to install lots of rivets, it would make more sense to buy a box of them.

> In December 2014, I made six copper flat-head rivets with this tool to fix the steel edge on our plastic snow shovel, which is just about the best snow shovel I've ever used. The original edge had fallen off by continual use against concrete (the concrete "filed off" the rivet heads) and I made a new edge from some scrap steel. I originally attached it with pop rivets, but these quickly wore off and the edge fell off. The new copper rivets are flush with the steel and should last as long as the steel does.
>
> By the way, that snow shovel gets a lot of use all year around, as I use it to pick up leaves in the fall, pine needles, and loose dirt. In soft, moist dirt, it works really well to move dirt around, just like a bulldozer.

Since solid copper wire is pretty easy to get, here are some diameters and relevant screwball US drill sizes to make copper pins:

AWG gauge	Dia., mils	Nearest drill size	Dia, mils
4	204.3	#5	205.5
6	162.0	#18	166.0
8	128.5	#30	128.5
10	101.9	#38	101.5
12	80.8	#46	81.0
14	64.1	#52	63.2

Some of the holes are a bit undersize, but this isn't a problem, as you'll just pound the pin into the hole anyway. If you're going to use a lot of #6 wire, I'd suggest making a 0.162 inch reamer from a #20 drill (see *Make a custom-size reamer*).

For temporary fastening, use a chunk of solder from a roll. Common solder wire sizes are 1/16, 3/32, and 1/8 inch diameters. The solder is easy to upset with a hammer and a wood chisel will cut off the head when you're finished with it. If you're interested in appearance, use solder that doesn't have a flux core, as you'll see the flux after you're finished.

You can buy soft aluminum wire from the local home center used to tie chain-link fence to its steel posts. These are typically about 6 inches long with a hook on the end. The few that I checked were made from aluminum wire between 0.111 and 0.112 inches -- it was a slip fit in a #33 hole. This material upsets easily and thus makes useful aluminum rivets.

Your local welding supply will have copper plated mild steel rods in various sizes and these can be used to make steel rivets. Ask if they have soft brass brazing rods without flux on them -- these can make rivets too after annealing.

In a pinch, use an old .22 case and a ball from a ball bearing to do some light-duty riveting. You may want to anneal the case first (heat it to a red heat and drop it in some water). Use an annealed rimmed rifle case like a 30-30 for a larger rivet that will also get some second glances.

Filing buttons

Filing buttons are hardened steel disks that are attached to a corner of a workpiece. Then a file is used to round the corner:

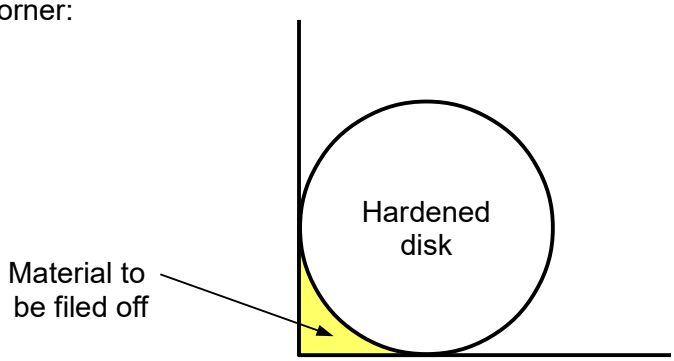

The file will skate along the button. You can also make such filing buttons from plain steel and case harden them with something like Kasenit. They're usually C-clamped to the work for speed and aligned by eye. That yellow area, by the way, is called a spandrel.

Centering in a 4-jaw chuck

I had chucked some 1.5" diameter brass bar stock in my 4-jaw chuck and grabbed the dial indicator to get it centered. But the Starrett dial indicator picked that moment to quit working after 30+ years of use (my other Starrett indicator of the same model had failed decades ago). I had another indicator, a 0.0001" indicator I only use for delicate/fine stuff, so I thought I'd use it to get the work centered. Unfortunately, the shaft to the adapter to use this indicator was just slightly too large to fit into the indicator's adapter sleeve's hole. I needed to turn it down slightly before I could use the indicator, but I didn't want to upset the work I already had in the lathe.

What to do? I put a lathe tool bit in and centered things by watching the work wobble with respect to the tool bit. Since this tool bit happened to be a cutoff tool, it occurred to me to use a shim between it and the work. I tried this with an index card and it seemed to work. You move the shim back and forth, feeling for resistance. While moving the shim, you rotate the chuck and find the spot where things bind up the most. Then you loosen the chuck jaw on the opposite side. Feed the tool in slightly as things get closer to centered. This is the same technique as using a cigarette paper.

Once the indicator was mounted, I tried this technique to center the 1.5" diameter brass. I used a steel rule that was 0.015" thick. It's slower than using an indicator, but it does work. When I felt I had things centered, I checked it with the tenths indicator and found it was 0.8 mils TIR. Not bad.

But then a better method occurred to me.

A better method: silhouette

Put a cutoff tool in the tool holder and bring it up near the work. Then put a white 3x5 card on the lathe carriage and shine a light on the card, but not on the work/cutoff tool. ***This puts the gap between the tool and the work in silhouette***, giving excellent contrast. You then proceed to center things by turning the work and visually looking for the smallest gap -- adjust the cross feed to get near-contact at closest approach. Then the jaw opposite this point needs to be slightly loosened and the opposite jaw tightened.

I've done experiments that prove I can center things this way to less than 0.001 inch TIR. My best effort was on a piece of 1-7/16 hot-rolled material that had a 1-1/8" diameter turned on the end. I centered it using this method (about 3 or 4 jaw adjustments, so it went quickly) and then, out of curiosity, checked it with my 0.0001" dial indicator. It barely moved a tenth of a division (i.e., virtually no detectable movement), yet I could see small variations in the OD by the gap's silhouette when the cutting tool was 1 or 2 mils from the work. It appears to be a quite sensitive technique and, since discovering it a month or two ago, I've not used a dial indicator for centering since (update Dec

2018: I've been using this method for years now and I still haven't fixed those two failed Starrett dial indicators). In fact, most stock isn't good enough in roundness and surface finish to utilize the full potential of this method.

You can qualitatively calibrate your eyeball by using the same illumination to put some micrometer jaws in silhouette. Then set various gaps and compare to what you see with the cutoff tool. Note you'll want the cutoff tool to be sharp and have its front edge parallel to the lathe's rotation axis.

No doubt zillions of other folks have found this technique over the last century or two, but I've never seen it written down. It's quite a good method -- give it a try.

A variation on this technique is to mark the OD of the work with a blue or black Sharpie marker. Then bring the cutting tool to just where it scrapes off a very light cut. That's a high point, so adjust the opposite jaw. This method is usable for centering in a bore where the light and index card can't be used.

If you have a continuity tester (it can be as simple as a battery, resistor, and LED), you can use it to center metal workpieces. Insulate the probe from the lathe's metal, the check for continuity between the probe and the lathe's metal (the workpiece is grounded through the spindle bearings). It's a little faster than the silhouette method. Using either method, you'll find you don't need a dial indicator for centering things anymore.

Using a dial indicator

The dial indicator often used at a lathe is the test indicator with, say, a ±0.01" range. It is used in the same fashion as the above silhouette method to do centering.

If the work is substantially uncentered, you can use a dial indicator with a 0.5 or 1 inch range. Rotate the chuck one full turn and find the minimum reading. Set this location to zero. Then turn to the maximum reading. Divide this number by 2 and turn the chuck until this number is read on the dial. Zero the dial to this value. Turn the chuck to get the maximum reading. Loosen the jaw on the opposite side and turn the jaw on the operator's side to make the indicator read as near zero as you can. Repeat as needed.

Stripped screw heads

From the standpoint of stripping, the two worst screw head designs are the slotted screw and the Phillips head. Yet they still get used a lot, so it's not unusual to have a problem trying to get a screw out. Here are some tips.

For slotted screws, your best strategy is to get a hollow-ground screwdriver bit that exactly fits the screw's slot, both width and length. Most screwdrivers sold are crap because they're not hollow-ground. You can either learn to grind such a tip yourself or buy a gunsmith's bit set from Brownell's. Gunsmiths usually only come across slotted screws in guns and they can be fiendishly difficult to remove, so these expensive bit sets can pay for themselves quickly.

Another tip is to put some kind of abrasive in with the screwdriver tip (this works for any head type, not just slotted). You can buy anti-camout Phillips bits that have teeth in the tip to try to help grip the screw better. There are also bits that have diamond or carbide dust on the tips to help get a better grip. I've never found such things terribly useful.

For the best chance of success getting a fastener out, get a 3/8" or 1/2" square drive manual impact wrench (the type you hit with a hammer) and a suitable **impact-rated bit** that fits the screw you're trying to remove. Then give it a solid whack with the hammer to try to remove the screw. This provides a sharp turning torque and it drives the bit deeper into the recess.

Just about the worst screw for making a deck is a long steel screw that will rust over the years that has a Phillips head. We paid a guy to build a deck for us and had to learn this the hard way (he used hundreds of crappy fasteners that rusted out). I have to use a tool called a Grabit bit to get these Phillips head screws out:

The right-hand end is a drill bit that you put in the stripped-out Phillips recess to drill a hole. Then the left-hand end is a left-hand helical tapered thread that will tighten in the drilled hole when you try to back the screw out (it looks like a miniature Eze-out with more taper). With care, these bits can work when everything else has failed; they're made from high speed steel. Every summer I'll take out a number of the old rusted Phillips screws and put in Torx-head screws. They'll work on a variety of screw heads like Robertson, Frearson, Pozi-driv, etc.

I'm also fed up with square drive (Robertson) screws. They're a tiny bit better than slotted or Phillips, but they too can strip out without warning when you're using a powered drive (and, if you've got a lot of screws to drive and are enjoying the benefits of arthritis, who wouldn't use a powered drive?). You can use these Grabit screw extractors to get square drive screws out too. I also don't like square drive screws because the sockets are tapered and the bit can jam in the screw, slowing your work down.

If you do have to use slotted/Phillips/square drive screws, maximize your chances for being able to remove them. Drill pilot holes and clearance holes for the shanks. Lubricate the screw threads when driving them in (use e.g. paraffin wax) and make sure you don't strip the head when putting in the screw. If you do, remove it and drive in a fresh screw with an undamaged head. Use stainless steel screws if you can to avoid rust, although stainless screw heads can strip more easily than heat treated steel.

I use Torx-head screws now nearly exclusively in wood. They never strip except when e.g. a small particle of the coating material is at the bottom of the socket and the bit doesn't go in all the way. If I put in a screw that seems to have the socket damaged slightly, I'll remove the screw right then and there and put another one in. I've built fences that use these Torx screws in 1.25" lengths to hold on the slats and I've been able to easily remove the screws a decade or more later. Interestingly, the modern coatings on these screws lets me reuse them, so old screws get tossed into the container of new screws. Never use galvanized screws or similar coatings, as these things always rust out in a few year in outdoor stuff.

Dividing a board

This technique goes back millenia, but it's not as well-known as it should be. To mark a board in half, stretch your tape measure or rule across the board, at an angle if necessary, and make it have an odd number of division marks across the board. Then mark the middle of the board at the middle mark.

Example: the following board has the tape measure stretched to indicate an even 6 units across the board (i.e., 7 divisions including the zero mark). Mark the middle of the board at 3 units:

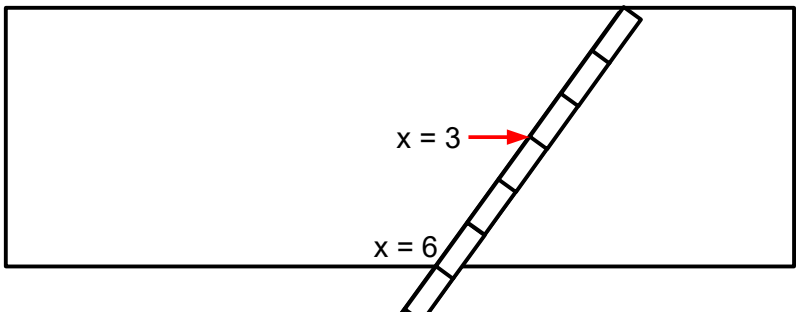

Check the method first with respect to the tip, as you may not be marking the exact center. To offset this, put the tip on the other side and mark it in the same way. If the marks aren't at the same position, use the half-way point as the center.

It easily extends to n equal divisions of a board's width -- just make n + 1 divisions across the board a multiple of some easy-to-see division on the tape measure. Example: in the above picture, if you wanted to divide the board into 5 equal widths, use 6 divisions. Then make a mark at each unit division. The method is usually called **the draftsman's method**, as all draftsmen know it and use it.

You can also use dividers to divide a linear or even curvilinear distance into an equal number. The problem with dividing a board with dividers is that there's no convenient zero reference because it's the edge of the board. If you can butt up another board next to it and the edges are sharp, then using dividers can be a viable method.

I usually use hermaphrodite calipers to find the center of stock. Set the calipers to the approximate half-width and scribe a line from either side. The middle of the scribed marks is the center of the board. The same method works for finding the center of round stock or stock with a regular polygon cross section.

A similar technique works with a combination square set to about the half-width.

To divide a curvilinear arc into n equal pieces using a pair of dividers, estimate the total arc length s and set the dividers to s/n. Place the point of the dividers at the end of the arc and step off n points. If you don't reach exactly the end of the arc, adjust the dividers and try again. The method is intended to be used on curves with gentle curvature (the radius of curvature of the curve should be substantially larger than the setting on the dividers); it's not hard to construct an example where the method will fail:

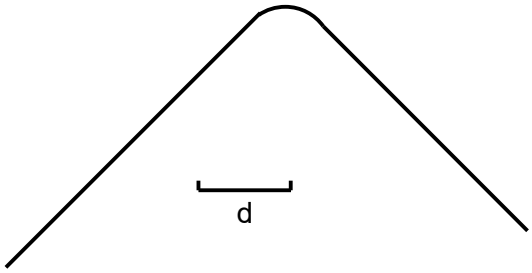

where d is the desired increment.

An **even faster method** of dividing a board in half is to use a drafting rule. The typical engineering drafting rule in decimal inches will have the 10 and 20 scales. Measure the board width with the 10 scale and mark this width on the 20 scale, which will be exactly half and no computations are needed. A metric drafting rule (such as the Alvin 760PM) will have 1:1 and 1:2 scales that do the same thing.

> By the way, there are pedants who insist that machinists use *rules* and draftsman use *scales*, but they probably haven't worked in typical industrial environments: the terms are used interchangeably and nobody cares what you call them. Most folks just call them rulers.

Magnet on tailstock

I use some little 1/4" diameter neodymium magnets on my lathe's tailstock. One holds a 6" rule, one is used to clamp the sketch of what I'm making, and the third holds the center gauge.

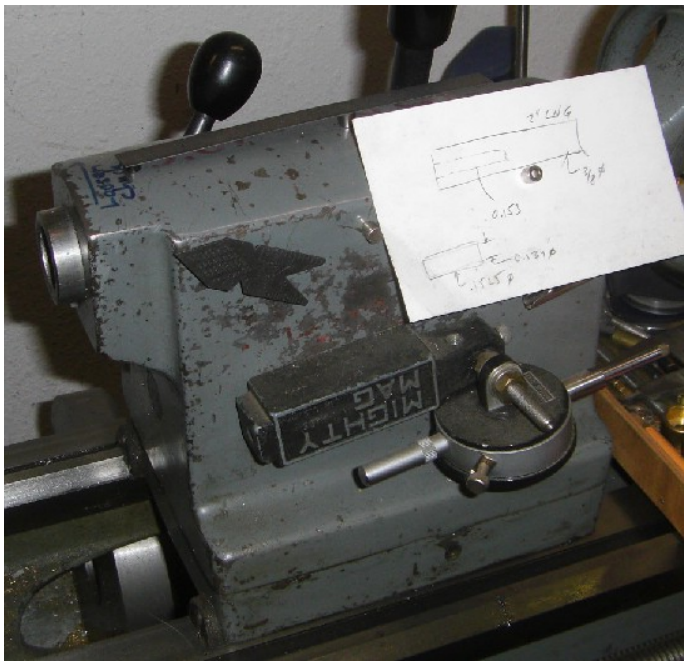

I use a number of these little magnets on my tool chest to hold the 1/4 inch hex bits I use a lot (T20, T25, and Phillips).

In fact, when a friend moved back east, he left me a whole bunch of these little neodymium magnets (he had purchased an assortment). They find all kinds of uses in the shop.

Quickie vee blocks

If you have some angle iron, you can make emergency vee blocks. The first design uses two chunks of identical material:

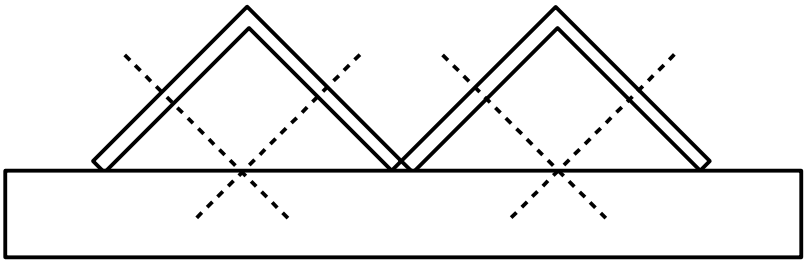

Screw them to a board with countersunk flat-head screws, as shown by the dashed lines.

Another design uses three pieces of material; fasten them together with countersunk flat-head bolts or rivets (see Riveting):

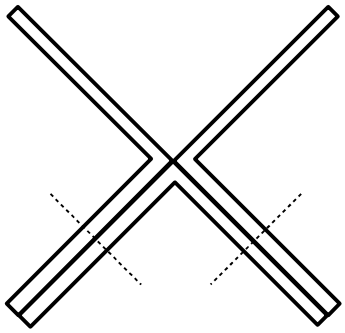

Finally, you can cut a vee in a 2x4 on the table saw, then embed a chunk of angle iron:

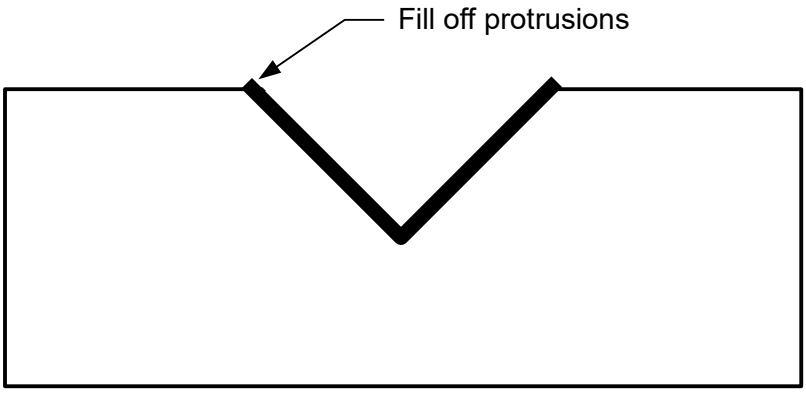

In fact, this vee block made from a 2x4 will find a lot of use around the shop, even if you don't line it with a chunk of steel.

Fast wire rope eye splice

From Popular Mechanics, Jul 1970, pg 176. For a fast-to-make splice wire rope, get a suitable length of copper or brass tubing, anneal it (heat bright red and quench in water), and clamp the tubing and wire rope in a vise. Twist with pliers.

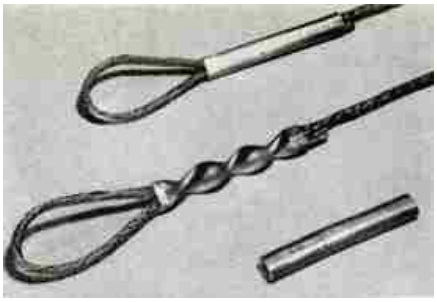

I've used this a few times around the yard when I haven't had suitable aluminum pieces to crush onto the wire.

Screw gizzy

Machinists often make a tool such as the following for working on screws:

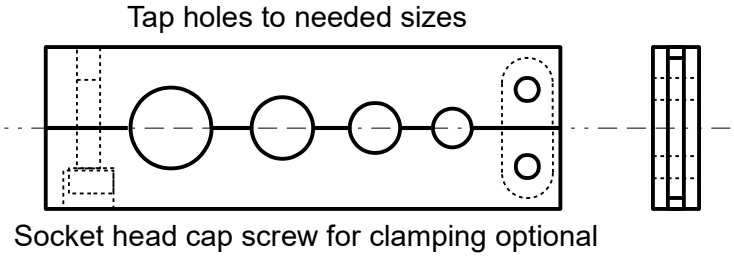

Two rectangular blocks of steel were joined together with a pinned link; this let the two blocks pivot with respect to each other (round the inside corners off for clearance). Clamp the two blocks together with a sheet of paper to give 2 to 3 mils or so of separation. Drill and tap the holes with the thread sizes you'll work on.

Once made, the device can be clamped in a vise to hold a screw. Fancier versions include a pinned screw/nut or just a bolt that can clamp the two pieces together so that you don't need the vise to clamp a screw. Use e.g. a recessed socket head cap screw and the assembly can then be held in a milling vise for working on a screw.

Instead of making a hinge, you can just use a couple of socket head cap screws to hold the assembly together.

Make it from two chunks of keystock.

It's also handy to make such tools to hold common stock diameters. For a useful tool that's easy to make, grab a short chunk of 2x4, rip it in half, insert a couple of index cards, then drill it out to fit 1/2 and 3/4 pipe.

I also use the following gizzy in my lathe for holding threaded parts:

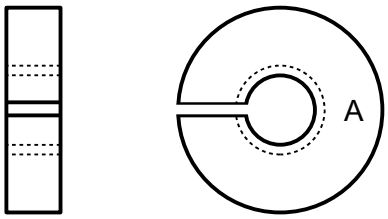

The hole is drilled and tapped and the slot is cut with a small saw. This piece is then grabbed in a collet or chuck to machine a screw. For easier clamping, extend the saw cut into side A. I usually make them from brass, aluminum, or PVC. Make them from hex stock so they're easy to hold in a vise.

Handy cutting tools

I use an Aloris-style toolpost in my lathe (see note below) and use it with little cutters made from drill rod. I clamped two pieces of brass separated by a piece of paper and drilled a 1/8" diameter hole through them. Then a 1/4" diameter hole followed that half way through. The result was the following holder. You can see some heat-treated bits that are used to cut semicircular grooves (one is 1/4" diameter, the other is 1/8" diameter):

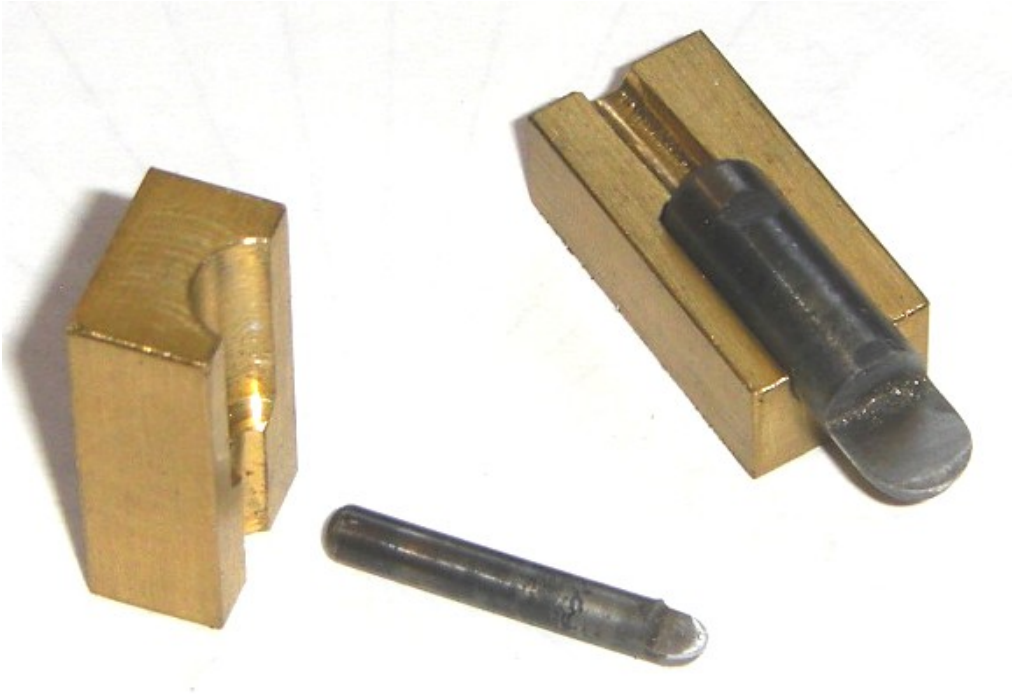

They're made from drill rod. This is easier, cheaper, and faster than e.g. dedicating a 3/8" HSS tool bit to cut one radius and works well on the softer metals. Of course, you use the lathe to shape the cutting bit to the desired radius. I usually file the size by eye, but you can use radius gauges for

better work. Harden and finish grind or stone them.

If you rotate them 90° about the cylinder's axis from the normal cutting direction, you can use the longitudinal feed to cut longitudinal grooves (feed by hand, obviously). It goes relatively quickly and I found I can increase the cutting depth for each cut around 5 mils for cuts that aren't too deep in aluminum (use oil for a better cut). You can also hold cutters whose axis is parallel to the lathe's axis and use this to "broach" square and hex holes by feeding longitudinally. To register the rotation of the spindle, tape a strip of paper around it that has marks at the proper distance. Use a magnet to hold a wire to set to the index mark. It's cheap and simple, but a bit slow. It does the job adequately if you don't have a mill and ball-end cutter.

From the early 1960's for about the next 20 years, I used my grandfather's lathe with the slipper/post tool holding method. It works, but has some significant problems. When working in some high-tech companies in Silicon Valley in the 1970's, I occasionally was able to use some lathes that had the Aloris-style toolpost. I was immediately taken with the superiority of the design and bought such a toolpost and tool holders from Enco for my lathe in 1980 after moving out of California. It's such a superior design that once you've used one, you'll never go back to the old slipper/post style voluntarily.

Fixture for making wedges

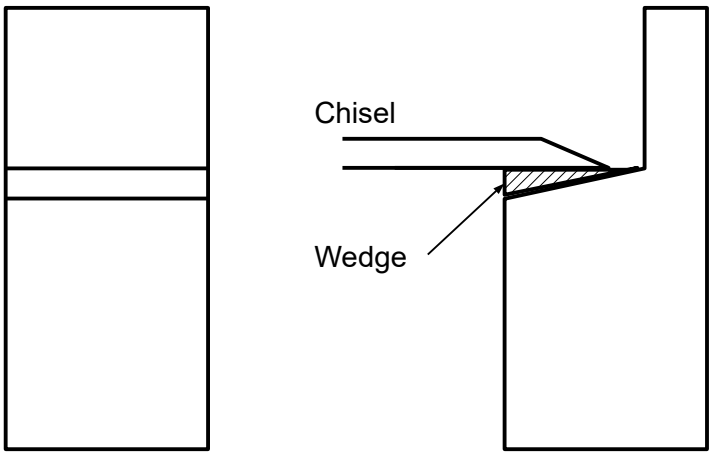

Hold it in the vise and use a horizontal chisel to shape the wedge.

If you have to make a lot of wedges, it's faster to cut them on the table saw or bandsaw with suitable tooling.

Too-deep countersunk holes

If you accidentally countersunk some holes for flat-head screws too deep, grab a flat washer and pound it into the shape of a cup washer in a countersunk piece of scrap using a flat head screw. The washer can then be used as a filler for the too-deep countersunk hole.

Notched screws

If a large machine screw with a crummy head (e.g., a slotted or Phillips pan head) may need to be removed later and might be difficult to remove, file a notch in the screw head so that a punch can be used to turn the head:

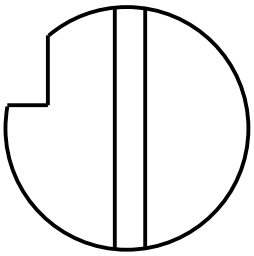

I read this somewhere (probably Brownell's *Gunsmith Kinks*), but now can't remember where it was.

Installing screw eyes

If you have lots of screw eyes to install, here are some tools you can make. The following picture came from pg 350 of the August 1930 *Popular Mechanics* and is made from a bent piece of bar stock:

Another approach is to put a slot in the end of a chunk of hex stock and put an o-ring in the other end. This tool can then be held in a socket (the o-ring provides the friction to hold it in the socket) and ratchets, etc. can be used to drive in the screw eyes. Here are some examples:

The two screw-eye tools on the left were made from 1/2" hex and 3/4" hex. The two tools on the right let me turn a 1/4" square drive or 3/8" square drive socket with a 1/2" wrench. The o-rings hold the tool by friction in the socket. These were made 30 or 40 years ago when I had a lot of brass stock around -- brass isn't cheap anymore!

Another way to make a similar driver would be to cut a slot in a suitable deep socket.

If these screw-eye tools slip off the eye, you can make a collar that fits over the outside. Wrap a piece of sheet metal around the piece and tie a constrictor hitch to hold it in place.

There are also commercial tools made for driving screw eyes, but it's more fun to make your own.

Finishing threads, etc.

After threading in the lathe, get a piece of soft wood, dip it in oil, then a suitable emery or pumice powder and chase over the threads to get a good finish. Of course, this is also usable on plain turned surfaces too. [*tmbr*]

Removing a Schrader valve

If you don't have a tool to remove the core from a tire valve (Schrader valve), you can file a suitable cotter pin to shape and use it with a pair of pliers.

Sharpening a carpenter's pencil

Sharpen it on both ends. Then it's ready to write no matter how you pull it out of your pocket.

Centering a rip

A relatively common task on a table saw is to rip a board exactly in half. Here's a way to set the fence. Measure the board's width W and the saw blade's kerf K. Set the edge of the saw blade to (W + K)/2 from the fence. This will get you close to the proper setting. Then start the saw and just touch the blade to the end of the board, making sure the board is properly aligned with the fence. Flip the board 180° about an axis parallel to the fence and just touch the blade to the end of the board again. Use a square to check whether the edges of the two cuts are aligned. If not, adjust the fence by half of the misalignment and try again. Use a Sharpie marker to cover the cuts with ink so that you can see the new cuts.

I use this method to cut 2x4s that are 8' long in half. I have junk behind the saw that doesn't let me push a full 8' board through the saw, so I have to flip the board around and cut half at a time. This method ensures that the rip will be close (it's rarely perfect, as 2x4s are never perfect boards).

A similar technique can be used on other things. For example, to drill a hole through the center of a board, butt the board up against a fence and touch the drill tip to the board. Flip the board 180° about a vertical axis so that the other edge is against the fence and touch the tip again. The center of the board is halfway between those two marks. For careful work, stick a 1/4" rod with a 60° point in the chuck and use it to mark the work (it doesn't need to rotate).

To center punch some round stock, get some hermaphrodite calipers and adjust them to approximately the stock's radius. Scribe four arcs meeting at the center, putting the leg of the caliper at the OD about every 90°. Interpolate the center point.

For a board with two edges parallel, set your combination square to about half the board's width. Scribe a pencil mark from both edges against the end of the rule. The center point is halfway between the marks. The square's blade can be a little long or short, it doesn't matter.

Regulators for compressors & welding

In the 1960's I bought a Union Carbide torch set for acetylene welding; this included regulators, hose, and torches. The instructions strongly recommended that you always unscrew the tension on the regulator adjustment when you were finished with using the torch. **This is superb advice** -- I've always done that and these regulators are still working fine 50 years later.

I've also use the same practice with an air compressor that I've had for the past few decades and it's still working fine too.

Reader's Digest books

We've had the Reader's Digest books on *Do It Yourself* and *Fixing Things* (I'm too lazy to go find the actual names) for a few decades and they are excellent books. They will pay for themselves the first time you fix an appliance or do something non-trivial around the house. One of the biggest advantages is that they explain how something works and what the typical things are that go wrong with it. My wife and I can usually fix almost anything if we know how it works and can make or buy replacement parts.

In the 32 years we've lived in our current house, these are the only times we've paid someone to come and work on the house:

- ♦ Run a new plumbing line from under the house, under the driveway, and out to the well. I had determined by careful experimentation that there was an underground leak between our well's pitless adapter and the house.
- ♦ Connect our house to the sewer.
- ♦ Rebuild our oil-fired furnace combustion chamber (this is a job for a pro).
- ♦ Fix the dishwasher.

The time the repairman had come to fix the dishwasher really bugged me. In the late 1980's, my wife had picked out a fancy dishwasher from Sears with an electric control panel and lots of features. Just out of the warranty period, the electronics failed and the dishwasher stopped working. Sears would happily sell us a new PC board for the dishwasher and they wanted about 75% of the cost of a new dishwasher for that simple little PC board. It was early 1970's technology and couldn't have cost more than $5 to make, so I learned my lesson very quickly. We replaced that dishwasher with a Maytag washer with mechanical controls and it has worked flawlessly since.

> Those fancy appliances with lots of electronics just have lots more things to fail. And you're going to have sticker shock when you find out how much it costs to get the thing fixed or buy replacement parts. If you do decide to buy such a device, at least find out what the cost is of replacing key components and be willing to factor this into the total cost of ownership.

Update Sep 2013: this lesson was once again driven home when our Amana microwave oven quit working. I bought this oven in 1985 and it failed once in the early 1990's (it needed a new magnetron tube and it cost us $60 to have it repaired). Now, to put this in perspective, a few years ago one of my daughters gave my wife a new Panasonic microwave oven as a Christmas gift one year. The thing worked for a year and failed literally two or three days out of warranty, straight out of a cartoon (or it was in cahoots with the Sears dishwasher). A web search showed that the failure code was pretty common and was probably a class design problem. I certainly couldn't fix it and a local repair place would probably have charged more to fix it than it originally cost (my daughter got it heavily discounted). Thus, it got disassembled into parts for my scrap bin. Fortunately, we hadn't gotten rid of the old Amana microwave, so it went back into service and worked fine for a few years until Sep 2013, when it failed to turn on.

I opened the thing up and had to do some tests to figure out what was wrong. Fortunately, there are no "electronics" inside the thing -- it's all microswitches and cams with synchronous motors (World War 2 technology). I powered up the cam motors and verified they were working OK, so I was led to the fan assembly being bad, as the fan wasn't coming on. The fan was hard to turn, so I figured it needed oil. I was able to get oil to the rear part of the motor, but I couldn't get to the front part of the motor without more disassembly that involved drilling out a rivet. I put things back together, but it didn't work, so I was forced to remove the rivet and disassemble the fan assembly (this also required exposing the magnetron tube). I found the problem, which was that the mechanism of attaching the fan blade to the motor's shaft wasn't a good design (it only worked for a few decades). I was able to fix it by making a special washer with a D-shaped hole and making a small thingy with a set screw to clamp to the shaft (this is in the microwave path and I was concerned about another piece of metal in there, but it seems to work OK). I put it all back together and it worked great. Oh, and this was

done with no documentation or schematic, a testament to a simple and rugged design made with quality components. This microwave is still working in May of 2019, 34 years after it was purchased.

Now, how many modern appliances with electronics can you do this with? **NONE**. Oh, if you're an EE with access to firmware, hardware, schematics/documentation, tools (both mechanical and computer), and sufficient time, you could probably figure it out. But that rules out virtually every consumer, so your only choices are to pay for a repair or buy a new one. **I'll take this old World War 2 technology any day**, as it will still be working when I'm gone -- and it can continue to be fixed as long as parts can be bought or made. Hmmm, maybe I should buy a spare magnetron to have it on-hand against the day it chooses to fail -- it's pretty easy to replace.

Another update: one of our granddaughters spent the night, so my wife pulled out our old waffle maker to make her some waffles for breakfast. This old thing looks pretty beat up, but it's just because it's a bit dirty because it has been used a lot in the last few decades. It was a wedding present to my mother when she was married in the early 1940's. About 30 years ago I had to fix a broken Nichrome wire inside, but that's all that's ever gone wrong with it. So it has been giving good service for over 70 years. And I'll be able to fix virtually anything that goes wrong with it. It will be passed on to my descendants.

Pea shooter

In college, a friend and I made some "pea shooters" that a guy had told us about. The idea was simple: a length of 3/8" ID drawn-over-mandrel steel tubing with a 3/8" rod that slid inside the tubing. One end of the rod was flush with the end of the tubing and the other end threaded into a chunk of 2" diameter knurled steel bar stock with a lock nut; this made it a slide hammer. A nail could be put into the tubing and the pea shooter was positioned where you wanted the nail to go in. Then it was a simple matter to drive the nail in. The nail never bent. This device could let you stand on the floor and put a nail into the ceiling without a ladder and put nails where there was no room to swing a hammer.

It's not a new idea. Here's a similar idea made from some bar stock and tubing (from *Popular Mechanics*, Feb 1921, page 317):

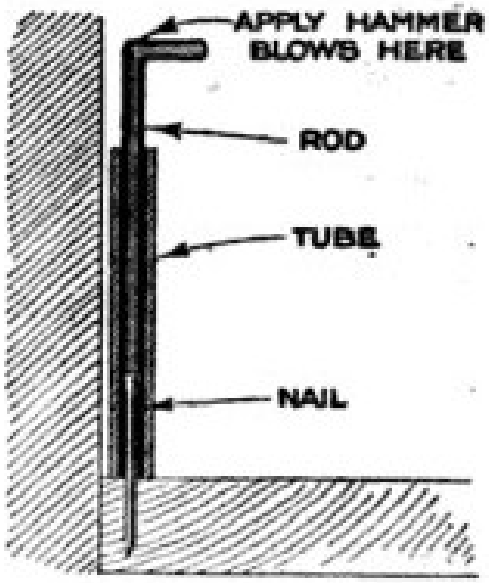

A number of decades later my friend surprised me by giving me one of these pea shooters -- he had some friend polish it and chrome plate it all over (it's beautiful). It gets used once or twice a year (I rarely use nails anymore since the Torx-drive self-drilling wood screws became commonly available).

Bull's foot file

Epoxy a file into a groove with the sides about half a mil above the top of the teeth. This lets you file things like pins flush without dinging the surface with file marks. Round the ends of the file off so they won't catch on the surface.

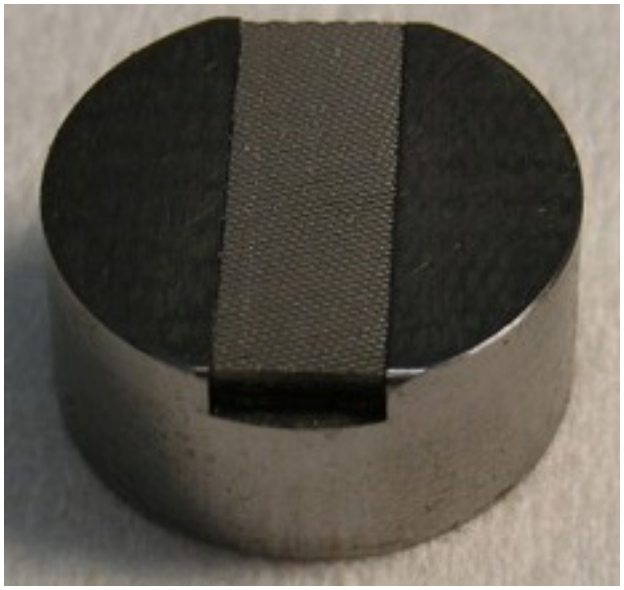

From http://www.sherline.com/tip70.htm.

Note: you can cut short chunks of file using an abrasive cutoff saw (avoid overheating, which will reduce the hardness), but a quicker way is to wrap the file with a towel, put it in the vise jaws, and hit the exposed part to fracture it off (this works because the file is hard and brittle).

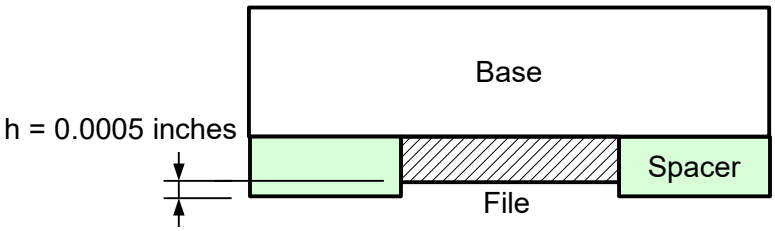

Broken sprinkler nipple tool

We have about 60 sprinklers around our house and we've standardized on using threaded schedule 80 PVC nipples in 3/4" size to connect the sprinkler to the pipe in the ground. Unfortunately, sprinklers will get hit by mowers, cars, kids, and other assorted hazards and you can wind up with a nipple that gets broken off in the fitting:

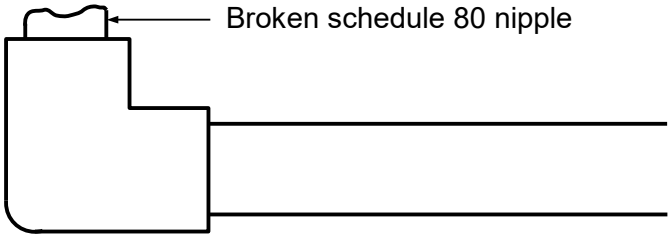

If you don't have a tool to remove that broken threaded nipple, your only options are either to make or buy a removal tool or dig the pipe up and replace the elbow.

There are a variety of tools made that can be used. The standard internal pipe wrench (those with a toothed eccentric cam), however, <u>won't</u> work because they are sized for schedule 40 steel pipe, not schedule 80 PVC.

Here's the tool I recommend:

We bought ours decades ago, so I can't tell you what they cost now (probably around $10). They easily pay for themselves in saved time. We have both the 1/2" and 3/4" sizes, but the 3/4" size sees by far the most use.

Here are some other tools, although except for the Easy-outs, I've not used any of these on PVC pipe (they're likely designed for steel pipe and probably won't work on PVC):

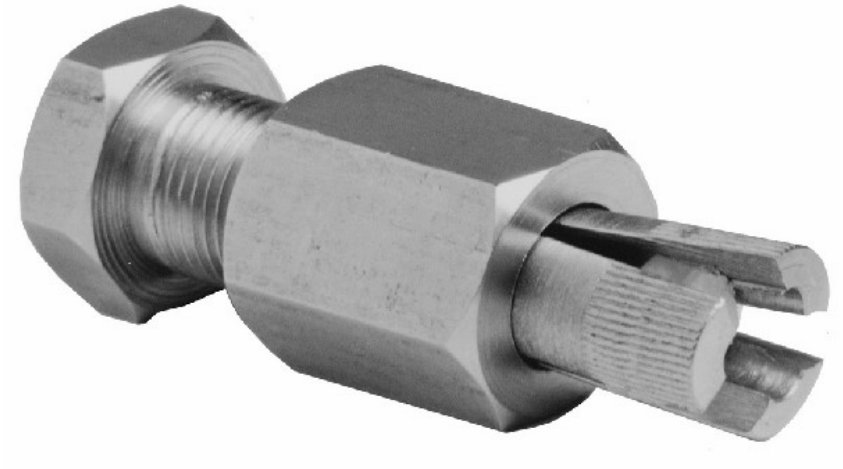

Here's part of a set from Harbor Freight for $7, although I think these would either not fit schedule 80 PVC pipe or might ream it out instead of removing the nipple:

Ask your local industrial supplier if they have some Easy-outs that will fit schedule 80 pipe (take a chunk with you to be sure). But they'll be expensive.

If all else fails, it's straightforward to make a tool. Here's one I made from a chunk of 1/4" by 1" low-carbon steel rectangular stock:

There are cutting teeth filed on the two angled edges, as seen in the following view of the right-hand end:

This took a little while to make, but only required a hack saw, vise, and file. It works fine, but you'll prefer the style above with a handle (drill a hole in the end of this thing and stick in a tommy bar).

There's one condition under which the red-handled tool I showed above will fail. Sometimes a shallow elbow with a particular nipple might cause the tool to bottom out before it gets a good grip. There are a couple of fixes. The best is to have a tapered piece of something to stick in with the tool so that it is forced against the side of the nipple and can thus bite the PVC (like sticking a toothpick in a tap groove to get a slightly larger tapped hole). You can also put a side force on the tool, causing it to lean and bite in better. However, you have to do this judiciously to avoid breaking the elbow/tee and causing yourself more work. A third technique is to grind some of the end of the tool off.

If you've got a lathe and want to make a custom tool, see *Internal wrench* for another idea.

There's another technique for getting a broken nipple out. This involves using a cape or diamond point chisel to cut out one side of the nipple. The trick is to cut deep enough to get most of the nipple, but not damage the threads in the mating part. This is easier if you can do it at your bench rather than in the ground, but it does work (I've removed up to 2" broken PVC nipples this way). Even if you can't get all the way through, it may make it easier to back the broken piece out. Chisel a flat on the end, then use a pin punch and hammer to try to loosen the nipple. Another way that works on the smaller pipes is to use the diamond point chisel to cut a vee in the internal portion of the nipple. Make it tapered and size it so you can drive in a suitably-sized cold chisel and wedge it into the nipple. Then turn the cold chisel with an adjustable wrench (I've used this on 1/2" NPT nipples; it worked well and was fast).

When the above techniques fail, you dig up the pipe and replace the elbow.

Measuring/layout

Angles via disks

A method for generating an angle uses two disks of diameter d and D ($d < D$) in contact [*mtm:12:27*]:

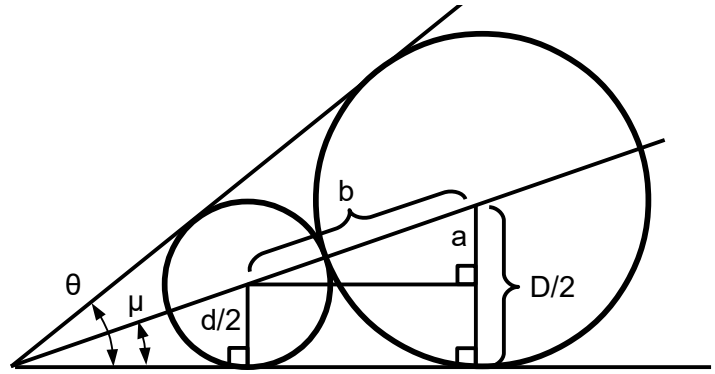

The reason this method is useful for the home shop machinist with a lathe is that the smaller disk can be e.g. a 1 inch diameter micrometer standard, which has a well-defined diameter. Then the larger disk can be turned to size as needed. The requisite formulas are easily derived:

We have $a = (D - d)/2$ and $b = (d + D)/2$. Since $\sin\theta/2 = a/c$, we get

$$\theta = 2\sin^{-1}\frac{D-d}{D+d} \tag{3}$$

This can be inverted to get

$$\frac{D}{d} = \frac{1+s}{1-s} \text{ where } s = \sin\frac{\theta}{2} \tag{4}$$

Using the 1" micrometer standard, a set of disks needed to get angles from 5° to 40° is:

θ, °	D	θ, °	D
5	1.0912	23	1.4980
6	1.1105	24	1.5250
7	1.1300	25	1.5525
8	1.1500	26	1.5805
9	1.1703	27	1.6091
10	1.1910	28	1.6383
11	1.2120	29	1.6680
12	1.2335	30	1.6984
13	1.2553	31	1.7294
14	1.2776	32	1.7610
15	1.3002	33	1.7934
16	1.3233	34	1.8263
17	1.3469	35	1.8600
18	1.3709	36	1.8944
19	1.3953	37	1.9296
20	1.4203	38	1.9655
21	1.4457	39	2.0021
22	1.4716	40	2.0396

Suppose we're measuring an angle of 20°, d = 1, and D = 1.4203 inches. The following python script using the python uncertainty library shows that the angle uncertainty for a 0.001 inch uncertainty in the diameter of both disks results in an angle uncertainty of 0.07°:

```
from uncertainties import ufloat
from uncertainties.umath import asin
from math import pi
dx = 0.001  # Diameter uncertainty (i.e., standard deviation)
D = ufloat(1.4203, dx)
d = ufloat(1, dx)
```

```
theta = 2*asin((D - d)/(D + d))*180/pi
s = "theta = %s for disk diameter uncertainty of %s inches"
print(s % (str(theta), dx))
```

For a diameter uncertainty of 0.0001 inches, the angle uncertainty is 0.007°.

One of course notices that if one had a set of the above listed disks, numerous other angles could be made by pairing the disks appropriately. However, a little experimentation with a script demonstrates that there's no obvious set of disk sizes that could be used to, say, get all angles between 0 and 45° in steps of 0.01°. Thus, this disk technique is more suited for making a few reference angles rather than a set of disks to construct needed shop angles. A sine bar will see more use and is more precise.

Measuring drill diameters with a micrometer

To get better accuracy when measuring the diameter of a drill bit, shine a light on a white index card and hold the drill and micrometer in front of the card to see the gap between the bit and micrometer's anvils in silhouette. Then you can see when you're getting close to the actual diameter at the bit's tip and measure to nearly 0.0001 inch levels. When measuring things this closely, you'll want to ensure the drill bit isn't tipped slightly, as you will then measure too big. It takes a little practice and care, but once you've tried it, it's pretty routine.

Gage-It

This is an inexpensive ($2) 0.023" thick chunk of PVC sheet with aids to measuring the size of fasteners and hardware (it measures 4.25 x 8.66 inches). It will save you time (Home Depot stocks them). It's made by Armour Technologies, Inc., in Media, PA; mine has a UPC of 1999544602 (but I bought it years ago, so it's possible the UPC has changed). Here's a picture:

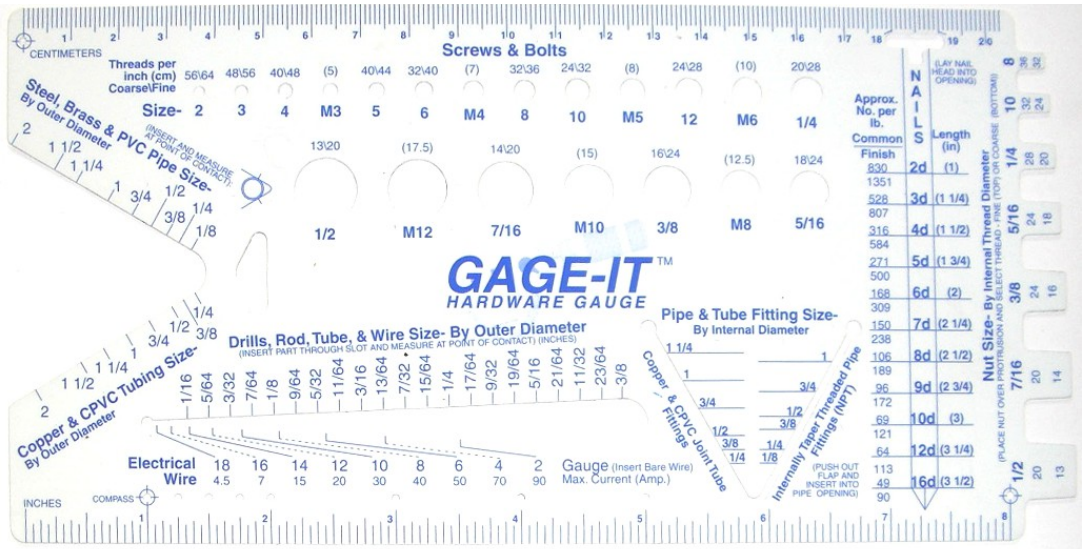

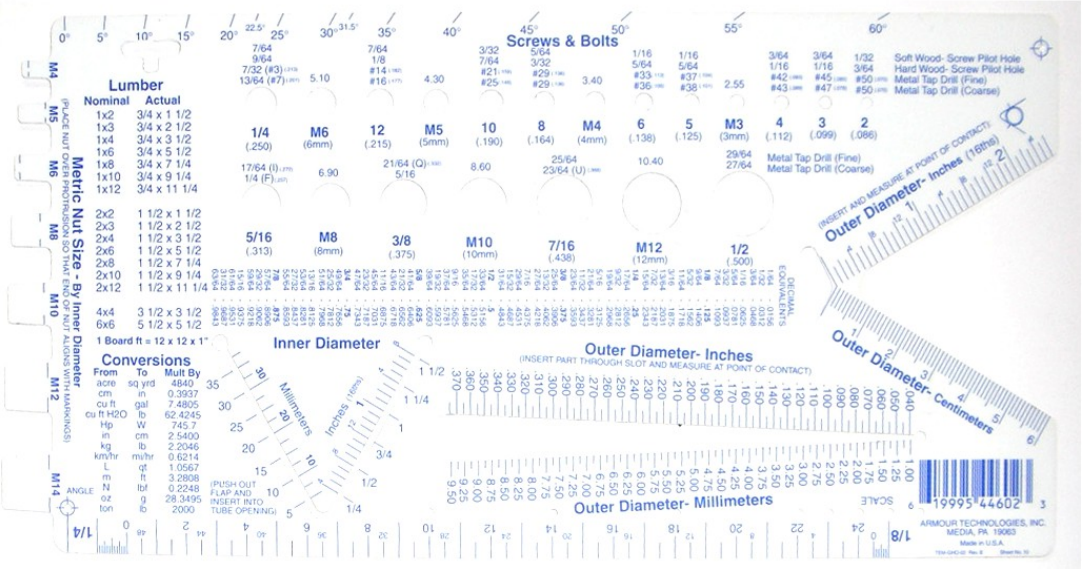

Here's a list of features:

ID	Use
A	Provides an 8 inch scale graduated in 32nds and a 20 cm scale graduated in mm.
B	20 holes to gauge the outside diameter of common US and metric screw sizes. Tap drills are given for coarse and fine threads, as well as pilot hole diameters for soft and hard woods. Number sizes: 2, 3, 4, 5, 6, 8, 10, 12. Fractional sizes: 1/4, 5/16, 3/8, 7/16, 1/2. Metric: 3, 4, 5, 6, 8, 10, 12 mm.
C	Gauge to measure common and finishing nails, assess their length and penny size, and gives a table of approximate number per pound.
D	Inner taper gauge to measure copper, CPVC, and NPT pipe fittings by inside diameter.
E	Inner taper gauge to measure inner diameters in inches and mm from 1/4 to 1.5 inches and 5 to 37.5 mm.
F	Outer taper gauge to measure outer diameters from 0.04 to 0.375 inches (in decimal inches) and 1 to 9.5 mm.
G	Outer taper gauge to measure outer diameters from about 1/4 to 2-3/8 inches (in 16ths) and about 1 to 6 cm.
H	Decimal equivalents of fractions of an inch.
J	Protractor that can measure from 0 to 60°. You should be able to interpolate to the nearest degree.
K	US lumber size table: converts nominal to actual.
L	Some common conversion factors.
M	Measures common nut sizes, both inch and metric (from #8 to 1/2 inch). Can differentiate between UNC and UNF.
N	Outer taper gauge to measure outside diameter of steel/brass/PVC pipe from 1/8 to 2 inches and copper/CPVC tubing from 1/4 to 2 inches.
O	Outer taper gauge to measure outside diameter in fractions of an inch from 1/16 to 3/8.
P	Outer taper gauge to measure wire AWG gauge number from 18 to 2. Also gives the maximum current in amperes.
Q	Compass holes to draw circles with diameters of 1/2 inch to 8 inches in steps of 1/2 inch and 8 to 14 inches in steps of 1 inch.
R	An 6 inch long architect's scale in 1/4 and 1/8 scales.

This is a handy tool for your shop if you have to put up with the screwball US sizes of things. You'll find it much faster to use this tool to find a size compared to getting a rule, calipers, or micrometer.

In particular, the taper gauges are excellent for quickly measuring a size. I checked scale F with some gauge pins and was consistently able to get within about 0.002 inches of the correct size (this takes a bit of a fine touch, however).

TAD "calculator"

In the 1960's, a company called TAD Products Corporation sold the "Universal Reference Calculator". This was a 5 inch by 10 inch plastic tool with a slide that let you see dimensions of screws/bolts, rivets, and other useful engineering data. Here's a picture of the two sides of the small version:

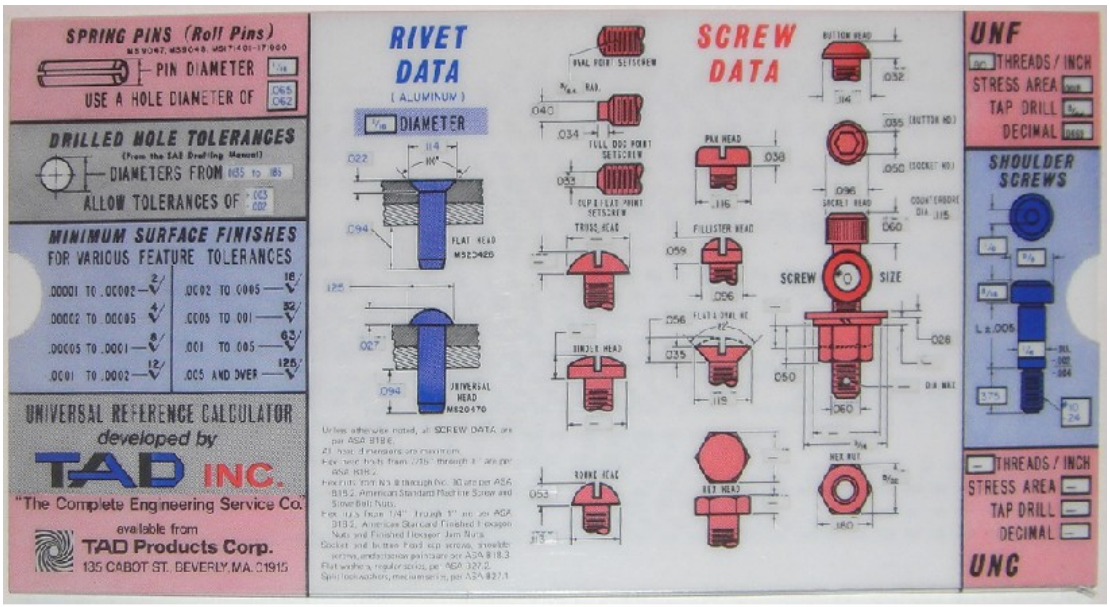

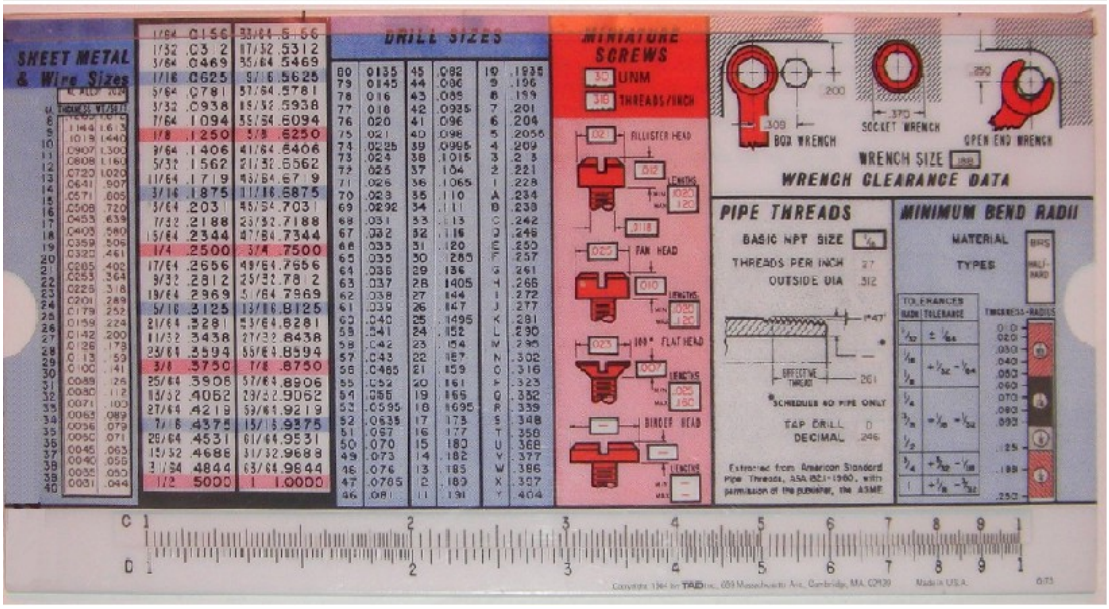

These items don't seem to be made any longer (the person who designed them probably owned the company and has likely died). In the 1960's and 1970's, you'd see these on nearly every engineer's and draftsman's desk.

The above chart was for inch fasteners and sizes only. In the 1980's, a company I worked at stocked the larger TAD chart (9.4 inches square) that included both inch and metric fasteners. The small one is more handy in my opinion and that's why it sits on my drafting board. The bigger one sits in a bookcase and rarely gets used.

It also includes a rather cheesy slide rule (C and D scales); you'll find it's not very accurate, at least for some parts of the scale. That's a shame, as such a thing is quite handy for multiplying/dividing and calculating ratios quickly.

If you do a web search on "TAD universal reference calculator", you'll come across some other businesses that sell similar things. As of 24 Nov 2013, here were some I came across:

An 8.5x11 inch calculator for $25 that includes metric and inch fasteners and other information: http://engineeringslidechart.com/index.html. This looks pretty useful, but the website's pictures aren't good enough to let you see detail.

For $19, these appear to be near-copies of the TAD chart and are sold by a company in the same city that TAD was (maybe they acquired the rights, if any): http://www.mma-engsupport.com/. This website seems to be defunct as of mid-May 2016.

MSC sells the Alvin Screw Data selector for $20. You should also be able to find it from any store that carries Alvin drafting stuff. I haven't seen it, so I can't comment on it.

No doubt web sites like ebay and antique stores will sell some of these TAD items used. I'd certainly replace mine if I lost it, as they will save you lots of time. Many folks may think that since they have Machinery's Handbook or complete tables in their computer (or online sources) that they have everything they need. However, until you've used one of these tools, you don't understand how much time you'll save over using those other reference tools, especially if you still do drafting with pencil and paper like I do.

Small circle templates

Coins can provide some small circle templates. For example, Since a US quarter is about 0.95 inches in diameter, you can drill a hole in the center and mount the quarter on a mandrel to turn it to size.

Before you think they're too expensive, take a look at how smart the US was to farm out much of its manufacturing overseas. Stuff started out inexpensive, but the prices just keep going up and up. For example, Lowes will happily sell you four zinc-plated 3/8" ID by 1.5" OD fender washers for over 30 cents each. Feel better about machining that quarter now?

Good scales

If you want a good general-purpose scale for both measuring and drawing lines, find a 12 inch or 18 inch drafting rule intended to be used with a drafting machine. These are made from transparent plastic (or sometimes aluminum) and are typically graduated to high standards. I have 4 of these rules and the scales that I have checked against my machinist rules are only off by, at most, around five thousandths of an inch over 12 or 18 inches. Vemco, for example, still sells drafting rules[11]; Mutoh is another brand name made in Japan. Here's a Vemco metric rule:

This particular rule has a mm scale and a 1/2 mm scale. The mm scale is off by about 0.05 mm over 300 mm when compared to a Starrett machinist's metric rule.

The metal ends slip into the chuck of a drafting machine, but unless you have such a machine, you can buy one without the ends.

I recommend you have at least one good rule in your shop. I'd recommend a 24" or 36" Starrett rule. It will be expensive, but it will last you the rest of your life and you can be assured that it's made to high accuracy. About 35 years ago I checked my Starrett rules against an expensive electronic measuring microscope in a semiconductor fabrication facility and found no measurable error over the length of the rules (these microscopes had NIST-traceable calibrations). The measurement uncertainty was primarily caused by the width of the graduations, as I was examining the rule under the measuring machine's microscope and the lowest power on that microscope was probably 50X to 75X. I've implicitly trusted all my Starrett rules ever since. Note that good rules (like Starrett) are hardened, tempered properly, and ground to final size. They're not cheap because it takes a lot of effort to make them.

Another tip is to try to get into the habit of measuring using the first major index mark as the zero

11 Update: Vemco closed its doors in late 2013.

mark. This helps save the end from wearing. Thus, in the above picture (assuming it was a machinist's rule), you'd start measuring from the 10 mark and subtract 10 to get the final reading. This will help your machinist rule keep its accuracy over its life, as it's common for the ends of the cheap rules to wear, causing a systematic measurement error. High-quality rules by e.g. Starrett and Mitutoyo are hardened and tempered to reduce such wear. I've measured a Starrett rule I have been using for over 50 years and can't measure any practical wear. The risk of using this offset is that you can **forget to subtract it from the reading**, leading to a systematic measurement error. Doing this is also considered good practice because it's easier to align a ruled mark with the starting feature of interest than trying to align the rule's end with that feature.

Pencil adapter for trammels

The Starrett C251 metalworker's trammels have a holder that will take 2 mm leads, but it would be more convenient to have it take pencils or a Sharpie. Here's a design I saw posted by Marv Klotz, although he attributed the design to someone else whose name I can't think of (Elmer V. is the best I can do at the moment).

The trammel's bar is 5/16" Ø, the trammels are nominally 1/2", and the axis of the trammel to the tip of the point is 3.6". A standard pencil will fit in a 9/32 hole, but I have a few pencils that are larger than this, so just to handle pencils, assume a 5/16 Ø. A Sharpie fine point is 0.49 Ø, so if you want to handle them too, the hole should be 1/2".

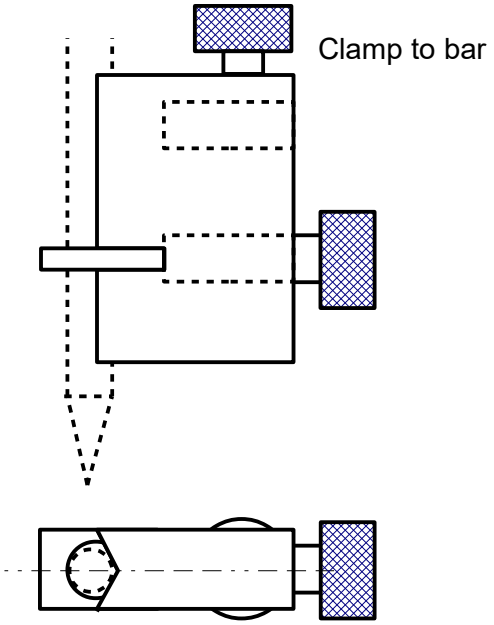

A simpler design would be a chunk of round stock with a hole through it:

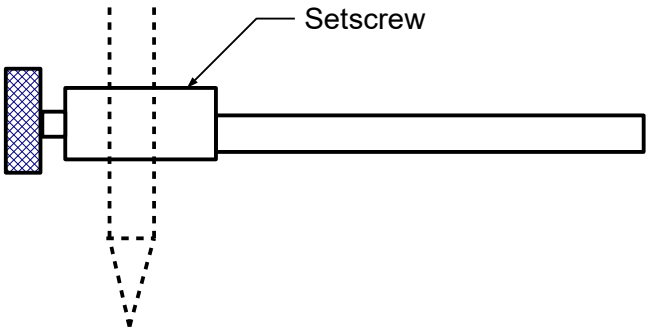

Modified level for slopes

An old wooden level is easily modified for measuring slopes:

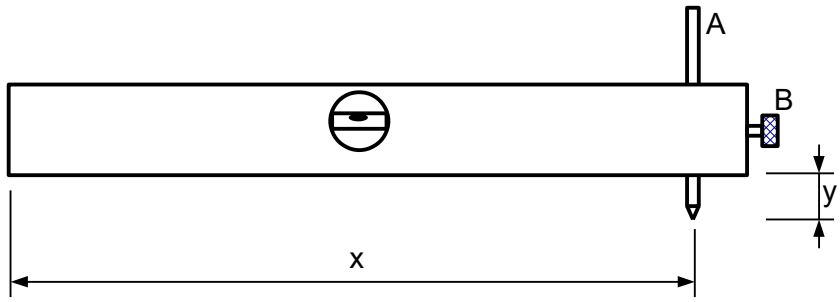

Drill a hole in the level for a close sliding fit of rod A and provide a thumbscrew B to clamp the rod in position. Carefully measure distance x, which will be a constant for the tool. If an angle of tilt off the horizontal of θ is desired, the setting y of the rod below the bottom surface of the level will be

$$y = x \tan\theta$$

For small angles, the distance y isn't large and you might instead want to drill and tap the hole and use a bolt instead of a rod. Maple is good for this, as it takes threads well.

If you don't have a thumbscrew or a method to tap the needed hole, an alternative is to use a thin kerf saw to cut the end and a wood screw to provide the clamping force:

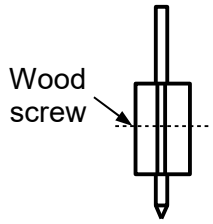

Another method is to put a slot in some sheet metal and hold it in position with a pin and wood screw:

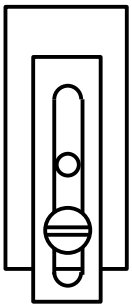

You can mark commonly-used slopes on the sheet metal.

For short levels such as a torpedo level, make a board with any of the above tilting methods and install guides to ensure the level is positioned in the same way on the board.

If you're independently wealthy, you can buy the excellent Starrett #133 plumber's level, as it can be adjusted to slopes up to 9° and has sensitive level vials (they are about 10 times more sensitive than the typical torpedo level vial). Availability from Starrett is spotty, as the demand is probably low because of the price. I have the 15 inch version and love it, but it hasn't been available for a number of years. Make sure you take your nitroglycerin before looking at the price.

Another thing to remember is that a good protractor attachment to a combination square has a level in it and can be read to about 1/4 of a degree. My Starrett #492 protractor is graduated in degrees and was able to (just barely) detect a 0.004 inch height change on a base of 5.8 inches. That translates into a 0.03° difference in angle. With a magnifying glass, I can read this protractor to about 0.1° to 0.2°, so you have a robust tool for measuring angles -- and, if you build an auxiliary board for it to measure shallow angles, you can resolve small angles to sub-0.1° levels.

Here are some measured sensitivities of various levels I have:

Level	Sensitivity, 0.001 degrees
Johnson torpedo level	97
Checkpoint laser torpedo level	74
Line level	69
Starrett combination square	36
Starrett #134 cross test level	20
Starrett #133 plumber's level, 15"	9.7
Starrett #98 level, 6"	4.6

This sensitivity represents a bubble movement of 1/4 mm, which is my estimate of about the minimum movement I am able to reliably detect.

Pencils on metal

For clean, shiny steel and aluminum, I like to use a pencil for layout of non-critical work, as it's fast and convenient. To remove a pencil mark quickly and cleanly, put a few drops of acetone on a rag and wipe the graphite/clay mixture off the metal.

mm & inches

When you're in the shop and you need to convert between these units, a calculator may not be handy. Here's how to do the conversions by hand.

inches to mm

The inch is defined as exactly 25.4 mm. To convert inches to mm, multiply inches by (25 + 0.4); here's a quick way to do this:

- Divide by 2 twice and shift the decimal point right 2 places; call the result A. This is equivalent to multiplying by 25, as you effectively multiplied by 100/4.
- Multiply the number of inches by 2 twice and shift the decimal point to the left one place to get B (this is equivalent to multiplying by 4/10).
- The answer is A + B.

Example: Convert 1.234 inches to mm. Divide this by 2 twice to get 0.617 and 0.3085. Shift the decimal point right two places to get 30.85. Multiply 1.234 by 2 twice to get 2.468 and 4.936; shift the decimal point to the left one place to get 0.4936. Add the two results to get 30.85 + 0.4936 or 31.3436. The result is exact.

mm to inches

The inverse conversion is gotten from 1/25.4, which is approximated by 1 mm being 0.03937 inches. For approximate work, use 1 mm is 0.04 inches or 40 thousandths of an inch. For a closer number, note that 39.37 is 1.575% less than 40. For most purposes, you can use the correction of 1.6%.

Here's how this rule is derived. One of the most practical approximations[12] is

$$\frac{1}{1+\delta} \approx 1-\delta \text{ when } \delta \ll 1$$

12 From the generalized binomial theorem.

Thus, we get

$$\frac{1}{25.4} \approx \frac{1}{25}(1 - 0.016)$$

Thus, we get the approximate rule: to convert A mm to inches, multiply A by 2 twice and shift the decimal point to the left 2 places (A*4/100); call this answer B. Then reduce B by 1.6%.

Example: Convert A = 31.3436 mm to inches. Multiply A by 2 twice to get 62.6872 and 125.3744; shift the decimal point left 2 places to get B = 1.253744. Reduce this by 1.6% as follows: shift the decimal point left 2 places to get C = 0.01253744 (this is the 1% part). Add half of this to get $D = 0.01253744 + 0.00626872 = 0.01880616$. Add a tenth of C to get $0.01880616 + 0.001253744 = 0.020059904$. Subtract this from B to get the result 1.2337, which is 0.0003 off the exact result.

I use my Starrett CH12-300ME tape measures all the time (I purchases 6 of them on ebay years ago for $6 each). They have decimal inch and mm scales; these allow you to do mm to inch conversions to 3 and sometimes 4 significant figures quickly.

Compass stick

Make a couple of quick cuts with a hack saw on the end of a scrap stick to make a vee that lets a pencil point ride flush with the end. Use your tape measure to layout a radius you want to scribe. Drive a nail or Torx-drive self-drilling wood screw into the stick at B and you can quickly scribe the needed radius:

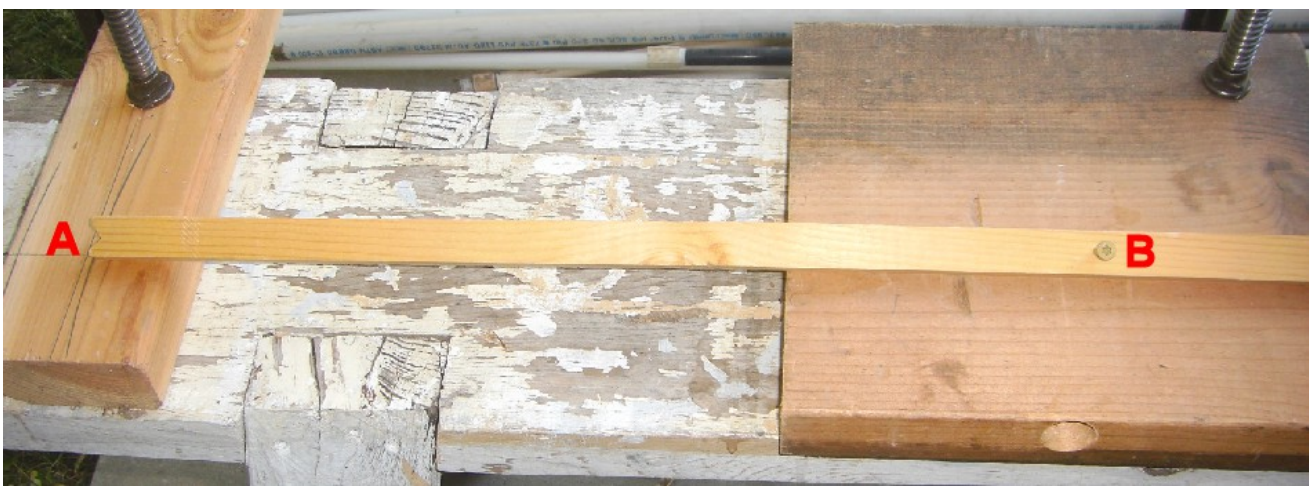

The notch at A is cut by eye; **the end is filed off until the pencil point is flush with the end of the stick** (this then lets you measure the desired radius by hooking your tape measure over the end). To scribe the radius, push the screw point into a piece of scrap wood, then register the pencil and mark. You can see two scribed arcs on the 2x4 at the left (I cut along those arcs to make the 2x4 fit the outside of a plastic drum).

A second way to make such a compass stick is to drill a hole that is provides a slip fit for the pencil you use[13]. Then cut off the end flush and square through the middle of the hole. This positions the lead parallel to the end and again lets you measure the radius with your tape measure.

With either method, you may want to attach a helper chunk of wood if the stick isn't tall enough (on a job site, just attach A to B with a couple of nails or screws):

13 A standard pencil has a 1/4 inch hex cross section. The circumscribed circle is $2/\sqrt{3}$ times this or 0.289 inches in diameter.

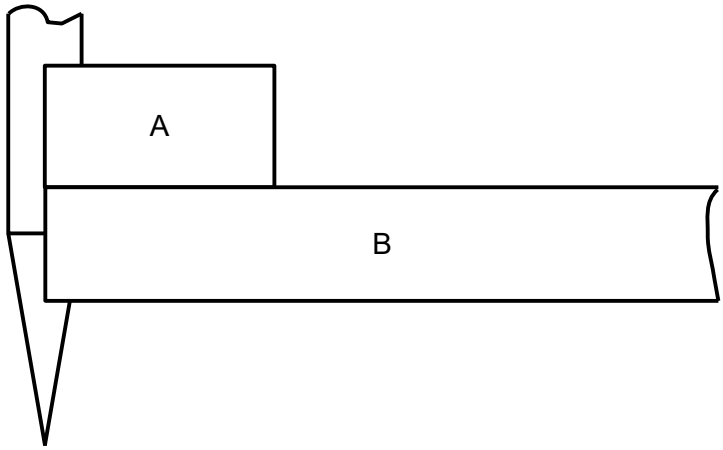

With the shorter stick B, the pencil can tilt because the pencil isn't fully indexed against the end of the stick. With the helper chunk A, the pencil doesn't move.

Of course, you can make a nicer unit and keep it in your toolbox, but I consider this a throw-away tool that you make as needed from scrap -- and it only takes a minute or two to make.

Trammels

The preferred tool for this type of scribing is a set of trammels, as they are easily adjustable and you attach them to a scrap chunk of wood (you don't store the wood, so they take up little space in your toolbox). You can buy or make. Here's a design that you can make from some aluminum bar stock (make it from a hardwood in a pinch), some thumbscrews, and a couple of nails.

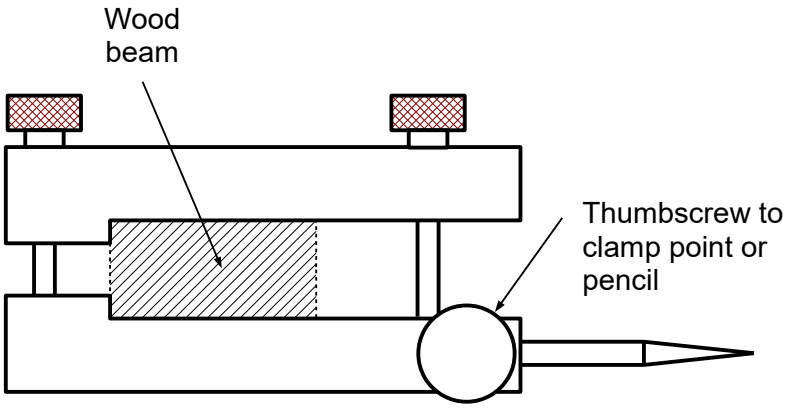

If you want to make pencils and steel points interchangeable, make the hole they fit in 9/32 inch; you'll find that standard pencils will friction-fit into holes of about 0.275", so there's about 6 mils of clearance.

For light-duty trammel work, you can find drafting trammels that would be suitable for light-duty shop use (for example, the Alvin 961 draws arcs with radii up to about 21"). For heavier use, look at trammels from woodworking supply houses; General Tool and Starrett make trammels that are intended to be mounted on a stick. The best is probably the Starrett C251 steel beam trammel. It's well-made, rigid, and works well in a metal shop environment. Taken care of, it will last forever. You can get it with some cast balls and a holder that let you measure and scribe using a hole center (the balls fit into holes up to 1.5" in diameter). If you do metal work, these balls and trammels will get your tail out from underneath the rocking chair someday. And it's not to hard to make a 5/16" extension rod and a splice for scribing larger circles. Another excellent trammel is a Starrett 59, especially if you get it with the optional caliper legs and balls to index on existing holes, but be ready for sticker shock -- still, if you buy it for a lifetime of use, it's not very expensive.

Nivometre n131

In the 1970's, my sister visited France and brought me one of these tape measures made by Stanley in France:

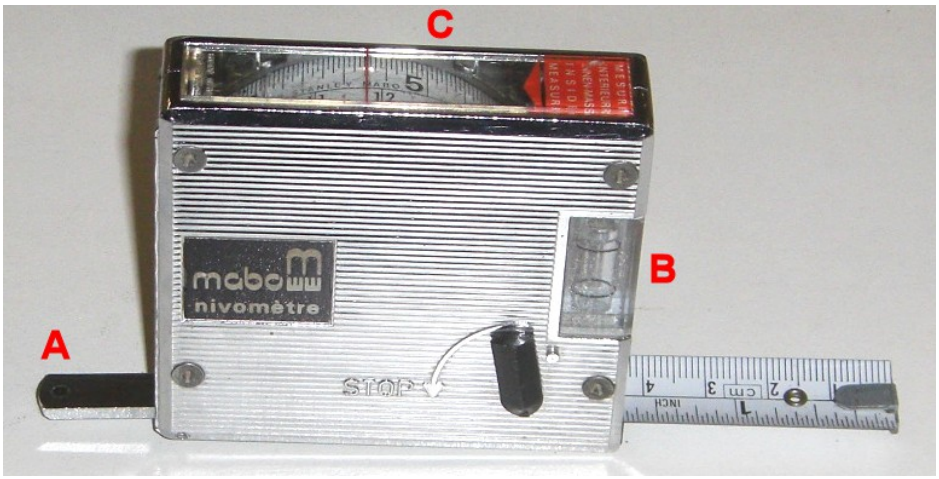

The tape has the following features:

- Body is all right angles, so it can be used as a square.
- The spirit level can indicate level.
- The tape measure provides cm and fractional inches.
- The window lets you read inside measurements directly.
- A hinged point on the bottom pivots out and lets you use the tape measure to lay out arcs. There's a brass rivet near the head of the tape that you insert your pencil point. The radius is read in the window. This feature works well when the tape position is locked with the locking lever.

Overall, it's a well-constructed tool, but I never use it because it's too heavy, doesn't have the tape retraction feature, and is graduated in fractions of an inch (which I hate). However, for inside measurements and laying out arcs, it's direct reading, accurate, and quite convenient.

Marking something for an angle cut

To mark a cut on any shape, immerse the object at the proper angle in a liquid with e.g. some charcoal dust floating on the surface. The dust will leave a mark where you need to cut. This can also be done with a water-soluble dye.

Home-made inclinometer

Popular Mechanics Mar 1921 page 444

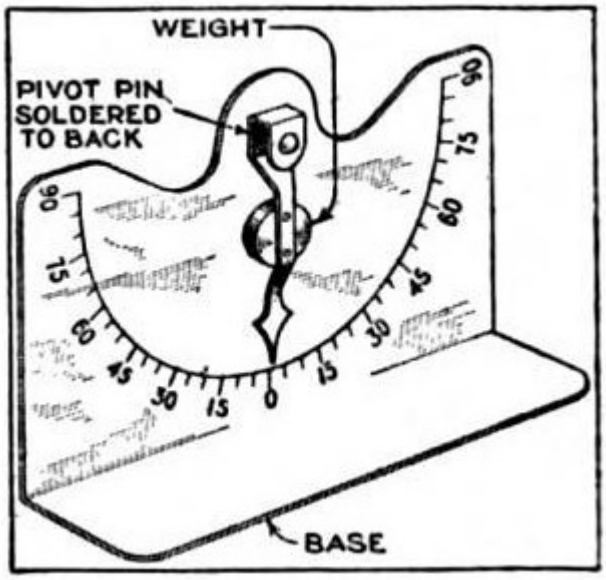

Make from bright sheet metal. Lay out the arc and divisions using dividers. Mark with metal stamps or vibrating engraver. Spray with acrylic to avoid rust.

If the radius of the circle is r, then the divider setting for n degrees is $2r\sin\frac{\theta}{2}$. If d is the divider setting and r is the radius, we also have

$$\left(\frac{d}{r}\right)^2 = 2(1-\cos\theta)$$

Another design

Here's another design for a device to measure small angles just off level. I've used it to measure the sensitivity of levels -- suitably made and used with a sensitive level, it can measure angles on the order of 0.001°.

Get a flat board; drill and tap a 10-32 or 5 mm hole near one end. Hard maple is a good wood for this, as it takes threads well. A chunk of cold-drawn mild steel or aluminum rectangular bar stock would work well too. Insert a reasonably long screw in this tapped hole and you're done. A cap screw with a knurled head could be a good choice. Here's the idea:

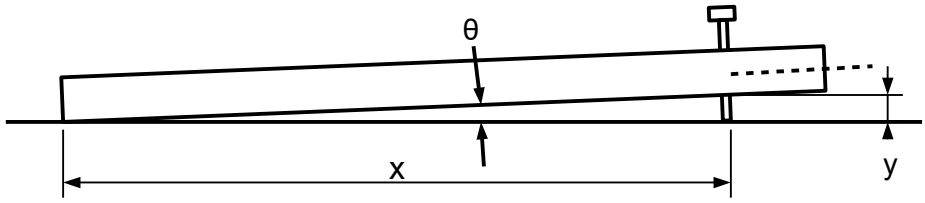

Round off the end of the screw with a file and measure the protrusion distance y from the bottom of the board with your dial calipers or a depth micrometer. Then calculation the tangent of the angle of tilt θ by y/x. For really finicky work, put a spherical end on the screw and calculate the needed small corrections (make a large scale geometry layout and you'll see the cosine-error-type correction needed). A better design is to put a tapered tip on the screw, harden it, then let it bear against a hardened piece of metal.

For more precision work, drill and tap two holes at the left end too and put thumbscrews in them. Use these to help level the plate in two orthogonal directions.

Wood is good because the threaded hole will grab the screw a bit, increasing friction. If you use steel or aluminum, you can use waterproof silicone grease to add a little friction. Another choice is

to put a lock screw in at the dashed line and use a piece of nylon, brass, or solder to press against the height-adjust screw.

I nailed a paint stick on one edge as a guide and used a small finishing nail at the left end to keep the level from falling off:

To use, put the level on the board and establish the distance y_0 that is needed on a known-level surface to get a level reading. Hopefully, it's zero, but if it's negative (i.e., the screw is depressed in the hole, turn the whole thing around or resurface it on a planer. Using the same orientation, measure the unknown slope by adjusting the screw until the level reads level again.

The unknown angle θ can be calculated as

$$\theta = \tan^{-1}\left(\frac{y - y_0}{x}\right)$$

I would aim for making y_0 zero so that the formula is simplest. If you want to be finicky, you'll need to correct x as a function of y (i.e, x won't be quite a constant) and use a spherical end for the screw. I can visualize the issue, but my intuition says it's a small effect that can be ignored.

Used with a sensitive level, you can measure small slope angles easily, in a manner similar to the nice Starrett 133 plumber's level:

This Starrett plumber's level has a sensitive main level bubble (just to the right of center) and it indicates a 0.1° angle with a tilt of one division. You can easily see 1/4th of this movement, meaning you can detect 0.025° changes in angles. A Starrett #98 level 6 inches long has about twice the resolution of this plumber's level.

Triangulation

If you establish some benchmarks around your yard, you can use them to survey your property and accurately locate things on a drawing (or calibrate a satellite picture from e.g. Google maps). I have a Starrett 200 foot fiberglass tape measure that I used to use for this. It lets me locate things to within a couple of inches. When you're doing your surveying, you may need temporary stakes to help you measure around obstructions, especially if you have to make the measurements by yourself. If you do put in temporary stakes, DO NOT remove them until you've finished drawing the layout and you're <u>absolutely sure</u> you won't need them anymore. To be conservative, measure the location of these intermediate stakes from other objects so that you would be able to put them up

again if you need to.

If you have a metal detector, you can bury crossed chunks of steel rebar and locate them later to within about 25 mm or so. My el-cheapo metal detector can locate to this accuracy when the rod is buried about 25 to 50 mm underground. It's a useful way to locate points in the yard. I've used it to locate sprinkler valves in the yard that always have grass grown around them and I can't locate them in the fall when I need to blow out the sprinkler lines.

A few years back my sister gave me a laser tape measure that can measure to within about a mm. It greatly reduces the time to make measurements, but it doesn't work well in daylight -- you need to wait for dusk to measure long distances outside (more expensive models can work well in daylight). Mount it on a tripod and use it to make careful measurements. You should then be able to find almost anything you want later as long as you can locate your benchmarks.

Make your measurements from your benchmarks to the location of interest. While two distances from two separate benchmarks is theoretically adequate to locate something, I feel it's better to have more. This can both reduce the uncertainty and allows for an accident (or other cause) in the future that causes the benchmark to disappear.

Good benchmarks are the corners of cement pads and house cement foundations. You can also drive a chunk of rebar into the ground, but put something permanent to help you locate it if it gets covered with dirt or weeds. Using a tree or vegetation as a benchmark isn't a good idea because it will change as it grows or could be removed. Steel fence posts sunk in concrete can be good benchmarks. If you have a surveying benchmark near you, you can reference your measurements to that.

You may want to take a look at `xyz.zip` at https://someonesdad1.github.io/hobbyutil/project_list.html -- it contains a mini-language that can help you do calculations to reduce the data that you measure. A benefit is that it can calculation the uncertainty in the result if you know the uncertainties of the individual measurements.

If you make or buy a level that you can mount on a tripod, you can also do rough leveling work in your yard. If you want to do careful leveling, you'll want to rent or buy a builder's level or an older transit. I've used a homemade water level with a 3/4" garden hose up to distances of about 100 feet. You may have to consult a surveying textbook to find out how to use such things (there's also quite a bit of information out on the web).

Handy measuring tools

Besides the rule, old-style calipers, dial/electronic/vernier calipers, and a micrometer, some of the most-used measuring tools in my shop are the following.

Pin gauge set

My SPI pin gauge set was being tossed out at a R&D lab I used to work at and I asked my boss if I could have them. He said yes, so I took them home. They are sizes from 0.062 inches to 0.25 inches in steps of 0.001 inches and are quite handy for measuring small hole diameters and slots.

By far my most common use is to gauge hole sizes. Such a gauge set lets you establish the hole size to 1 mil or less, as one gauge will go in and the next size up won't.

Pin gauges are typically sold as either "plus" or "minus" sets. The typical minus set is 0.0002 inches under the nominal size; the plus set is 0.0002 inches over. I would choose a minus set if I could, as it would be most useful for me gauging things, but my plus set still has been very useful, especially since it was free. I did some spot checking of my plus gauge set, using a set of gauge blocks and micrometer for comparisons and the micrometer read dead-on with the gauge blocks; then, when measuring the pin gauges, they were either dead-on or 0.1 mils undersized.

From what I've read, these pin gauge sets are typically made from 52100 steel, the same type of steel used for ball bearing races. This is a tough steel and it contains chrome, so it's a type of stainless steel. This doesn't mean they won't rust (even stainless steel rusts, especially near the

ocean), but they should be pretty robust in a shop environment if you take care of them. Every few years I handle mine after putting a Vaseline/mineral oil mixture on my hands; this leaves a thin protective film over the gauges. They're still in perfect condition.

Taper gauges

These gauges are thin pieces of sheet metal made with precise tapers and graduated:

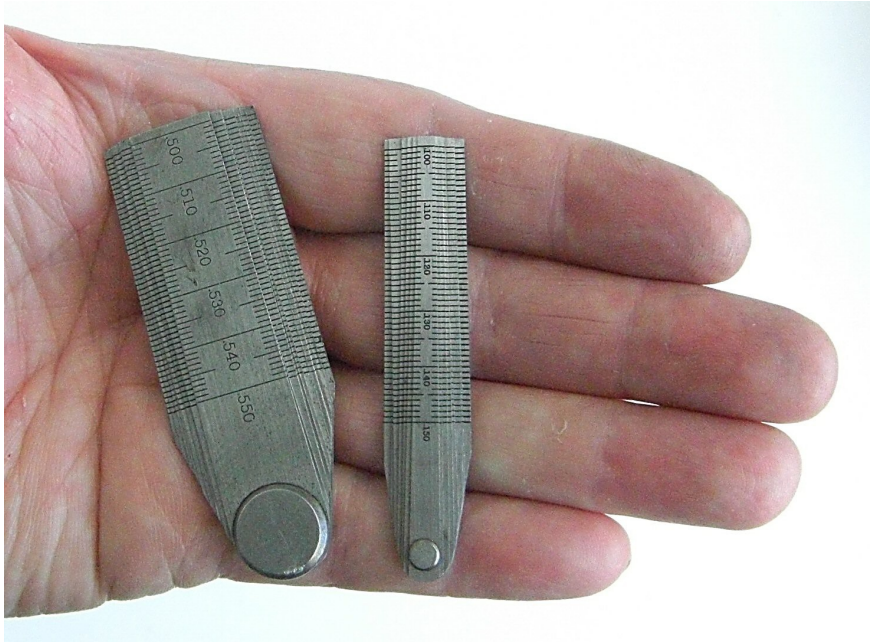

Figure 2

They insert into a hole or slot and you read the hole diameter or slot width where the tapered shape stops at the hole/slot edge. Starrett makes the 269A (8 leaves from 0.1" to 0.5") and 269B (10 leaves from 0.5" to 1") gauges, but these things are expensive -- around $150 each (shown in Figure 2). However, I bought a used set of these two models years ago for about $50 on ebay and I'm continually impressed by how much time they save.

They are compact tools (they easily slip into a small pocket) that can nearly replace two large boxes of pin gauges. Of course, suitable sets of quality pin gauges covering the same range can cost as much or more as two of these gauges.

For a working machinist where time is money, these things will pay for themselves quickly, especially because you can keep them in a pocket or tool apron. For a home shop machinist, they're a luxury, but if you use them for many years, they can also pay for themselves. Starrett makes them in metric too. You can also find much cheaper ($10) taper gauges aimed at people like welders (I bought one of these from Amazon and it works well, but it has a design flaw, as the designers left out the 14 to 15 mm steps).

Besides gauging holes and slots, I use them to set and measure machinist's old-style outside calipers. With a little care, you can measure the caliper setting to nearly 0.001 inches.

They're probably at their most convenient when boring things in the lathe. You can get to a desired hole size quickly. The only disadvantage is that the hole needs to be deep enough to allow the gauge to penetrate sufficiently far to measure.

Thickness gauges

I got the Starrett 467 thickness gauge tool years ago (in fact, I can pin it down to July of 1980 when I started work at a particular company) and it has proven its worth many times over. It has the following inch thickness gauges in mils along with the deviation from nominal size measured with a micrometer:

Thickness, mils	Deviation, 0.1 mils
1.5	-0.5
2	-1
3	-2
4	-0.5
6	-1
8	-2
10	-1
20	-2
30	0
40	-3
75	0
100	0
200	-1.5

Because all the deviations were negative, I suspected the micrometer's zero might be off, but it checked to be correct at zero.

This thickness gauge is a better tool for general shop work than the typical set of automotive feeler gauges because it has a much wider measuring range (it measures most dimensions from 3 mils to 1/2 inch in steps of 0.5 mils). The only thicknesses that can't be made up with this set are 0.497, 0.4985, and 0.499 inches.

Depth gauge

You can of course buy fancy depth gauges, but one I use a lot is a cork with a chunk of 1/16" welding rod through it. It's cheap, fast, and nearly always adequate.

Tools

Wooden handle

Here's a comfortable easy-to-make wooden handle I found on a tool in a second-hand store (Ø means diameter; dimensions are in inches):

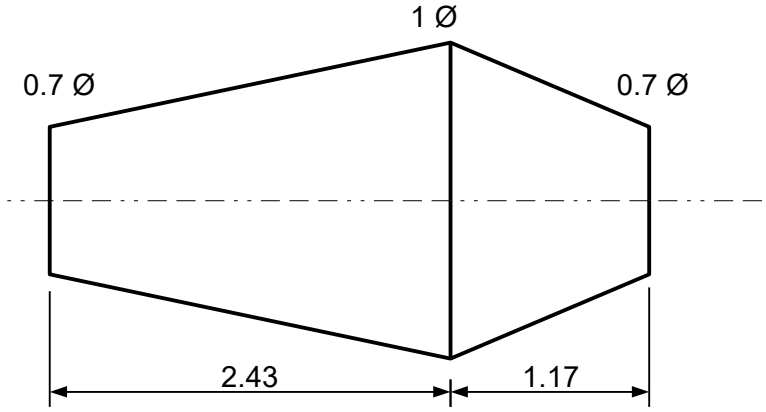

For my hand, I find diameters about 1.4 inches to be more comfortable for turning things. I also like the length to be between 4 and 5 inches.

Cheap tool holder

This is a closed cylindrical container that can store things like thread files. Use cheap PVC pipe and glue a cap on one end. The other end can be capped with a glue cap; it fits well by friction. If you

have a lathe, you can thread a cap instead or make some tapered wood plugs:

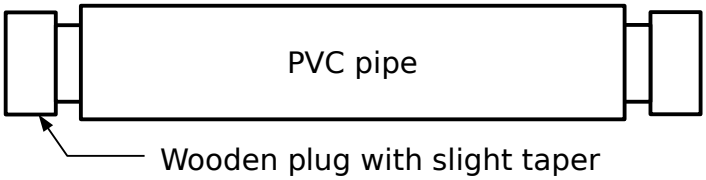

If you want threads, get a schedule 80 PVC nipple and use standard threaded caps.

Hacksaw blade holder

From 1921 Popular Mechanics Shop Notes page 3317:

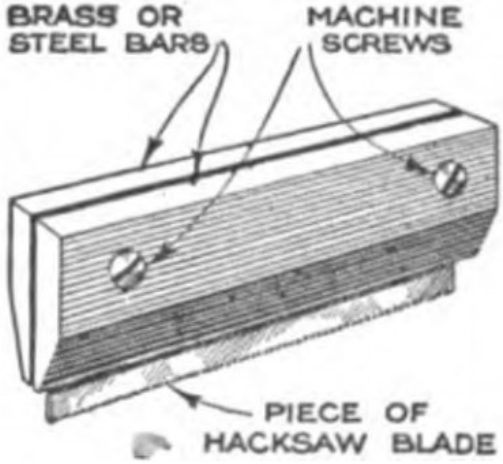

This gives more rigidity to help get a smooth start. Switch to regular hacksaw once the cut is started.

Cotter pin tool

From 1921 Popular Mechanics Shop Notes page 3375:

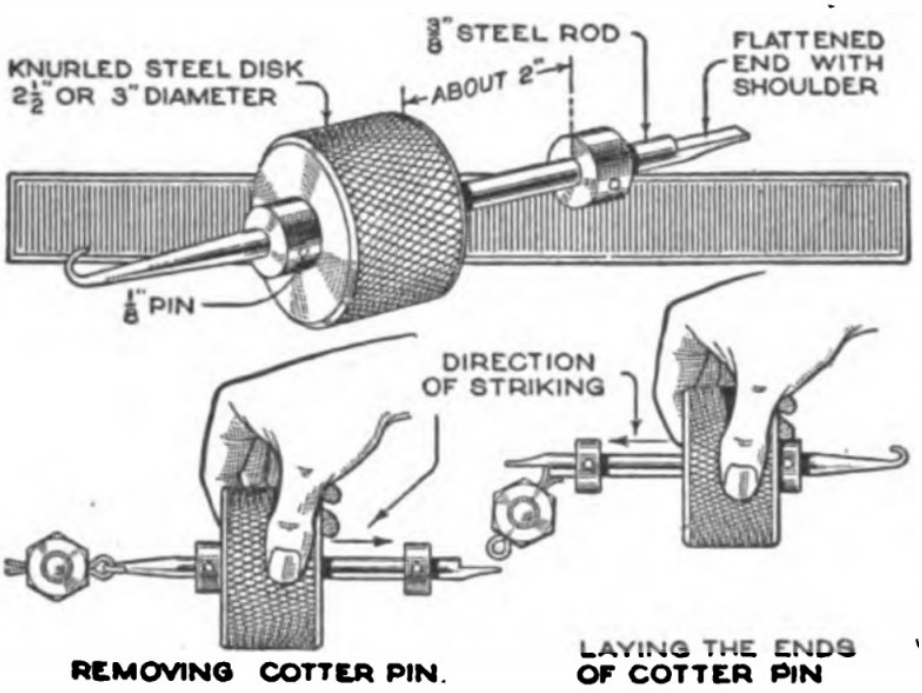

Text: *The tool shown in the drawing will save many minutes, and prevent many cuts and bruises in removing cotter pins from places that are difficult to reach. A steel rod, of the diameter shown, has one end drawn to a taper, and a hook turned on it; the opposite end is filed flat for a short distance, leaving a shoulder for laying the ends of the pins. A knurled steel disk is drilled through the center so as to slide easily over the rod, and two small collars are pinned to the rod about 2 inches apart. The manner of using the tool, which comprises hammer, screwdriver, and puller, is obvious from the illustration.*

I haven't built one of these yet, but when I do, the 3/8" rod will be tool steel and I'll harden and spring temper the hook and shoulder end.

Since I have an inexpensive slide hammer, make it an attachment for this slide hammer.

Bent scriber makes fine adjust

[*sk:143:150*] Make a small bend in a surface gauge's scriber and you can make fine adjustments by turning the scriber:

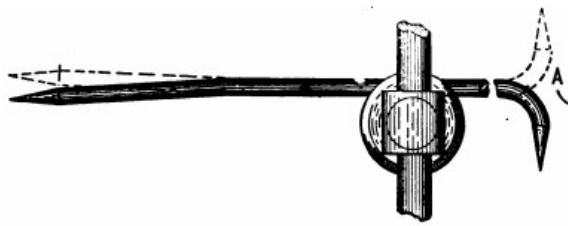

Expansion bit

When you need an oddball-size hole in a chunk of wood, the expansion bit (an old design going back into the 1800's) can be useful, as you can set it to just the diameter you need. They typically can provide hole sizes from about 0.5 to 1.75 inches. Here are two examples; the top one is marked Craftsman (i.e., sold by Sears) and the bottom one is an Irwin 1R:

The Irwin had a tapered square shank that was used with hand braces; I cut this off and filed three flats on the shank so it's easy to chuck in an electric drill's chuck (or the drill press). Run at the slowest speed. After taking this picture, I also filed three flats on the Craftsman one.

Years ago I removed the square chuck on my old brace and installed a Jacobs chuck on it. The brace for this expansion bit might be slightly better than a powered drill, as you have quite a bit of control (of course, it takes more physical work too). Most drills and drill presses don't turn slowly enough for these expansion bits, which were meant to be turned by hand. I have a chuck for my 1/2" square drive impact wrench and I have used it to turn these bits.

The Irwin bit is graduated to give hole diameters from 5/8 to 1 inch with the small insert and 1 to 1-3/4 inches with the large insert. The Craftsman bit is beefier and will give hole diameters from 7/8 to 1-3/4 inches with the small insert and 1-3/4 to 3 inches with the large insert. This Craftsman bit is 50+ years old (I got it from my grandfather after he died in 1970).

When set to larger diameters, you'll probably want to turn these by hand, as they can grab or smoke in the typical drill press that doesn't go slow enough. I've drilled up to nearly 2 inch diameter holes with the Craftsman bit using my 1/2" Milwaukee drill, but I use a handle to offset the torque and use very slow speeds to avoid wrenching my wrists.

Drafting machine

Years ago I bought a used Vemco drafting machine:

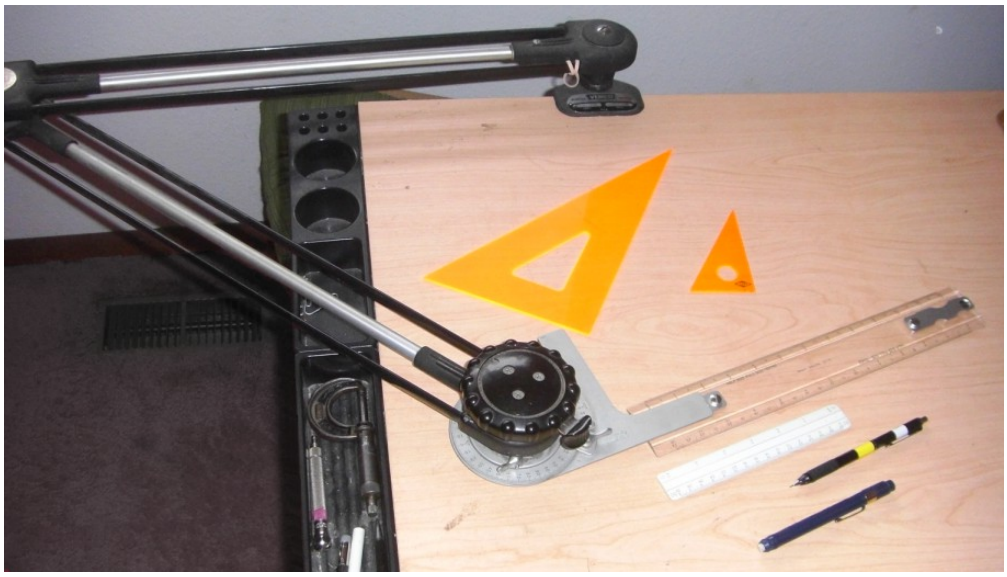

If I recall correctly, it was around $75 delivered from ebay. My wife found a small drafting table at a second-hand store for $20.

This drafting machine is a valuable tool because it lets me construct drawings of things I'm designing or going to make in the shop. The other tools are a 6 inch drafting scale, a mechanical 0.5 mm lead pencil with H drawing leads, a clutch eraser, and two drafting triangles. These simple tools let me do essentially all of the drafting work I need to do (circles are drawn with either a circle template or a compass). Surprisingly, I don't often use the scale on the drafting machine, as I prefer the hand-held one.

> I have an Aristo 867U 150 mm slide rule which is perfect for use around the drafting table. It has inch and mm scales on it, is one-sided, and lets me get quick answers to numerical problems.

I've found that pencil drawings give me a "feel" for a design that I can't get from CAD drawings. There are two reasons for this. First, I can make the drawing to scale and see what it is I'm about to make. Second, drafting with a pencil allows you to explore different designs -- and change the design when you see a problem. In effect, drawing allows you to "build" the design on paper and evaluate different approaches.

Now, a pencil drawing admittedly isn't as convenient as a CAD program when you want to make changes. I rarely make fancy "finished" drawings -- instead, the drafting tools are used to make a layout drawing. This drawing's purpose is to evaluate the design and its dimensions and show the elements with respect to each other. It's carefully made to scale (and labeled and dated) to allow me to pick off the needed fabrication dimensions. I often will make a subsequent quick sketch with dimensions when I'm satisfied with the design to take into the shop to make the part.

You don't need a drafting machine -- a simple tee square and a couple of triangles will do most of what's needed. You can buy these pretty cheaply, but it's also something you can make in the shop

(the tee square doesn't have to be square with the edge as long as you use it in the same orientation on the same edge). You'll want to buy the triangles, as they're accurately made. I've got a number of protractors, but I almost never use them because I lay out angles using tangents instead (if the drafting machine isn't handy).

By the way, 3M makes a translucent tape that uses the same adhesive used on Post-It notes. This tape makes a nearly perfect drafting tape. I fold each corner under so it's easy to peel the tape up when I'm done with a drawing. With care, each strip can be used for a number of drawings, so a single 3/4" wide roll lasts me for many years.

Update: a number of years ago a good friend bought me two Rotring 800 drafting pencils, one in 0.5 mm and the other in 0.7 mm. These make nice drafting pencils. My favorite mechanical pencil is the Pentel Twist-Erase, as the 1 inch long eraser doesn't wear out quickly like all other mechanical pencils. I still use the 2 mm lead holders I used in the 1970's, as these can do a better job of layouts with e.g. 4H to 9H leads.

Punch holder

I've been hitting chisels, punches, and other striking tools for a long time (along with my hand and fingers), but I've never bothered to buy a punch/chisel holder. Such a tool would have certainly been appreciated at times when the hammer missed the punch and banged into my hand or fingers. It struck me the other day (no pun) when I saw a chunk of 1-7/8" diameter steel bar stock that I had some suitable material to make one (I just had to bore it out and tap it):

The threaded rod is 3/8-16 UNC and the hole diameter is 1.08 inches (holds my biggest chisel). The knurled portion is 1 inch in diameter and 4 inches long. The aluminum handle is held to the threaded rod by a 1/8" spring pin.

Starrett 568C vee blocks

In the 1960's I got some Starrett 271C vee blocks, which consisted of two vee blocks and a clamp. A bit later I bought another clamp so that each vee block would have a clamp when desired. I've used these for many shop tasks, but they're a bit on the small side.

Around 1998 or so, I happened to find a pair of Starrett 568C vee blocks on ebay. I still remember that I paid $150 for them delivered; the retail price at the time was $350 (as of May 2019, they're listed on the Starrett website for $514).

When they arrived, I was surprised to find them coated in the stuff that the new tools are coated in -- thus, they were new, but the seller hadn't mentioned this fact. I didn't complain.

These vee blocks are a matched pair -- that means they're ground at the same time in the same setup, which guarantees that they're the same size and the grooves are parallel. They'll hold up to 2 inch diameter round stock and 1.44 inch square stock. Each block is 2.5 inches wide by 3 inches long 2 inches high.

Here's a picture of the two vee blocks with one of the clamps:

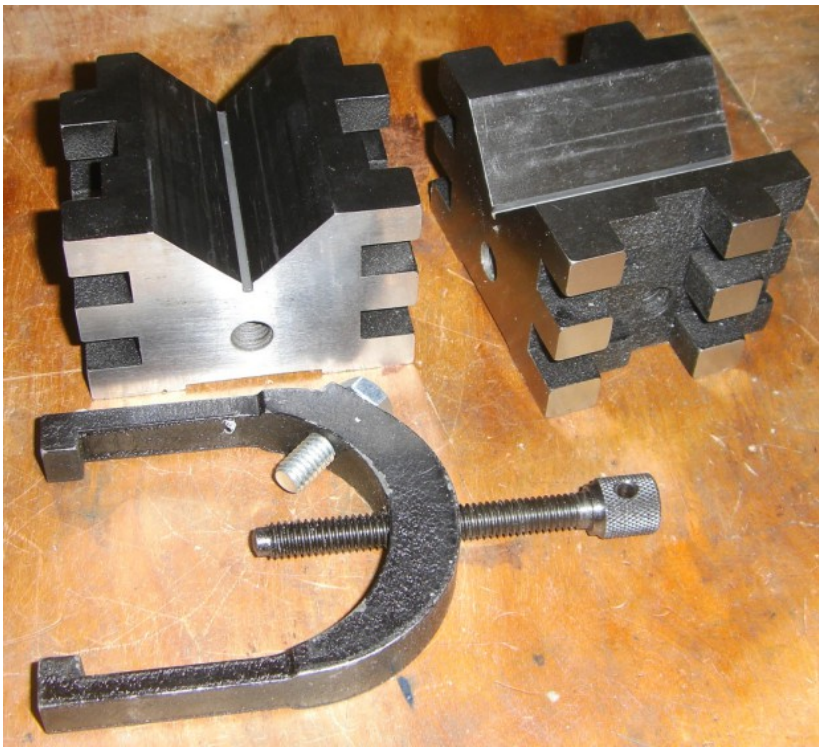

The tooling holes in the blocks and clamps are 3/8-16 UNC. The spare bolt in the clamp keeps dirt from getting in the threaded hole (I've since replaced it with a set screw).

Here's a picture of a typical use, after drilling and countersinking a cross-hole in a chunk of bar stock:

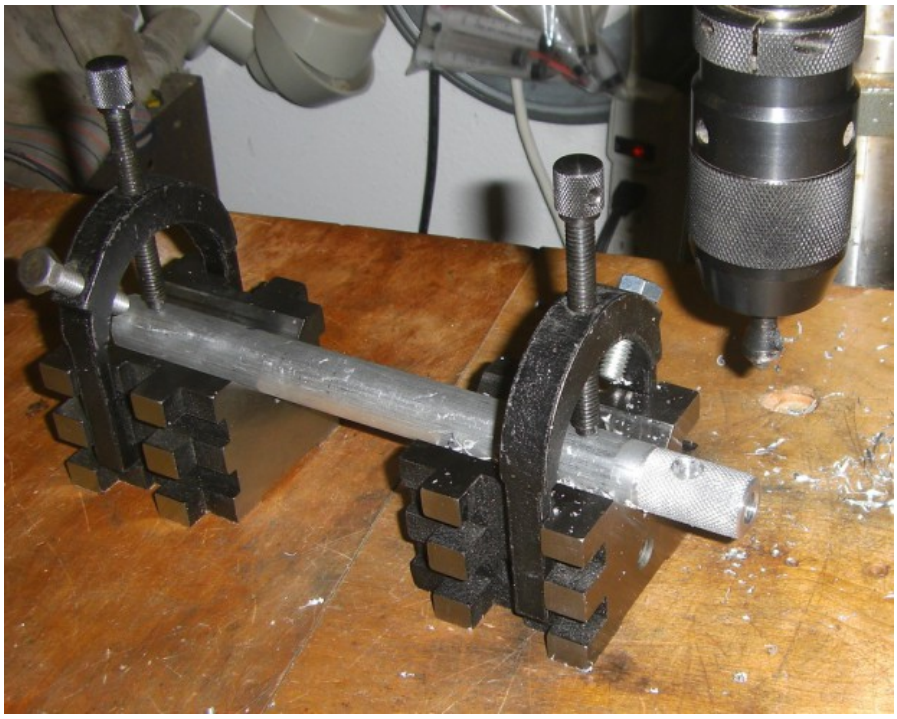

These vee blocks impress me every time I use them. They are superbly made, hardened, and ground to the same size. The clamps hold work in such a way that you can turn the blocks over on their sides and still hold the material, as the clamps don't protrude beyond those fingers that stick out from the side. This is valuable when the clamp would interfere with a short cutter. I almost never use my small vee blocks now that I have these.

Yes, they're quite expensive, but this is a tool you buy once in your life and, if you take care of them, they'll outlast you.

I store my two vee blocks with their clamps by clamping a small chunk of brass. This lets them be a rigid assembly so they can be picked up and put in their storage box.

Nice compass

In the 1970's a draftsman at a company I worked at recommended the Schnellbow compass after I had commented that I often had to draw circles with a size that wasn't on the typical circle template, but were a bit too small to use the drafting trammels. The typical screw-adjust bow compass in a drafting set was annoyingly slow to adjust.

He showed me his Schnellbow compass and it only took a few seconds to realize what a great drafting compass it was:

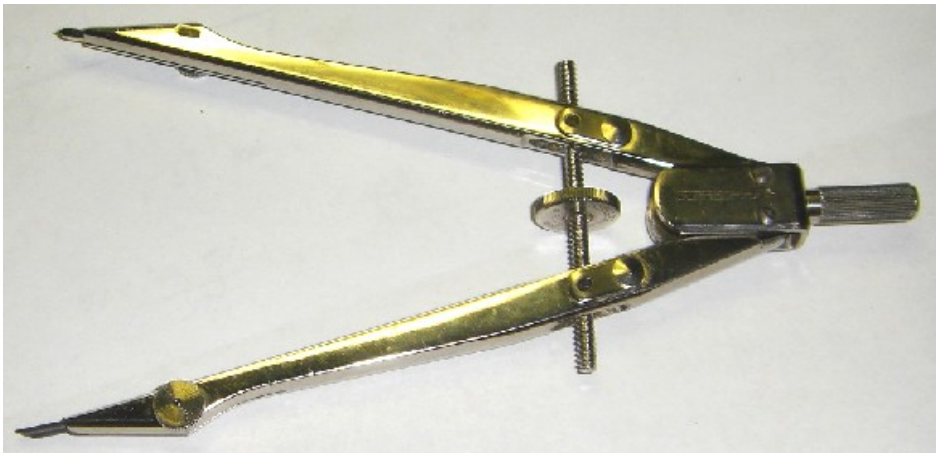

I immediately bought one at a local drafting supply place (this was in Silicon Valley and there were lots of such places back then). It takes 2 mm leads, the same as are used in typical mechanical drafting lead holders. It will draw circles up to 12 inches (300 mm) in diameter and its overall length is about 5.6 inches.

I still use that compass to draw circles and still appreciate it. They don't appear to be made any longer, but you may want to visit a drafting store with a good stock and see if they have something close. Basically, the threaded rod in the bow needs to have a large-lead screw and a low-friction plastic nut. I saw a picture of a compass made by Alvin that looked like it might work in the same way. You can also occasionally find the Schnellbow on auction sites like ebay.

Other screw-adjust drafting compasses work like this Schnellbow -- I have a small Staedtler-Mars drafting set that my wife found at a garage sale for a few dollars and it has the same operation as the Schnellbow; this compass is kept in the shop for drawing circles.

Old man

A number of years ago I was visiting my sister in the Pacific northwest and a good friend of hers who was a machinist took me to a local machinery dealer. This place had a huge warehouse in the back that we were allowed to go browse through. I saw a nice old man back there, so I bought it for $20. The machine shop people had no idea what it was. Here's what it was:

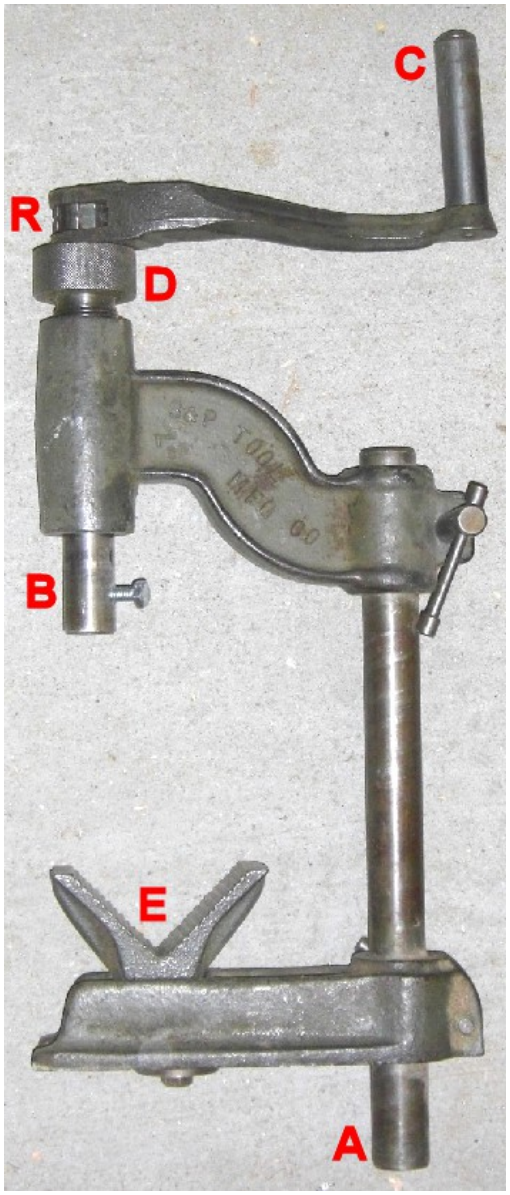

Figure 3

This is a type of tool for hand drilling things whose design goes back well into antiquity (for example, I've seen a topologically-equivalent one in *Modern Machine Shop* by Rose, 1887, chapter 20,

volume 1). If you read old books on machinist stuff from the 1800's and early 1900's, you'll see these things in a variety of forms. They're also called drilling crows.

They were used for drilling holes and were turned by hand. There's a ratchet at R that lets you turn the ratchet handle C in tight spaces. The bar A is 1-1/8 inches in diameter and the pieces are made from cast iron. This particular unit weighs 25 pounds. The secret to these drills was that the threaded portion D caused a great deal of drilling force to be put on the drill bit. The shaft B is 1 inch in diameter and I fixed mine up so it will take a Jacobs chuck or the Albrecht chuck that goes in my mill.

Up until around 2000, they were still made under the name "The Cole Drill", although overpriced. Volume 3 of [*tmbr:18*] discusses them and states that they can do some surprising things:

- Drill a 3/4" diameter hole through mild steel plate without undue effort.
- Using a 3/8" low speed drill motor, holes up to 2 inches in diameter in hardened steel were no problem.
- Cut a 1-1/4" hole through a truck frame with a hole saw.
- Use a masonry bit to drill a hole through a bearing race.
- Drill a 1/2" diameter hole through 2" thick plate glass with a carbon steel drill.

I'll never forget having to drill a 1 inch diameter hole through the bumper of my Land Cruiser back in the 1980's to mount a trailer light socket. I used my 1/2" Milwaukee drill with a 1 inch diameter helical drill and nearly wound up with broken wrists. That's something that I guess everyone should do once to find out why you don't want to do it. It would have been much easier with a hand-driven old man.

One of the advantages to the old man as shown in the picture is that it can be bolted or clamped to a surface. Thus, for example, it can be used to drill out a broken stud in an engine block.

The design of the typical old man was actually somewhat simpler than the picture shown above. Here's a sketch of the idea -- and, except for the ratchet assembly, this could be made in a home shop with hand tools and a drill press. The section *Ratchet drill from pipe threader* below shows how to make a ratchet drill if you have a manual pipe threading ratchet.

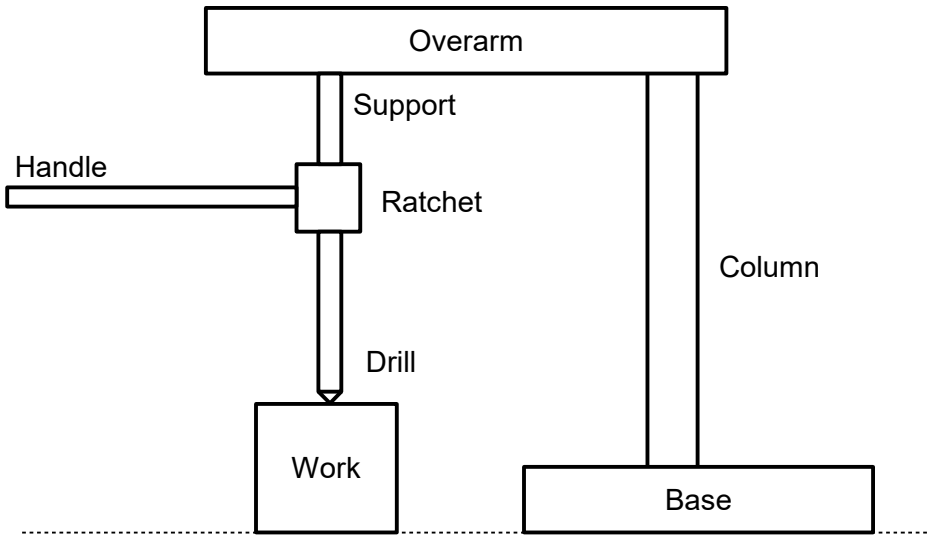

The heart of the device was the ratchet turned by the handle. The support was threaded to allow it to supply thrust to the drill by pushing against the overarm. The base was clamped or screwed to a foundation that wouldn't move and the work was drilled by rotating the ratchet with a drill bit installed. There were designs where the support was automatically turned to feed the drill into the work as you turned the handle.

If I was going to make myself an old man, I'd probably make the base and overarm pieces as follows

to keep the fabrication simple:

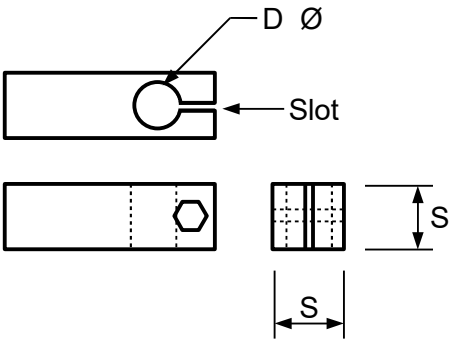

They're the same design, but perhaps different lengths to your taste. The overarm will also have a number of e.g. center-drilled spots on one side to locate the ratchet drill and take the drilling thrust force. If I were to make one, I'd probably use 1.5 inch square steel bar stock and 1" or 1-1/8" diameter bar stock for the column. I'd cut the slot with a hack saw and use a 1/2-13 clamping bolt.

These devices are similar in principle to radial drills, although they don't have the capacity or beefy build that radial drills do.

One might be able to cobble something together with modern components like a ratchet from a socket set or a ratcheting box wrench. More modern designs like the Cole drill also allowed a drill motor to be used to turn the drill. However, after looking at my Ridgid ratchet pipe threading handle, a design occurred to me that would be simple to make if you have a lathe (see *Ratchet drill from pipe threader* below).

Here's a method of hand drilling with a drill press; what's shown is drilling a 1-1/8 inch diameter hole through a piece of 3/4 inch thick aluminum. The drill has a Morse taper shank and a 1/4 inch diameter pointed rod in the chuck aligns the drill with the center hole in the end of the drill. The drill was squared to the work with a combination square and a wrench was used to turn the shank of the drill. Admittedly, this is quite slow (it would go faster with two people)and would take quite a while to drill through, but it does cut:

The reason this would go faster with two people is that one person can maintain the quill pressure while the other person turns the drill. Frankly, I'd much rather use a ratcheting old man than the drill press. I didn't drill all the way through the plate, as it was chattering too much for my tastes (I didn't use any oil) and it was clumsy without another person helping.

There's no way I'd drill that 3/4" hole under power in that cheap Taiwan drill press, as it doesn't have slow enough speeds.

Here's a drilling crow from page 323 in the PDF of [*ilt2b*]:

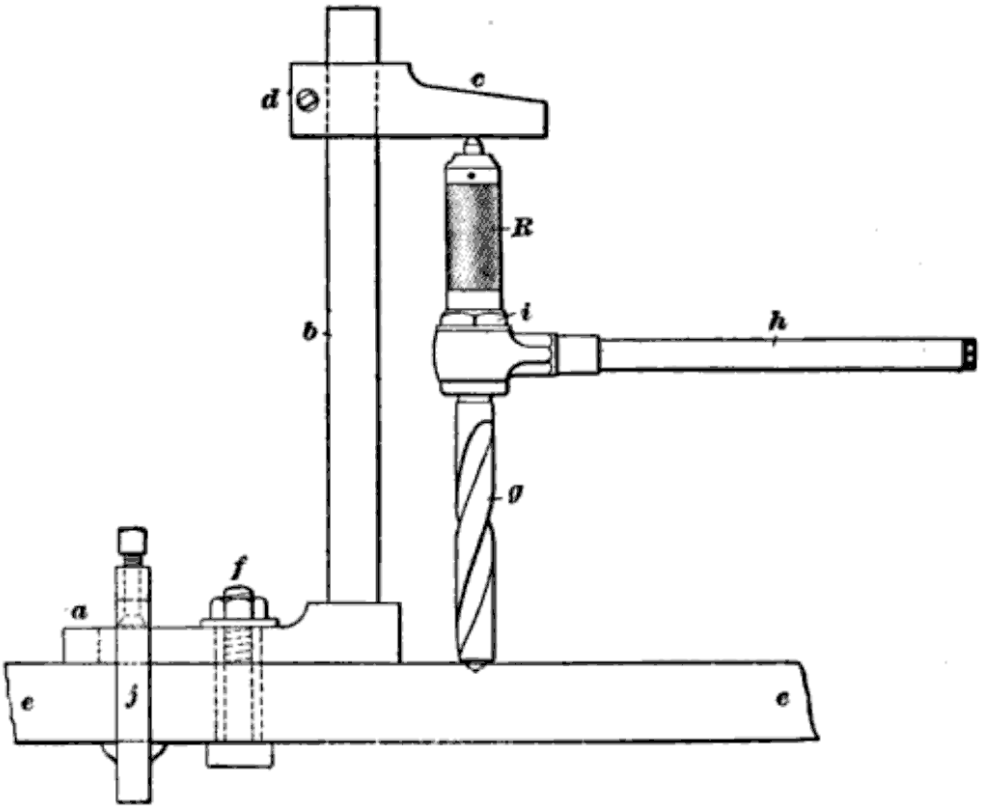

Figure 4

Here's the associated text:

> Ratchet drilling is the slowest method of drilling holes, and should not be resorted to if the work can be done by any of the machine processes, such as the drill press, portable drills, and pneumatic drilling machine; but there are places where none of these can be used or are available and in which cases the ratchet must be used.
>
> Ratchets are generally made single acting; that is, the drill only cuts during the forward stroke of the handle; but some of the improved ratchets are made to give a forward rotary motion to the drill or cutter during both strokes. Ratchets are made to use both square and taper-shank drills.
>
> The taper-shank twist drill is the better tool, but it often happens that odd sizes are needed by men out on repair work, where it is impossible to get the proper size of twist drill, and a square-shank flat drill can be made by any blacksmith or the man himself, or a flat drill already on hand may be made into the required size in a few minutes, either by grinding or dressing.
>
> The ratchet is used for drilling in the following manner: The hole to be drilled is laid out in the usual way and center punched. Means must be provided to force the drill into the material, which is usually done by providing some sort of brace, or, as it is commonly called in the shop, an old man, or a drilling crow, that will serve to support the ratchet and drill to be forced into the work by the feed-screw.
>
> The brace, drilling crow, or old man, is made in a great variety of ways, from a piece of flat iron or steel bent to the proper form to the well-designed adjustable one shown in the figure. This consists of a base a having an upright b carrying an adjustable arm c that is held by the binding screw d.
>
> The base is made fast to the work e by means of a bolt f or clamp f, as shown. The arm c, which has a number of center holes in its lower face, is set to such a height that the ratchet i and drill g will go under it. The drill is set square with the work, or it may be set to lean slightly away from the upright, as the pressure upwards on the arm c will spring the upright b back and so draw the drill about perpendicular. The drill is rotated by means of the handle h and is fed into the work by means of the sleeve R.

The sleeve R is knurled and, when turned, causes the drill to feed. You can also see a hole for a tommy bar in the drawing.

Except perhaps for the ratchet assembly, this drilling crow is something that could be made in a

home shop with hand tools and a drill press, assuming you could get suitable raw materials. I'd recommend that parts a and d be made from rectangular bar stock about 1.25" to 1.5" thick. The bar b should be 1" to 1.25" in diameter. You'd hold the bar to the stock by drilling a close-fitting hole, then using a hacksaw to split the end. A socket head cap screw or bolt would then collapse the split hole to hold the bar.

The disadvantage of the old man in Figure 4 is that you can't attach an electric drill to help with the work. Because of this, you might want to consider an alternative design that uses some of the features of the old man shown in Figure 3 or build the simpler-to-make chain drill in the next section.

A Scotch drill uses a bar bent in the shape of a brace (in the context of brace and bit) to turn the drill. A screw at the end is used for the feed pressure, just like the ratchet drill.

Ratchet drill from pipe threader

I have a Ridgid manual pipe threading tool and these could be turned into a ratcheting drill with some simple lathe work. Here's the head of the tool that includes the ratchet assembly:

It has a 17.5" long handle (made from 3/4" pipe) on it for turning. Here's the removable die:

Here's the 1" die with the 4 screws and top removed, showing the chasers (one is removed from its slot):

It's an elegant mechanical design and beautifully fabricated. The relevant patent 2242594 was issued in 1941 to Ridge Tool Co. (they own the Ridgid brand) and the inventor was Carl Ingwer.

Harbor Freight makes a copy of this design in their #94101 tool for $30 (Nov 2013) which gives you 1/2", 3/4", and 1" sizes (probably a perfect set for the average homeowner). Or, for $70, you can get the #94098 set which gives you the sizes of 3/8" to 2". Here's the 94101 head and one die:

Once you have one of these pipe threading tools and a die, you can make a tool that can hold a drill and, thus, turn this tool into a ratchet drill. Here's what I designed for my Ridgid 1" die:

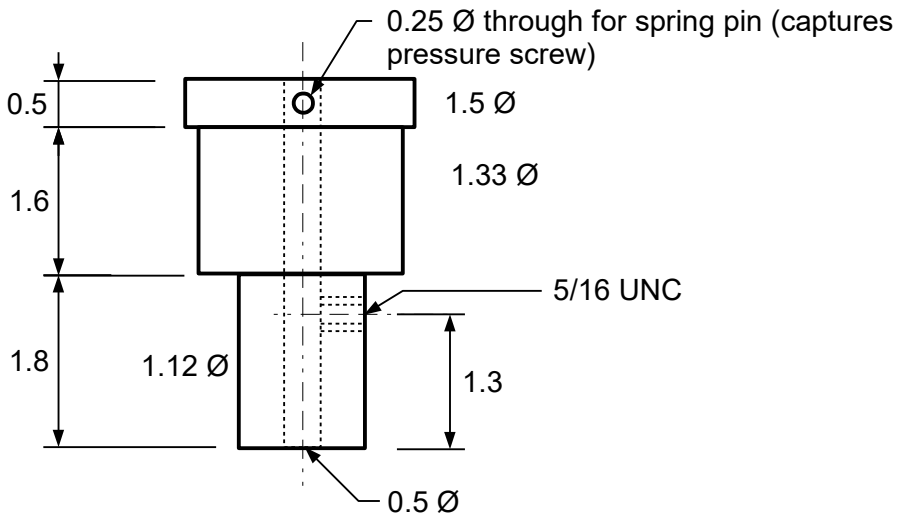

Adapter body

The 5/16 tapped hole is for a bolt which holds the 1/2 inch diameter arbor of my Albrecht chuck. It also captures the adapter in the die so that it can't fall out.

The 1/2" diameter through hole is also used to hold a 1/2" shaft with a fine thread (1/2-20 UNF). This thread is used to provide the drilling pressure. Here's a sketch of these parts:

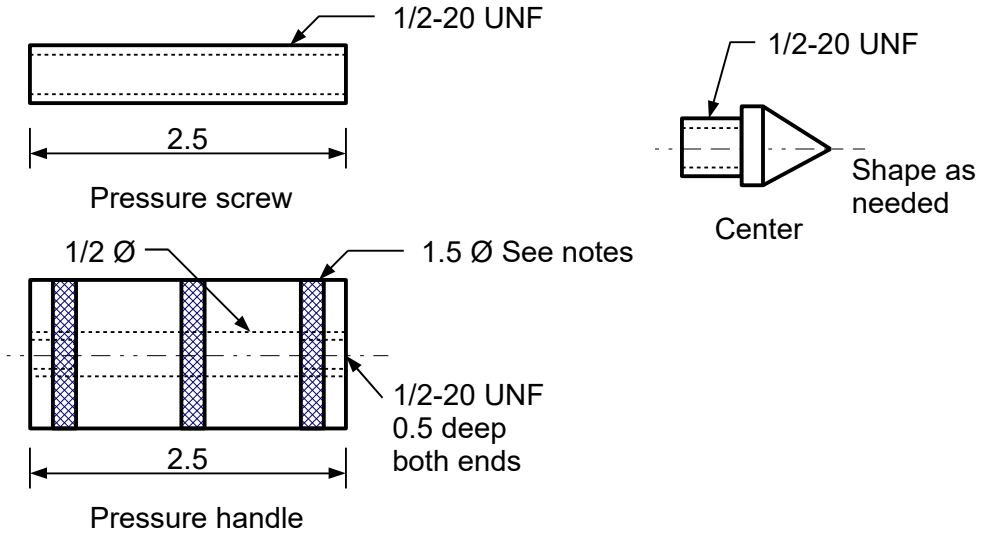

The pressure screw is attached to the adapter body with a 1/4" spring pin. The pressure handle threads onto this screw and the center screws into the other end (you could instead make it be held by a set screw). Then this ratchet drill is used with an old man to manually drill holes.

I've shown the pressure handle with three knurled bands around it. This would help hold a chunk of rubber hose split helically (see *Helical cut in hose*). The hose would be held by a constrictor hitch in some small cord at each end. This rubber handle would be more comfortable to the hand than a knurled surface -- the knurl can rub your hand raw if you use it a lot.

I've not made this ratchet drill, so this is a design that hasn't been tested. But I'm reasonably confident it could be made to work with a bit of fiddling.

A more modern form

When you drill holes roughly 3/8" to 1/2" or larger in metal, you'll find you have to provide lots of

pressure on a hand-held electric drill. It helps to have some extra leverage. If your drill's body can support the load, here's a way to get more leverage (still basically an old man):

The leverage bar applies a drilling force to the drill body. Block A is clamped e.g. to the table you're drilling on.

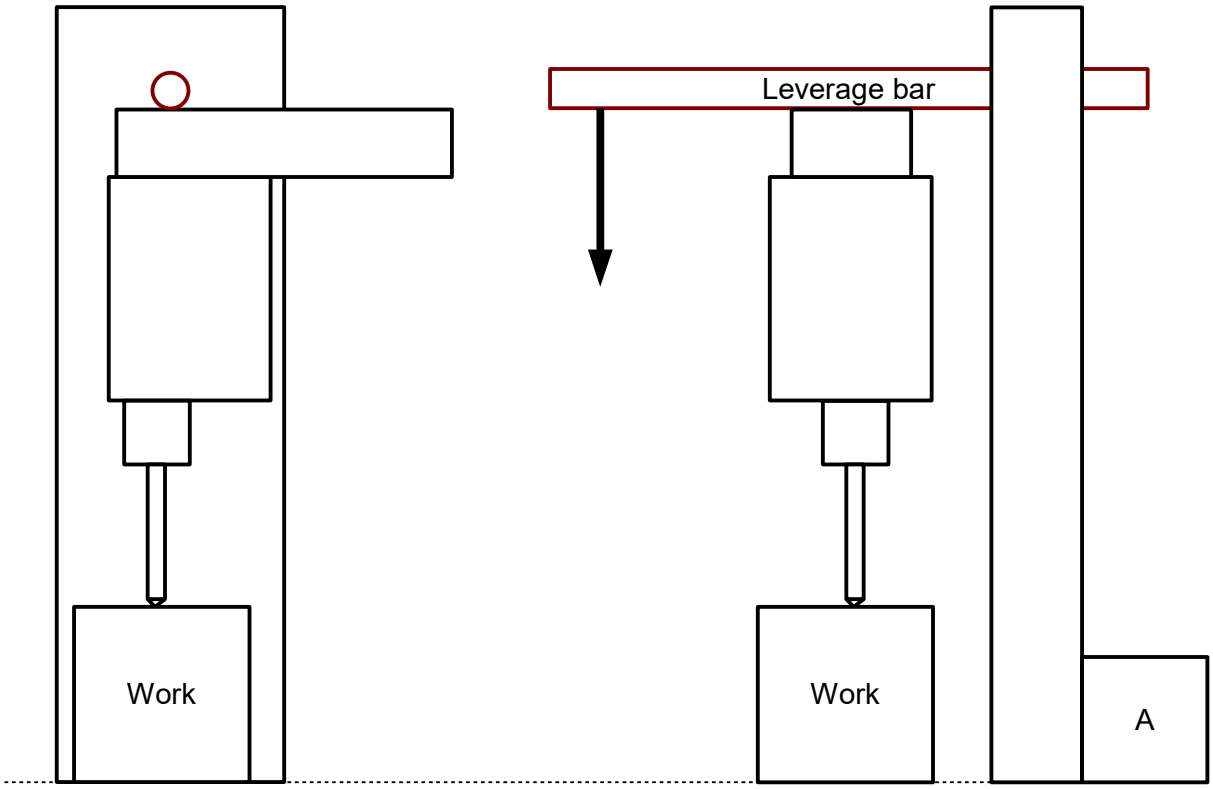

Both my Dewalt 3/8 drill and Milwaukee 1/2" drills have indents in the plastic cases that would be at just the right spot to apply pressure (i.e., the rotation axis intersects these points). However, before I would use an old man like that illustrated, I would first make an adapter that formed some kind of plastic or epoxy adapter over the back of the drill to spread the force around -- otherwise, it looks almost certain to my eye that the case would get cracked.

Chain drill

If you have a lathe, you can make a drilling tool that can clamp around the work and works in a similar fashion to the old man. This idea came from page 289 in the February 1921 issue of *Popular Mechanics*. Here's a picture:

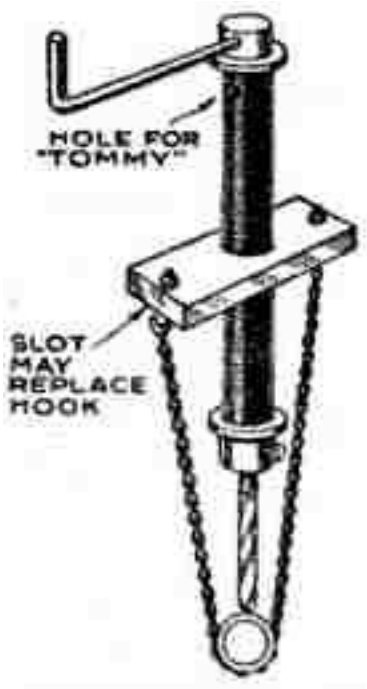

Here's the (slightly edited) text:

> An easily constructed chain drill, of great use in drilling holes in pipe, structural steel, or in any position where the chain may be passed around the object to be drilled, is shown in the drawing.
>
> The tube is formed of a 6 inch length of extra-heavy pipe, threaded full length, on which is mounted the 3/4 inch bar to carry the chain. A washer is placed at each end of the pipe, the rod passed through, and the collars forming the chuck and the handle bosses are pinned in place. A standard drill chuck may be used in place of the improvised one, if desired. Small holes are drilled through the pipe, under the turning crank, to take a "tommy" for use in feeding the drill. The chain plate may be provided with a hook, as shown, to take the loose end of the chain, or the plate may be slotted so that the chain may be slipped in it.

Of course, this wasn't a new idea then, as it goes back at least to 1908 as shown in [*mstm:76*], figures 113 and 114, which calls it a Fifield drilling attachment. It had automatic feed, ball bearings, and was used to drill holes up to 3/4" in diameter.

Small tool cases

A few decades ago I was at my eye doctor's office and I asked the woman who does the contact lens work there if I could have any extra eyeglass cases they had left over. Next time I came back to pick up my contacts, she overwhelmed me with a large paper grocery sack of old cases. I've been using those cases for a variety of things around the shop and home:

- ♦ I store 1/4" hex bits in them.
- ♦ They store small electronic parts for the electrical workbench.
- ♦ I store my Schnellbow compass (see *Nice compass*) in one of these cases.
- ♦ I have some parts associated with dial indicators stored in them.

Oh, they're also useful for storing eyeglasses too. :^)

Internal wrench

Here's an internal wrench design that can be made with a lathe (it's a Ridgid 31405, about $65):

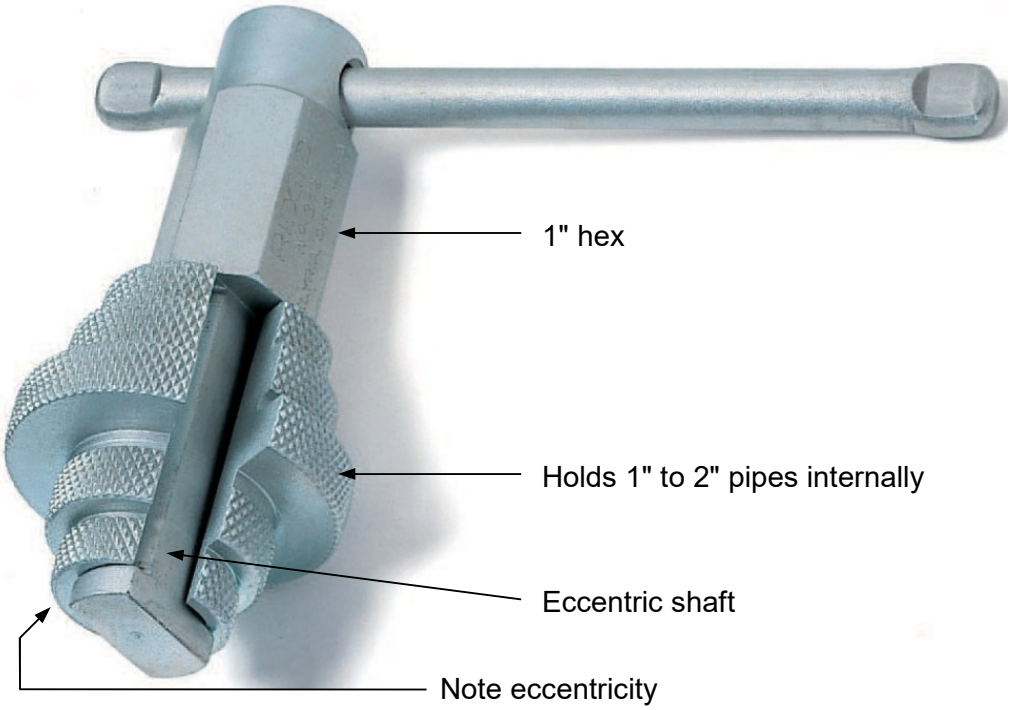

The knurled jaws expand through eccentric action. I don't have one of these units to measure actual dimensions, but I would imagine the body is made from 1" hex mild steel. The knurled portion will be made from high-carbon steel and hardened and tempered. Note the hole through the knurled portion is not concentric with the outside diameters. The 1" hex piece also needs to have an eccentric shaft turned on it to afford the requisite expanding force when the handle is turned. The sides are milled off to allow you to turn the knurled portion around or replace it. It's used on 1" to 2" nipples and for some tub drains (the knurl will ding up soft metals).

You can also find inexpensive internal pipe wrenches, but these typically only fit schedule 40 steel pipe sizes. You may want to make one for schedule 80 PVC pipe in case you ever have to extract e.g. a broken nipple (we use 3/4" PVC threaded nipples for sprinkler mounts). Being able to remove a broken nipple can mean a lot less work during a repair. There are also tools that look a bit like an Easy-out (tapered left hand fast helix to cut into the plastic) to remove broken nipples. But this eccentric knurled design is a bit more useful than the tapered left hand helix design, as it can grab the broken pipe in places the tapered design can't.

File handles

You can buy them or make them. Many years ago I read of someone who just stuck a corncob on the end of a file -- simple and cheap -- and **it's surprisingly effective**. I have three or four files in my tool chest with corn cobs on their ends and a number of ready-to-use dried corncobs for other files. They are much better than using a file with no handle.

My favorite file (a Nicholson 12 inch "Magi-cut" file) has a beautiful handle a woodworking friend with a lathe made me. It's sized from the information on page 107 in volume 3 of [*tmbr*] (the formula came from the Dec. 1989 issue of *Projects in Metal*, pg. 8, in an article by Bob Patrick). Here are the essentials of such handles. First, measure the following two dimensions of your hand in inches:

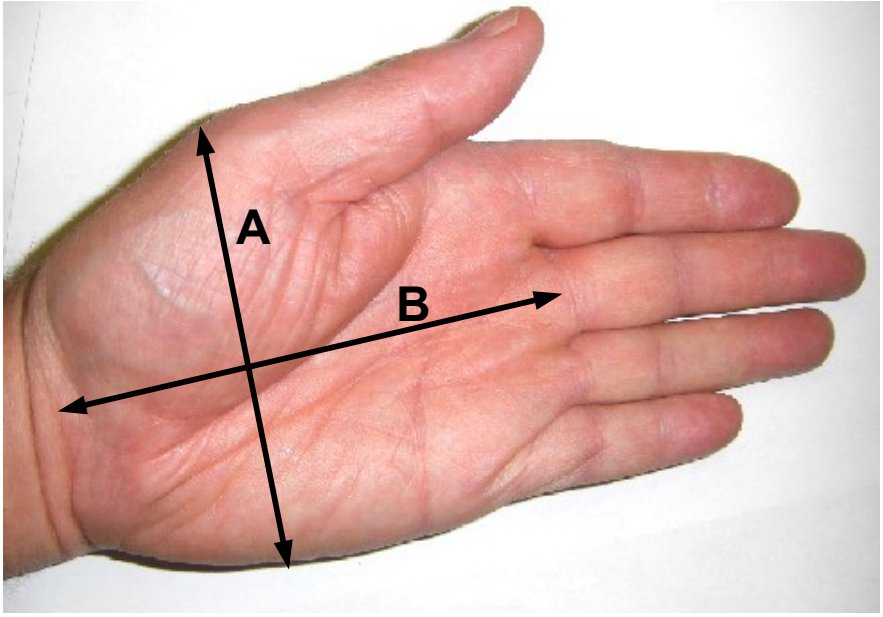

Calculate the following numbers in inches

$$D = \frac{B}{\pi}$$
$$C = A + 1.88$$
$$E = A - 0.87$$

Then make a handle with the following dimensions in inches:

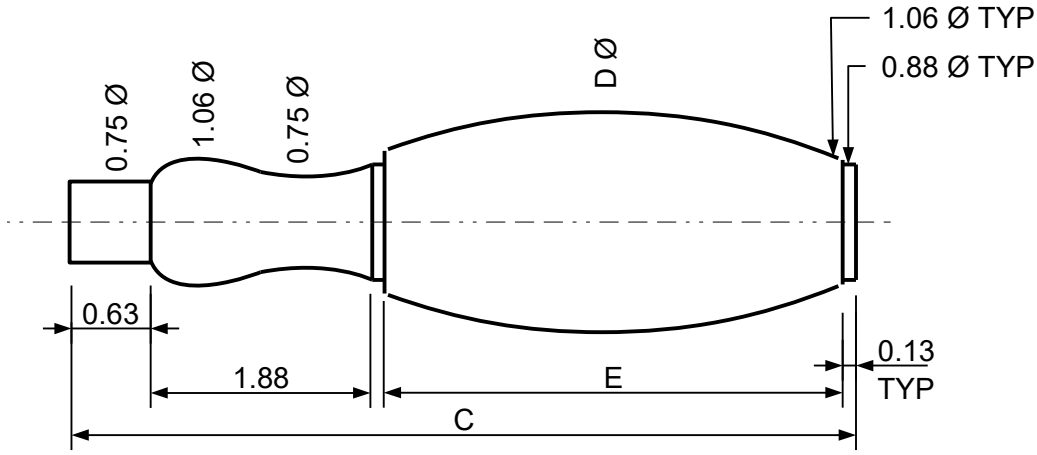

You'll also want to make a ferrule. I made mine from a copper pipe cap; a brass compression fitting nut can also be used. Another option is to wind some wire tightly around the wood.

I have experimented with different tool handle diameters and have found empirically my favorite size for my hand is between 1.3 and 1.4 inches in diameter. Since my hand has a dimension B equal to 4.3 inches (and A was 4.0 inches), the diameter D above calculates to 4.3/π or 1.37 inches. Thus, I've verified the big diameter D of the handle from the formula matches what I feel is the best for me.

Here's an idea from page 286 of the Feb 1921 *Popular Mechanics*:

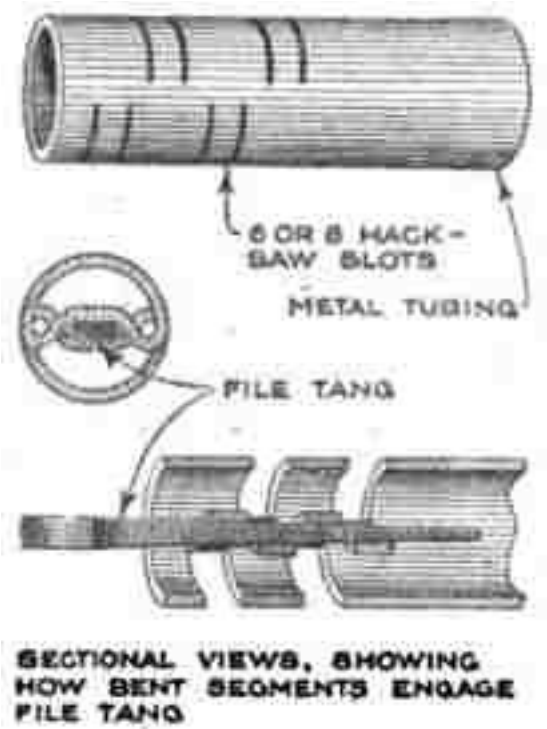

A piece of metal tubing can be cut with a hacksaw as shown and the cut portions bent down with a punch. Insert the file tang and pound the handle onto the file. Avoid getting the pairs of cuts too close together, as it will weaken the handle. I made each pair of cuts about 0.2 inches apart. Use a deburring tool, countersink, or triangular scraper to deburr the tubing ends. A triangular file can deburr the hacksaw cuts. I used a chunk of copper tubing and found that it's really a handle that's better for the bigger files (I used it on a big Nicholson 12 inch "Plater's special").

Carrying sheet material

I came across the following: http://www.gorillagripper.com/ and I was a bit surprised by the price. Not only does it cost $40-$50, it looks ergonomically unsound to me. Instead, I recommend a simple tool you can make in your shop from scrap. I made mine decades ago from the handle of a broken snow shovel and it lets me carry around drywall and plywood sheets:

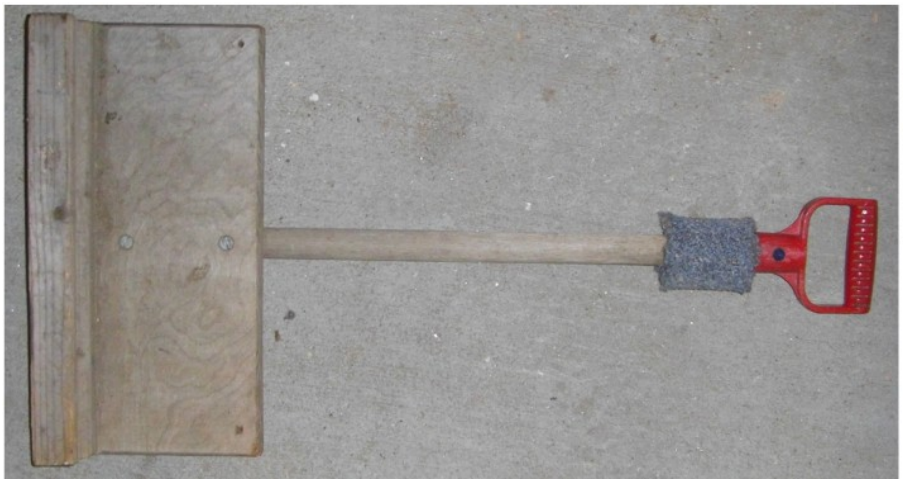

The base is a chunk of 2x4 with an angled slot ripped in it on the table saw; it's screwed to some 3/4 inch plywood. Make the handle-to-base dimension suitable for your arm length and height: you should be able to carry a sheet of plywood an inch or so above the ground with your arm fully extended. You'll be amazed how easy it is to move those cumbersome sheets around without damaging them or yourself.

The thing just under the handle is a few wraps of a strip of carpet from scrap. This keeps your knuckles away from the sheet.

You stand next to the sheet, put this on the opposite side, lift the sheet and position it in the vee, then carry the sheet under your arm. Heavy sheets are hard to lift, so go to the front edge and tilt the sheet up and slide the holder underneath it. Then work it to the center of the sheet. You can easily carry a sheet of plywood or drywall with one hand. Since your arm somewhat grips the sheet, you'll find you can maneuver the sheet using your torso.

For expensive sheet goods, you might want to also cover the plywood and vee with carpet or glue on a strip of rubber from an inner tube.

If you don't have a handy handle, use e.g. a chunk of suitable dowel, two 1x2's, and a chunk of 2x2:

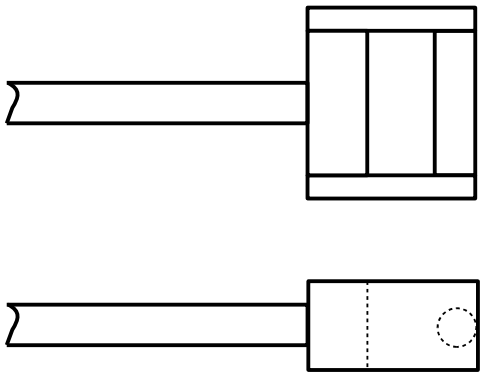

I've occasionally toyed with the idea of putting on an auxiliary leg that's hinged to the long dowel near the handle. Then, if the hinge only opens to e.g. 30-40°, the sheet and the holder should be able to stand on the ground while you do something like open a door. But I haven't done that yet.

I've used this tool for a few decades and it has saved my back numerous times, especially now that I am chronologically-gifted.

Level hack

When no level is available, something suitable can be made from wood:

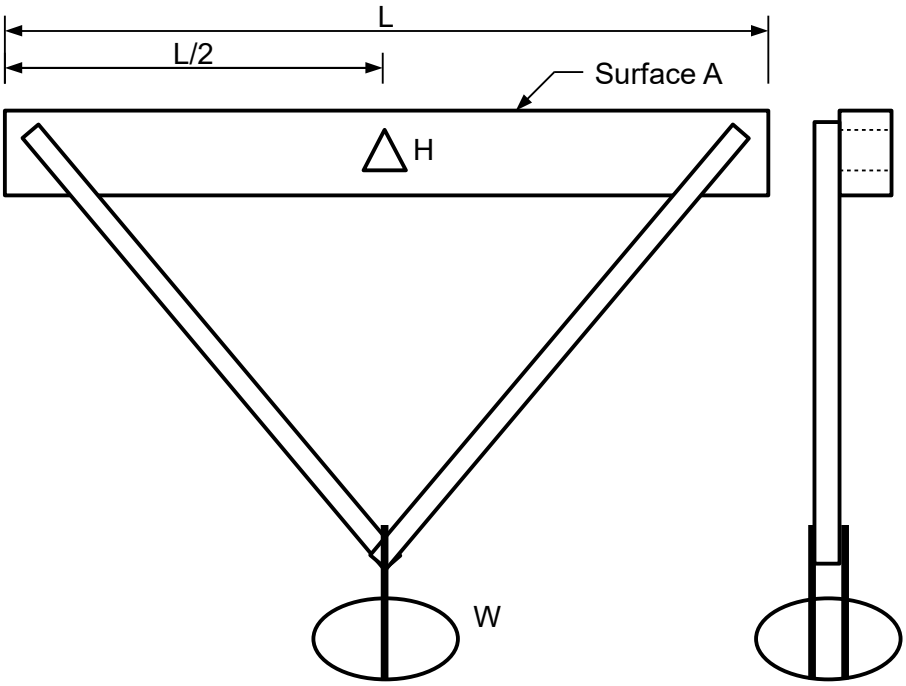

Hang the assembly from a nail using the triangular hole H. Use a weight W to help the level remain steady. Surface A will be level if the tool is constructed properly.

If you have an angle square, check to see if it can be hung from a nail and one surface will be level. My angle square made by Johnson has this useful feature (it needed some fine-tuning with a file to remove some of the molding flash in the hole to do this).

Straightedge

Straightedges are quite useful in the shop, but you can spend a pretty penny on one if you buy e.g. a Starrett 3 or 4 foot one. The Starrett 36 inch long 380-36 straightedge is about $200 in Sep 2015. A decade or two ago I bought a 36 inch long chunk of 1/16" thick by 1" wide O-1 tool steel for some (forgotten) project (I remember it was $9 from a local metal supplier). One time I needed a straightedge and found this chunk worked well for my purposes. Since it's precision ground flat stock, it's quite straight and has parallel edges.

> I checked this chunk of material on my surface plate using a 0.0001" dial indicator. There are repeatability issues with the indicator and the surface plate is only 24" long; nevertheless, I estimate the maximum variation in height is less than 0.0005" (5 "tenths") and probably more like around 2 tenths. This is fine for metalworking applications and far more than sufficient for woodworking tasks. I also compared the 1 inch height of the stock to a gauge block at both ends. It was 5.15 mils over on one end and 5.50 mils over on the other end. The 1/16" nominal thickness matched a gauge block within 0.5 mils.

You can probably find a chunk of such ground stock today for on the order of $30 or so.

Thus, you can buy ground flat stock and get a nice straightedge for substantially less than the real item from a name brand manufacturer. However, realize the material you buy will be in the annealed state and will pick up dings if you're not careful -- the good commercial straightedge should be heat treated, tempered, and then ground and plated.

Commercial straightedges near that length will cost about 2 to 6 times as much (and they may have better specs), but I've found this chunk of O-1 extremely useful in my shop and find I use it all the time, mostly for layout work. It hangs from a magnet on the side of my tool chest. Some day I may get around to putting some graduations on it.

I did a quick search for straight edges at some woodworking places:

- Woodcraft:
  - A Woodpeckers milled aluminum straight edge 36" long for $60; it has a straightness spec of 3 mils along its length. **This is a poor choice**; note the ground stock above is flatter by a factor of 2 or 3 while being a factor of 2 or more lower in cost. You'll also ding the aluminum up over time, even though it's hard-anodized.
  - A 24" rule touted as a straightedge that's (apparently) flat within 2 mils over the blade edge. They also sell a $70 Groz 24" straightedge that's ground and hand scraped; it has a flatness spec of 0.7 mils. The ground flat stock is probably as good or better for less than half the cost.
- Highland Woodworking sells a Veritas 36" straightedge for $90 and it's stated as being milled to within 1 mil over its length. That's a good spec, but they don't say if it's hardened, so if you're interested, you might want to check that out.
- A brand called iGaging that has a 24" straightedge for $47 that's hardened steel.

Oh, one other thing. During the web search, I found a number of aluminum straightedges. These are fine for occasional use by homeowners, but aren't suitable for normal shop work because they won't last. For a robust tool that will last the rest of your life, I'd recommend getting a good one that's ground steel, preferably hardened and tempered.

If you're really picky, buy three of these chunks of ground flat stock and scrape them all flat with respect to each other (the only tool you'll need is a scraper made from an old file). **You'll have straightedges far better than what you can buy**. I've found that the ground flat stock works well

for me; the fact that it isn't hardened hasn't caused me any problems.

Clamp forces

Hoadley's *Understanding Wood*, 2nd ed., 2000, page 196, gives a table of measured clamping forces for various shop clamps. I've reproduced the data here because it's useful and not generally known. Here are the clamp styles (turned sideways to use up less space):

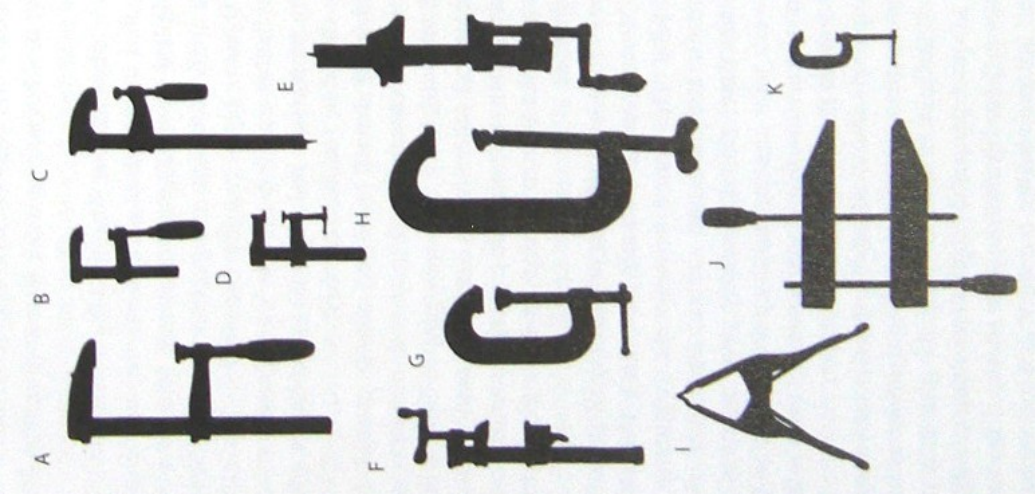

and the tabular data:

	Clamp	Screw diameter, inches	Load, lbf	
A	Lust, 5 inch jaw, straight handle	0.65	550	
B	Hartford, 4 inch jaw, straight handle	0.37	400	
C	Jorgenson, 4 inch jaw, straight handle	0.38	420	
D	Stanley, 6 inch, T-bar handle	0.38	355	*
E	S. H. Co., bar, crank handle	0.63	2060	*
F	Sears, 3/4 pipe, butterfly crank	0.63	1120	*
G	Jorgenson, 4 inch, T-bar handle	0.61	2110	
H	Jorgenson, 8 inch, butterfly handle	0.75	1110	
I	Pony, 8 inch	Spring	25	
J	Craftsman, 10 inch, straight handle	0.44	920	
K	Unknown C-clamp, 2 inch jaw, T-bar	0.31	560	

An asterisk means the clamp started to bend and the test was stopped at this point. The load given is the average of three trials by an "average-sized" man. The spread in the measured values was about 10%.

A conclusion from these data are that heavy steel bar clamps and C-clamps are the preferred tools for heavy clamping forces. My favorite shop clamps are a pair of Brink & Cotton 6-inch C-clamps made from ductile iron castings (they are shape G). I can really honk down on them; so much so that the clamp pad will penetrate significantly into a chunk of Douglas fir. If clamped on the end of a 3/4" chunk of pine, it will crush the board. These C-clamps have a 5/8-6 inch Acme screw thread and the tommy bar style handle (which is what you want when you want to torque them down). I bought these nearly 40 years ago and quailed a bit at the price (I remember they were $20 each), but they have paid for themselves many, many times over.

Identify metric tools

I use a blue marker, blue nail polish, or blue vinyl tape to identify metric tools such as sockets and Allen wrenches. This makes it easier to spot metric tools in a drawer. For metric Allen wrenches, I'll sometimes grind a small ring around it to identify them as metric.

Allen wrenches to make other tools

Allen wrenches are made from a good steel and can be used to make emergency tools, cutters, punches, boring bars, etc. If you have a lathe, you can use one to make a quickie broach to cut a hexagonal hole. They can be hardened with a torch and tempered (I often use them as-hardened without tempering).

Shop-made palette knife

Bend the tip of an old knife to the desired angle and file it to desired shape. You can get cheap cutlery at a second-hand store.

Acrylic goop

You can make some liquid acrylic with acetone and some acrylic plastic (e.g., Plexiglas, Lucite) scraps. Cut the acrylic up into small pieces and dissolve them in the acetone. Use colored acrylic if you want to easily be able to see the goop (or dip a Sharpie marker into a little acetone to get some dye).

One way to get a bunch of small chips is to chuck a chunk of acrylic bar stock in the lathe and face off the end a number of times (or do a similar thing on a milling machine). Catch the chips in a rag across the ways and rub them between your palms; they'll fracture into lots of little small pieces. Then just pour them into the container with the acetone.

I store my goop in a HPDE (high density polyethylene) container that used to hold contact wetting solution. The tip has a small hole that lets you squirt the goop where you want it. I can't tell you the concentration, as I didn't measure things, but rather added a few small handfuls of acrylic chips to about 200 ml of acetone.

I just mix my goop by eye; it's not a saturated solution. The characteristics are such that when I squirt it onto e.g. a metal surface, I need to tilt the surface to get the excess to run off. If I don't let the excess run off, there will be a small bump where the excess liquid dries. This works well for me, as I can just give things a quick squirt and tilt off the excess, brush it around the surface, or wipe it off.

This goop has a few uses in my shop:

- Brush it onto things as an impromptu protectant; for example a galvanized bolt that has been cut off gets the end coated to prevent rust.
- A clear coating for a woodworking project that you're not being particular about.
- A low-tech glue for non-demanding jobs like holding a pin in place or as a rudimentary thread locker.
- I use it on bare cast iron table tops. For example, my bandsaw is near the sink in my shop and can get drops of water splashed on it, which will cause rust. When I squirt on this acrylic goop and spread it around with a paper towel, it dries in 10-20 seconds and I'm left with a surface coating that protects the surface from rust. I cleaned the cast iron off first with some acetone to make sure there were no oils on the surface.

This probably isn't a protectant in the class of the sophisticated commercial offerings. On the other hand, it's cheap and easy to make, so you don't feel guilty about applying it as needed. As the acetone evaporates quickly, you can use the coated item soon after coating.

Make sure the surfaces are clean so the goop adheres better.

If you want to use it as a glue, I'd recommend using a saturated solution.

For more detailed information, consult http://nautarch.tamu.edu/CRL/conservationmanual/File2.htm.

> This website states that Krylon Clear Acrylic 1301 is a formulation of 20 percent Acryloid B-66 (a Rohm & Haas acrylic resin; also known as Paraloid B-66) in non-water miscible toluene that is easily obtained and is excellent for consolidating or sealing off the surfaces of a wide range of material. It is an ethyl methacrylate resin that is harder than Acryloid B-72 and can be used in place of it in most instances. This website also mentions that Acryloid B-66 is often used as a glue by conservators.

Magnetic clamp

I like this idea from Frank Ford:
http://www.frets.com/FretsPages/Luthier/HighTechDept/Magnets/MagPlunger/magplunger.html

It requires a 2 inch diameter neodymium magnet and some 3 inch diameter acrylic tube with greater than a 1/2 inch wall.

Two of these on opposite sides of something could produce some serious clamping forces. Ford's design retracts the magnet 1.5 inches into the acrylic.

Note he fire-polishes the inside of the bored acrylic.

Spindle clamp

Some cheap Chinese drill presses don't come with a quill clamp. It's not hard to add one by tapping a hole in the casting:

Mine was made from a chunk of 1/2" brass hex stock with a 10-32 socket head cap screw for applying turning torque. The round object behind the brass bar is the quill return spring and I remember I had to unscrew it to relax the return tension. I can't remember if I removed the quill or just verified that it was below the level I wanted to drill and tap the hole. If you use steel for the clamp, put a brass or plastic tip on it to avoid dinging the quill.

Pickup stick

Frank Ford had a tip (#147) of gluing a neodymium magnet into a wooden handle for picking up dropped things. I made one by gluing a 1/2" diameter by 3/4" long neodymium magnet into a 1/2"

NPT to 3/4" NPT PVC threaded adapter. I used hot-melt glue to encase the magnet. After the glue was hardened, I removed the remainder of the glue on top of the magnet, exposing the magnet end for maximum lifting power (the magnet's plating had flaked off).

This assembly was threaded into a PVC union with a 3/4" NPT thread on each end. This lets me attach various lengths of 3/4" PVC pipe to make a pickup tool. The easiest is to use a chunk of schedule 80 pipe and thread both ends to make a long nipple. Then threaded unions let me create a longer pickup tool as needed.

I also drilled a 3/16" cross-hole in the PVC union to allow me to attach a cord to the magnet when desired.

Since pipe threads jam, apply a little waterproof silicone grease or Vaseline to them and they'll be easier to take apart when you want to change the handle configuration.

I had a chunk of 3/4" hose that had a helical cut in it (see *Helical cut in hose*), so I put it on as a nice rubber handle and secured it in place with a couple of constrictor hitches in 1/16" braided nylon cord.

Scraper

In the old days, a lot of hand scraping of machine ways was done (this has been replaced by more cost-effective grinding). You'll find that scraping can be an occasionally-useful skill, but where do you find the scrapers? It turns out you already have one in your toolbox -- a plain flat file.

Grind and stone a flat, smooth end on a mill file and it turns it into a scraper (you'll still be able to use it as a file):

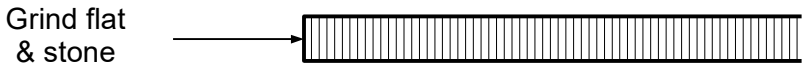

Hold the file around 45° to a surface and move back and forth, pressing down on the file with the hand that's not holding the handle. Vary the angle to change the way the tools scrapes. Practice on some scrap and you'll be able to do some scraping when the time comes.

I've used this technique to remove dings in my lathe's flame-hardened bed. They are easily removed without damaging anything further.

Frank Ford's tip #24 at http://www.frets.com/HomeShopTech/ShopTips/tiplist.html is similar, but he uses about a 45° grind to provide a sharper cutter.

Another method is to braze a handle to a carbide insert; you can also buy commercial tools made in a similar fashion. There are also heavy-duty paint scrapers which might be useful.

Handy ratchet

Here's a ratchet made by Proto that I have come to like:

It's a standard 3/8" ratchet with an added feature. At A is a switch that determines whether the handle rotates freely around the ratchet body or not. This switch can lock the handle with respect to the ratchet body in multiple positions, but that's not a feature I find useful. It's the free-wheeling feature that's useful -- this lets you "pump" the ratchet handle to quickly remove and install nuts and bolts. The only requirement is that the nut or bolt turn freely (i.e., have little friction), as you don't

have much leverage. For final tightening, switch to the locked position and use it as a normal ratchet. I bought this ratchet a few decades ago from a used tool store, but a number of vendors now make such things.

Update Dec 2018: I've had a cordless Dewalt DCF887 brushless 1/4" hex impact wrench for a while and almost never use ratchets anymore because of the speed and utility of the impact wrench. I use it constantly for drilling, driving screws, and working with nuts and bolts. It will apply up to 120 ft-lb of torque, which is adequate for most jobs. I also got a DCF899B 1/2 inch brushless impact wrench. I'll never use my air impact stuff anymore, as these cordless tools are just so convenient.

Hand clamp

Make one of these:

Straightforward to make from a chunk of aluminum bar stock and a retaining ring or e-clip.

Morse taper protectors

PVC pipes cut with a hand saw can make protectors for #3 Morse tapers:

The lower gray schedule 80 plastic pipe covers my keyless chuck's taper shank and has a

constrictor hitch in braided nylon twine holding the split end closed (it was cut with a hacksaw). These are simple hacks, but they've been protecting the taper shanks of my lathe tools for decades. Note the PVC threaded to glue adapter (3/4" size) protecting the point of the live center -- you only jam your hand against that sharp point once and you decide you need some kind of protection for when it's not being used. It's similar to learning to take those sharp lathe bits out of the tool holder when working on getting things into the chuck.

I probably heated the white plastic pipe with a hair drier after making the saw cuts to bend things in a little (I made these decades ago, so I've forgotten exactly what I did). It has just the right amount of friction to hold it on the shank. The price is certainly right.

Block & tackle

These give a triple purchase. Make wide enough to use with carabiners and 3/8" rope.

http://bbs.homeshopmachinist.net/threads/39202-Shop-Made-Tools/page15?p=513773#post513773

If suitable ball bearings can be found, use them. However, some brass bushings and grease will work fine. For occasional use, no bearing is needed -- just have the aluminum ride on the bolt directly.

Mild steel = structural steel = min yield strength = 35 kpsi. Shear strength is taken to be about 0.6 of the tensile yield strength, so use 20 kpsi as a shear strength design. Thus, the shear strength is 2e4 times the cross-sectional area in square inches. Here's some shear strengths of different size bolts:

Screw	Area, in^2	Strength, lb
1/4-20	0.0318	636
1/4-28	0.0364	728
5/16-18	0.0524	1048
5/16-24	0.0580	1160
3/8-16	0.0775	1550
3/8-20	0.0878	1756
Shear yield strength, kpsi		20

Assume the 3/8" double-braided Dacron rope I use has a breaking strength of around 5 thousand pounds-force. Then a safe maximum working load would be roughly one third or less (there will be no dynamic loads and this won't be life/property threatening use, so I'm using a safety factor of 3). Thus, to support a 1.7 klbf load, use the 3/8-20 screw. If you want a larger factor of safety, say 5, use 5/16-18 and limit the load to 1 klbf.

I'll use a 5/16" bolt; here's why. I can apply roughly a maximum of 125 lbs pull to a rope (depends on the direction, of course). If I have another person help pull, we can apply about 250 lbs to a rope. Then since this pulley setup has a mechanical advantage of 4, that means we'll be applying a load of 1000 lbf in the pull. Thus, the screw has to withstand a shear load of 1000 lb. The 5/16" bolts can take this. And this will be a rare load, as I'll usually be using the tackle by myself.

I would make two pulleys of style A and I would make the smaller pulley a bit larger (say, 3/4 the size of the large pulley). Also make sure there's enough clearance to use a carabiner to clip to things when there's rope over the pulleys.

A further design feature would be to use button-head cap screws in a fine thread. Then use a thin jamb nut on the other side. Make the nut secure with either a small piece of nylon in the threads or just use Loctite. This keeps the protrusion to a minimum. For even less protrusion, use a brass rod and peen it over into a shallow countersink. Use axle grease to lube the pulleys before assembling.

Here's a way to have a design with no protrusions:

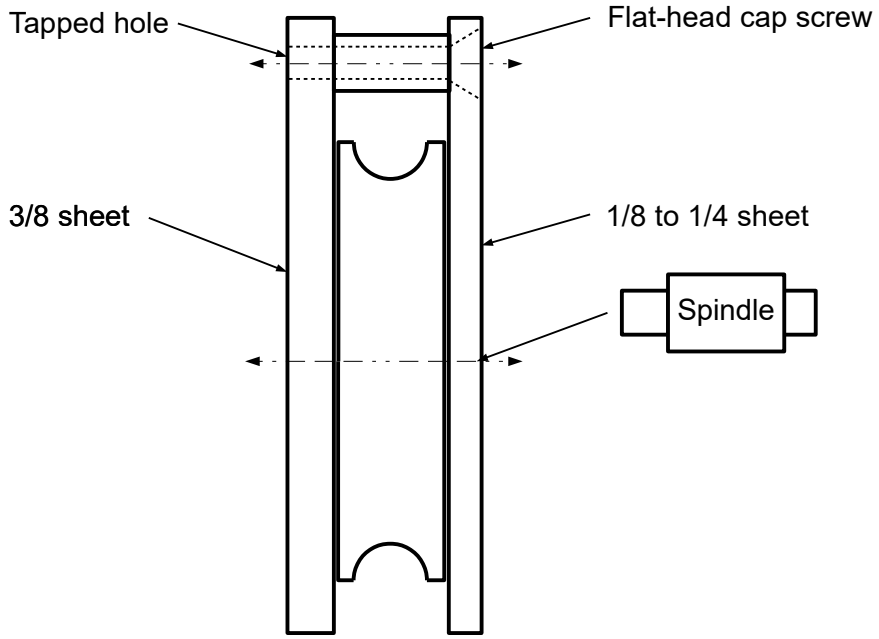

I'd make the pulleys about 10 mils narrower than the spacers so that there's about 5 mils of clearance on each side.

To avoid using Loctite, take some nylon fishing line and wrap it around the threads. Then use a torch to melt it into the threads. It will jam the bolt when tightened.

Wrench torques

I measured the torques I could apply with various wrenches I have:

No.	Wrench	Torque, ft-lbf	ELA, inches	Force, lbf	Model
1	Challenger open end	25	5	60	5418
2	SO short box	25	4.9	61	XS1618A
3	SO short combination	25	4.9	61	OEX180
4	SO long combination	45	6.9	78	OEX18
5	SO deep offset box	55	8.1	81	XO1618
6	SO Saltus	45	6.7	81	FH1618C
7	SO standard ratchet	45	6.5	83	F710
8	SO long flex ratchet	65	10.1	77	F711A

SO = Snap-On
ELA = effective lever arm

The measurement method was to clamp a Utica TCI-150FRD click-type 1/2" square drive torque wrench in a vise with a 9/16" socket, then use a 9/16" wrench to turn a 3/8-16 bolt with a nut on it to apply a torque to the torque wrench. The torque wrench was set in 5 ft-lbf increments until I couldn't get a click from it with a particular wrench. I applied as much force as I would do in normally working on things (actually, I would consider it the maximum force I could apply to that wrench with just my unaided hand).

The Force column is the torque number divided by the ELA (estimated lever arm) converted to feet; it shows how consistent I was in applying a force to each wrench. I'm not sure why the first three are lower than the wrenches 4-8, but wrench #2 is my all-time favorite wrench to use. I'm also unsure why the forces for the ratchet handles 7 and 8 are not higher than the wrenches, as I find those ratchet handles more comfortable than any wrench.

This particular experiment was part of a larger experiment evaluating the design of a shop tool in a piece of plywood. I applied torques to the 3/8" bolt and washer up to 110 ft-lbf (anything above 65 ft-lbs was applied with the Utica 1/2" torque wrench). Above torques of roughly around 60 ft-lbf, the standard cheap mild steel washers would badly deform and gall because the wood fibers would crush, so hardened and tempered (e.g., class 8) washers should be used for torques above 60-70 ft-lbf.

I estimate the uncertainty in the torque wrench's values could be up to around 20% (i.e., the wrench is uncalibrated and I didn't feel like fiddling around to calibrate it, so the measurements are primarily comparative).

Update August 2015: I made a calibration tool for my torque wrenches and found the Utica torque wrench read about 17% low at around 50 ft-lb torque.

Shop chemicals/materials

Cold cyanoacrylate glue

Keep your cyanoacrylate in the freezer in a zip lock plastic bag. It should keep for years.

Glue syringe

It's useful to keep a small amount of woodworking glue in a syringe for pin-point application when you need it. To help keep things from drying out, here's a simple technique: store the needle tip under water (grind the sharp tip off):

The bottle was some old cosmetics bottle from one of the females in the family. It is glued into the hole cut into the plywood base with some hot-melt glue to make it a little more stable.

This method guarantees that the needle tip won't get dried glue plugging it up. Sure, you could probably find a piece of piano wire to stick in there to clear it out, but why not head the problem off at the pass?

This is not suitable for long-term (say, 6 months or longer) because the water will eventually dilute the glue, but it will work fine for a month or two.

Where to get syringes

I got a long-term supply of syringes and needles when I had to give our sick horse some injections. Where I live, the local farmer's supply store sells syringes and needles, so you can just buy what you need. One time I had to take the horse to a vet for some teeth grinding and he had a big bucket of used needles in his truck. He told me to take all I wanted. These are typically 14 gauge needles and are quite useful around the shop. **Grind the sharp tips off so you don't poke yourself**.

You may live where it's not easy to get syringes and needles. You can search the web and there are mail order places that sell syringes and blunt needles. You can also ask your doctor for a prescription for them and then buy them at the local pharmacy. If you know a worker at a local emergency room, you can ask them to save syringes for you (but they won't save the needles). Check with a local agricultural store to see if they'll sell you syringes.

I find the most-useful syringe sizes in my shop are the 5 and 10 cc sizes (often 6 or 11 cc). 14 and 18 gauge needles are the most useful around the shop (again, grind the sharp tips off).

Other syringe uses

Use syringes and blunt needles to put liquids (even pretty viscous liquids like greases) where you want them. I use Vaseline in syringes in the shop and around the house most often. To work well, I mix 10%-20% mineral oil by volume with the Vaseline (makes it easier to squirt in colder weather) and melt both in a double boiler (just use hot water from the tap). Pour it into the syringe, push the plunger in, invert so the nozzle is pointing up, and push the plunger in to remove all the air. Put on a needle and cap it. A 10 cc syringe full of this Vaseline-oil mix will last me quite a while. You'll find

many uses for this handy tool.

Other substances can be put in the syringe. For example, we used some colored caulking in a bathroom re-flooring project and I squirted some caulk from the caulking gun into a syringe. I ground off the needle tip and filled the needle cover with water, then put the needle cover in place. This lets the assembly be used later without the caulk drying out. I used the same syringe and needle for floor base molding adhesive and it was useful for getting in the open spots around corners where we didn't get quite enough adhesive.

Tapping goop

I mixed the following materials in a double boiler (just use hot tap water; no need to boil it):

Mass, g	Material
2.0	Powdered graphite
5.8	Mixture of lard and 20% by volume of mineral oil
4.8	Mineral oil
2.5	Paraffin wax

and poured the resulting mix into a 12 cc syringe. With a hypodermic needle with the tip ground off, this makes a tapping lubricant you can squirt it into the hole you're about to tap (or squirt it onto the tap's threads). The mineral oil weighed 5 g, but I estimate that 0.2 g stayed behind sticking to the container.

Where did the recipe come from? I made it up by guess and by golly. I've used that mixture of lard and mineral oil for a long time, but it gets too stiff in the winter and it's a heavy syrup in the summer. I decided I'd dilute it a bit more with mineral oil so it should work better in a syringe. I added the wax with the intention that it might stay behind in the hole, providing a bit of lubrication and/or corrosion protection (wax isn't a terribly good lubricant though).

The quantities looked good to my eye when I put them into the little mixing cups and weighed them. There's no science to the mixture -- just a guess that it will be as good or better than the lard + mineral oil.

My first test was hand tapping a 3/8-16 UNC hole in some 3/8" aluminum. It turned so easily (I was using a taper tap) that I thought I must have drilled an oversize hole. I had to force myself to remember to break the chip because the tap handle turned so easily. It works better than the lard/mineral oil mixture, probably because of the addition of the graphite. It is a black, messy goop, but that's irrelevant if it eases tapping and avoids a broken tap. To make a comparison, I immediately tapped another hole next to the first using the old lard/mineral oil mixture and the same tap. I concluded the new concoction is a little bit better. However, it's not a huge improvement -- but it's still enough that it will be my tapping goop of choice, especially for small taps in tough materials.

I also tapped some 3/8-16 holes through some 0.9 inch thick steel plate with a taper tap and the experience was similar to that of the aluminum -- things tap easily enough that you don't really need to break the chip, but I did so anyway about every 2 turns. I always start taps in the drill press by starting the spindle, turning it off, waiting for it to slow down, then plunging the spindle in the work's hole. It's simple and fast to get a tap started straight. Before starting the spindle, I squirt a small bead of this goop along two lands of the tap (for a 4-land tap).

I recommend you buy a 1 pound box of powdered graphite for your shop; it will last a long time. I use it on the worm gear of the blade elevation adjustment of my table saw; regular grease gets fouled quickly with sawdust. Similarly, buy a pound of lard, a package of paraffin wax, and a liter of mineral oil. These will also typically last a long time. Then you'll have these materials on-hand (they're useful by themselves) and can mix up a syringe-full when you need it. Break off a chunk of the wax and keep it in your tool apron for when you're driving screws; wipe the screw's threads on the wax and they'll drive into the wood a bit easier. I also keep a chunk of wax handy when hacksawing metal; drag the hacksaw blade through the wax (it will melt after you've been sawing a while) and you'll find the sawing will go more smoothly.

Of course, the use of graphite is not a new idea -- I've seen it in books from the 1800's. One book recommended two parts tallow (beef fat) and one part graphite for hacksawing. As tallow probably isn't as available as lard (unless you want to render fat yourself), I'd substitute lard for this. However, when hacksawing, I use either a chunk of paraffin wax or some WD-40 because they're at-hand and convenient. Any lubrication is better when hacksawing than cutting dry, even water.

Here's a picture of a tapping job. I squirted some goop onto the tap's lands, then used the drill press to align the tap in the hole:

I never tap under power, as it's an easy way to break a tap unless the work is thin sheet metal.

Reusing containers & storing shop chemicals

You can clean out and reuse various household containers in your shop. Ones from the kitchen that contained food are probably polyethylene (PE) or polypropylene (PP). The easiest way to identify the container's material is to look for the recycle symbol on the bottom (see *Identifying plastics*). If you can't read the symbol, you'll have to guess or run an experiment to see if it's suitable for what you want it to hold.

Here's a list of some chemicals found around the home and shop and recommended plastics to hold them. These ratings are for room temperature (20 °C).

Chemical	Store in	S
Acetic acid, 10%	PVC, PTFE, UHMW	1
Acetone	HDPE, Nylon, PP, PTFE	1
Alcohol, isopropyl	HDPE, PET, PP, PTFE, UHMW	1
Ammonia, 25%	LDPE, HDPE, PP, PVC, PTFE	2
Bleach (sodium hypochlorite), 15%	Acrylic, HDPE, PET, PC, PP, PVC, PTFE, UHMW	1
Diesel oil	Acrylic, Nylon, PET, PTFE, UHMW	1
Edible oils	Nylon, PET, PTFE, UHMW	1
Ethylene glycol (antifreeze), 96%	Acrylic, HDPE, PP, PVC, PTFE, UHMW	1
Gasoline	HDPE, Nylon, PET, PTFE, UHMW	1
Hydrochloric acid, 0.5	Acrylic, HDPE, PET, PC, PP, PVC, PTFE, UHMW	1
Hydrogen peroxide, 1%	PET, PC, PTFE, UHMW	1
Hydrogenated vegetable oils	Nylon, PET, PTFE, UHMW	1
Kerosene	Acrylic, PC, PVC, PTFE	2
Lacquer thinner	PTFE	2
Linseed oil	Nylon, PC, PVC, UHMW	1
Lubricating oils (petroleum)	Nylon, PET, PVC, PTFE, UHMW	1
Methyl chloride[14]	PTFE, UHMW	1
Methyl ethyl ketone	Nylon, PET, PTFE, UHMW	1
Mineral spirits[15]	Nylon, PTFE, UHMW	1

14 I'm assuming this is the same as methylene chloride, commonly used as a welding solvent for acrylic.
15 Also called paint thinner, white spirits, mineral turpentine, turpentine substitute, petroleum spirits, solvent

Chemical	Store in	S
Nitric acid, 10%	PVC, PTFE, UHMW	1
Oil, mineral	Nylon, PVC, PTFE, UHMW	1
Soap solutions	HDPE, Nylon, PET, PP, PVC, PTFE, UHMW	1
Sodium bicarbonate, aq., 50%	Acrylic, HDPE, Nylon, PET, PC, PVC, PTFE, UHMW	1
Sodium hydroxide, 10%	LDPE, HDPE, PP, PET, PVC, PTFE	2
Sodium hydroxide, concentrated	HDPE, PP, PVC, PTFE	2
Sulfuric acid, 5%	PET, PVC, PTFE, UHMW	1
Tar	PTFE	1
Toluene	Nylon, PET, PTFE	1
Trisodium phosphate, 95%	Acrylic, HDPE, PET, PP, PVC, PTFE	1
Turpentine	Nylon, PVC, PTFE, UHMW	1
Vaseline (petroleum jelly)	HDPE, Nylon, PET, PC, PVC, PTFE, UHMW	1
Vegetable oils	Nylon, PET, PTFE, UHMW	1
Vinegar	ABS, HDPE, PET, PP, PVC, PTFE, UHMW	1
Xylene	PET, PTFE	1

The sources (S column) are:

1. http://www.plasticsintl.com/plastics_chemical_resistence_chart.html To be included in the table above, the plastic needed to have an "A" rating in the referenced web page.
2. Nalgene Chemical Compatibility Guide (no document number or date given). To be included in the present table, the Nalgene rating must have been E or G.

The plastics are:

ABS	Acrylonitrile butadiene styrene
Acrylic	Polymethylmethacrylate
HDPE	High-density polyethylene
Nylon	Nylon 6/6
PC	Polycarbonate
PET	Polyethylene terephthalate
PP	Polypropylene
PTFE	Polytetrafluoroethylene (Teflon)
PVC	Polyvinyl chloride (rigid, not flexible)
UHMW	Ultrahigh molecular weight polyethylene

Many of the above chemicals (especially the solvents) come in metal cans and those are my preferred method of storage. You can go to your local paint store and buy empty metal cans as you need them.

If you're interested, the only solvents I use on a regular basis in my shop are acetone and mineral spirits, with lacquer thinner occasionally on that list. I have a number of others, but they are only used in special situations. I keep the acetone in the "I Can't Believe It's Butter" spray containers, as they are polyethylene and will stand up to the solvent (the one on my work bench has been in use since before 1996 for storing acetone, so I know they stand up to it). This lets me spray it just where I need it (I usually give a couple of sprays to a paper towel to wipe something off). A gallon of acetone lasts me a long time.

One mixture of stuff I've found <u>not</u> suitable for HDPE containers is a 50:50 mix of automatic transmission fluid and acetone. This is a favorite penetrant, but since it has damaged the containers I've tried to store it in, I've switched to ATF and kerosene (kerosene and mineral oil are the components of Liquid Wrench penetrant).

Glass is suitable for most of the indicated materials, but since my shop has concrete floors, I don't allow glass containers in it. If I had no choice, I would probably make or buy some kind of foam protector for the glass container such that it would be protected against a drop onto the concrete.

---

naphtha (petroleum) or Stoddard solvent.

Here's a lesson from experience: don't store strong acids or bases in your shop. Since hydrochloric acid is useful for cleaning and it's cheap, I kept a gallon under my bench. However, over the years, the cap obviously didn't seal well (or it leached through the container), leading to rusting of many of the steel things under my bench, one of which was an expensive Elu plunge router. I then moved the container of acid outside and set it on my concrete pad. That was a poor decision too, as it dissolved the top of the concrete over a few years. It now lives in an outbuilding on a dirt floor in a plastic crate. In truth, I've rarely used it, so I probably shouldn't have purchased it in the first place.

Mineral oil

Get a quart or liter of mineral oil from the drugstore. It's meant for human consumption, so it's reasonably pure. It's a fair general-purpose lubricant around the shop. If you want, you can pay a lot more per unit volume by e.g. buying Starrett's oil, but Starrett's container has a little red cap that's going to get lost some day -- then, when it gets tipped over in your tool chest, you'll get oil on everything (guess how I know).

A better container is an old contact solution container with a screw top. The nozzle pops out, you fill the bottle, put the nozzle back in, and you're off and running. Label the container with a Sharpie and put some clear packing tape over it. Look for a supplier of plastic containers in your area -- we have one and though they are primarily wholesale, they have a retail counter and an area where you can browse their stock. You will find lots of interesting containers you didn't know existed. For shop chemicals (especially solvents), I tend to lean towards polyethylene or polypropylene. Ask the females in your life to save you the bottles their chemicals and cosmetics come in; you'll find many useful types.

My wife uses a Clairol hair coloring kit that comes with a nice HDPE squeeze bottle that's perfect to hold cutting oil.

Storing volatile materials

One of the things that has always annoyed me is that cans with screw lids like contact cement comes in always seem to dry out or go bad over time. The question is why -- is there a chemical reaction that causes the chemical to degrade or is it simply the volatile solvents evaporating over time because the cap doesn't seal well enough?

The trigger of this question came from opening a small can of contact cement because I wanted to glue some leather to some wood. The can was purchased a little over 2 years ago and I had added lacquer thinner to it once. This time, it was a big stretchy lump of rubber and I couldn't pull the brush out of the can. This is annoying, as that little can was ridiculously expensive for a few ounces of cement and I had used maybe 5% of the contents. I put in about 15-20% of the can's volume of lacquer thinner and let it set for a few days, but there's still a lump of rubber in it. I was able to get the brush free and it sorta works as a contact cement, but I can see the writing on the wall -- I'm going to have to buy a new can.

If the material is degrading, there's not much that can be done unless you know the degradation process and can interfere with it somehow. But if it's evaporation (and I think it is), then our task is to figure out how to slow the evaporation rate.

The easiest solution that comes to mind is to store the can in another container. The slow leak of volatile solvents will establish a solvent vapor pressure in the outer container and the evaporation will reach equilibrium in short order. The only loss will be through the leakage of the second container. If I had something like a Nalgene polyethylene bottle that could contain the first container, I suspect my problems would come to an end. But I don't have a suitable bottle.

So we improvise. I have numerous containers that come from the kitchen (Mayonnaise, instant coffee, etc.) and these are quite useful in the shop for holding fasteners (and they don't break when you drop them, unlike the old baby food jars). So we'll cut up some inner tube rubber to make a gasket for one of these containers and see how that works. The only suitable container I had was a PETE one that used to contain instant coffee.

I'll revisit this after a month or two to see if the container stands up to the lacquer thinner vapors.

Update 2 months later: the PET jar the cement was stored in hasn't been damaged, but the lacquer thinner I added appears to have substantially evaporated. I topped off the can of contact cement with lacquer thinner. I also cleaned the can's threads and sealing area and coated them with Vaseline, hoping to reduce the evaporation rate. The rubber cement needs to be replaced, as it's a gummy mess.

Identifying plastics

Here's a little Wile E. Coyote moment I had the other day: I wanted to make an acrylic solution to brush onto some metal to protect it from rust. The easiest way of getting this (short of driving to the store and buying some) was to cut up some scrap chunks of Plexiglas[16] and dissolve them in acetone. I grabbed a little portion cup from the shop bench (I keep a stack of these available for mixing things; they're saved from things like Jello and drink mixes) and set up the mixture, wrote down the time, covered the container with a scrap piece of acrylic to reduce evaporation, and left the shop. The next morning, I came into the shop and saw the scrap piece of acrylic sitting flat on the wooden drill press table (it was black acrylic) and I wondered who moved the experiment (I was girding my loins to fuss at them). Picking up the black plastic, I saw that the little cup I put it in had been dissolved by the acetone and I had a sticky mess on my drill press table (thankfully, it cleaned up quickly with a chisel). The coyote and anvil met with a satisfying clang, as I knew from previous experiments that these little cups won't hold up to acetone (I had forgotten that they are polystyrene).

The same day, I happened to read Frank Ford's set of tips and his tip #185 addresses this issue directly. I like Frank's tips to identify the plastic: if it's cheap and it cracks when you bend it, it's probably polystyrene, such as the plastic drawers in the inexpensive parts boxes. If it contained food and bends well, it's probably polyethylene or polypropylene.

Here are the typical recycle symbols you'll see (densities taken from wikipedia pages; see if the item floats on water to help identify it):

Symbol	Plastic (density, g/cm^3)	Typical uses
	PET, PETE polyethylene terephthalate (1.38)	Soft drink bottles, water and salad dressing, peanut butter, etc. Not suitable for hot drinks. Note Mylar is a type of PET.
	HDPE high density polyethylene (0.93-0.97)	Water pipes, milk, juice, and water bottles, grocery bags, shampoo/toiletry, etc.
	PVC polyvinyl chloride (1.3-1.45)	Not used for packaging foods. Pipes, wire insulation, furniture, clothes, toys, etc.
	LDPE low density polyethylene (0.91-0.94)	Frozen food bags, squeezable bottles (honey, mustard), cling films, flexible container lids, etc.
	PP polypropylene (0.85)	Reusable microwave ware, kitchenware, yogurt containers, microwave disposable take-away containers, disposable plates/cups, etc.
	PS polystyrene (0.96-1.04)	Egg cartons, packing peanuts, disposable cups, plates, trays, and cutlery, disposable food containers, etc.
	Other; often PC (polycarbonate, 1.2-1.22) or ABS (1.04)	Beverage bottles, baby milk bottles, compact disks, "unbreakable" glazing, lenses in glasses, etc.

16 Many people misspell it as "Plexiglass". It's a trade name of Rohm & Haas.

The yellow symbols are the ones that are safe to use with food. Thus, if you have an unknown plastic that some food came in, it is likely one of those four.

Here are some ideas on how to identify if you only have a chunk:

Scratch and sniff: cut the plastic with a saw or machine tool. Polystyrene, PVC, and acrylic have characteristic odors after cutting. PP, PE, and Teflon have slippery feels.

Bump with a file and see how it behaves. Keep some known chunks around for comparison.

Melt with a plastic welder or soldering iron and see what known plastics will stick to it. One that bonds well to it might be the same type of plastic.

Measure the density. This can take an accurate mass scale and something like a pycnometer. Since I don't have a pycnometer, I just estimate the volume by measuring the chunk of material.

See if it can hold strong aromatic solvents like MEK, lacquer thinner, or acetone. If it can, it's probably PE or PP. Most other common plastics (except Teflon) will grab their chests and roll over dead.

Paint filtering

I needed to filter some paint that had a rusted lid and dribbled rust into the paint (this was a clear finish and the rust would definitely would show up). I had no paint filters and I felt a coffee filter wouldn't work. However, I have a rather large end roll of silkscreen material and this wound up making an ideal filter. I used a rubber band to secure a chunk around the mouth of a container and poured the paint it. If you stop by a place that does silkscreen work, they may give you or sell you a nice chunk of this material that will last you for a number of years.

My Dumaurier Micro-Mike measures the weave with a pitch of about 0.15 mm and the strands of material are about 0.075 mm in diameter.

WD-40

I remember when WD-40 came out into the consumer marketplace where I lived. Since then, the product has been hyped to somewhat ridiculous lengths by numerous people. I've been using the product for over 50 years and I've developed some opinions about it.

The WD-40's web site will subtly try to make you believe that it's still some arcane secret formula that acts magically. In fact, if you read the MSDS (material safety data sheet), you'll come to the conclusion that it's probably mostly a mineral spirits solvent and mineral oil. It includes a fragrance to make it distinctive (3-in-1 oil does the same thing, as it's virtually all mineral oil[17]). I've long used the mental model that it's a non-aggressive solvent like kerosene and mineral oil (Liquid Wrench uses that formula). The solvent dilutes the oil and reduces viscosity, helping it penetrate things better. The solvent evaporates, leaving behind the oil.

Realize such chemicals are dirt cheap in large volumes because they're side effects of processing crude oil into gasoline. I wouldn't be surprised to hear that the can, packaging, and marketing costs for WD-40 cost far more than the material inside it (this is true for many consumer products).

The WD-40 website will also give you a list of some 2000 uses submitted by WD-40 fans. Frankly, such a list is a bit ludicrous -- you should just get a good idea of some of the general applications for the product, then adapt as your needs indicate.

The main uses of WD-40 are:

1. Lubricant
2. Cleaner
3. Rust preventative

Let's look at each of these uses.

17 Mineral oil means it comes from petroleum oil out of the ground. Mineral oil is a mostly-unwanted byproduct of petroleum refining, which explains why it's so inexpensive.

As a lubricant, I'd rate WD-40 from fair to poor, pretty much the same as I'd rate plain mineral oil. The solvent might help it get into tight spaces more easily. This rating is based on the fact that better lubricants are available. However, WD-40 has two advantages: it's easily available and it's convenient to apply, especially with the "Smart Straw" can (see below). When nothing else is handy, it's certainly better than nothing. And it will definitely lubricate things. The reason I give it a fair to poor rating is that the lubrication won't stay around all that long compared to better lubricants and it **will** gum up over time. If you don't have any other lubricants, use WD-40. The only exception to this is to **NEVER** use WD-40 (or any petroleum-based lubricant) on locks -- that lock will eventually jam up because the solvents in the oil evaporate, leaving a sticky sludge. The only lubricant I'll use on a lock is an evaporating solvent and graphite. Also never use oils around oxygen.

One common use I make of WD-40 is as a lubricant when I'm cutting metal with a hacksaw (I do a lot of hacksawing). It's convenient for this because the Smart Straw can put it right on the hacksaw blade where it's needed. Another use is for tapping metal, but I'll use my favorite lubricant for this if it's handy.

WD-40 works as a cleaner for a number of things. This shouldn't be surprising, as most people know you can use mineral spirits or kerosene to clean things. It's a relatively unaggressive cleaner that will also leave some oil behind.

WD-40 makes a good label remover for pressure sensitive adhesives. Recently my daughter gave me two nice plastic compartmented boxes her business was throwing out. They had full printed adhesive labels on the cover and inside the cover. These were easily removed by spraying with WD-40, spreading it over the label with my finger, waiting 10 minutes, and peeling the label off as a single whole unit. Quite painless and easy.

WD-40 was developed as a rust preventative (you can read about the history on the product's website). Is it any good at this? Yes, it works reasonably well at this. However, you need to realize that its protection will wear off over time, so you should reapply WD-40 after a period of time. How long? This depends on the environment. In a humid seaside environment, I'd learn from experience, but I might guess at least every 2-3 months or more often. Where I live, it's very dry, so you can go 6 months to a year. I'd suggest being conservative and do it more often than you think you should. Most of the material you spray on a surface is excess; you can get good protection by spraying and wiping with a rag.

Some company came up with the Smart Straw and WD-40 now uses it on their product (they might have funded the development or own the patent if there is one). This is an innovation that lets you spray from a small tube for pin-point application or the regular spray nozzle for wider application. The value-add is that the cheap plastic tube which has been taped to spray cans for many decades always eventually gets lost -- and always right before you need it most. So this Smart Straw solves a real problem. I seem to recall a few years ago seeing a patent number associated with the Smart Straw, but it's no longer obvious on the WD-40 website (or I don't have the patience to search); the company seems to prefer to use it as a registered trademark. There's a cheap plastic straw holder that came out years ago, but I'd personally prefer using the Smart Straw (although you can transfer the cheap plastic holder to a new can when a can becomes empty, unlike the WD-40 Smart Straw). However, you pay for it, as the company that designed the Smart Straw indicates that the premium allows the sellers to make 30% more per sale. Since a can of WD-40 lasts me for years because I don't use it that often, this isn't a big deal to me compared to the convenience. The Smart Straw on the current can of WD-40 I have in my shop is broken, leading to it popping off when I try to use it, so it's not a perfected design yet, at least when I got that can.

If you're interested, Wired magazine had a lab analyze WD-40 with GC-MS (gas chromatography and mass spectroscopy). The analysis is not terribly useful to the average consumer, but it has the statement that WD-40 is "mostly a mix of baby oil, Vaseline, and the goop inside homemade lava lamps". Baby oil is mineral oil with a fragrance.

Am I bashing WD-40? No -- it's a useful product that I'll occasionally spend my money on (I might buy a can every decade or two). It's just wise to use it for the things it's good at and not fall prey to

the marketing hype, regardless of where it comes from.

However, if you use a lot of it, you probably can get essentially the same behavior by a 50:50 mixture of mineral oil and mineral spirits (or kerosene or naphtha).

Vaseline

I use Vaseline a lot in my shop. My favorite method of dispensing it is to fill a 10 cc syringe with it and use a 14 gauge needle with the sharp tip ground off. The easiest way to fill the syringe is to put some Vaseline into one of those small individual serving cups made from polystyrene (commonly used in restaurants). Dip it into some hot tap water (i.e., you're using a double boiler) and the Vaseline will melt. Hold the serving cup with some hemostats. Then take it over the sink and pour it into the syringe. Push the plunger on, invert, and press the plunger until the liquid Vaseline comes out the top (this removes air bubbles). Now you'll have a handy device that will put Vaseline just where you want it.

> Another way is to shove the Vaseline into the syringe with a Popsicle stick and set the syringed out in the hot summer sun. Or stick it in the steam of a boiling steam kettle.

In the winter in cooler temperatures it can be hard to press the Vaseline out. In this case, mix in a little mineral oil to thin the Vaseline (this may be too much of a liquid in a warm summer though). I've found the best mixture to be about 3/4 Vaseline and the rest mineral oil, by volume. I just eyeball things. In fact, I've come to prefer this mixture to the pure Vaseline, as it also squirts well during the colder temperatures of winter (I usually leave my shop at 55-60 °F).

You'll find that 10 cc of Vaseline goes quite a way -- you don't need much because you put it right where it's needed.

Vaseline is the best and cheapest lubricant for the rollers on our kitchen drawers -- it lasts for years and they slide out like butter (the first time I used it, someone in our family pulled the drawer out way too hard and banged all the silverware inside). I also inject it into a hole I'm going to tap as a lubricant (although I prefer my tapping goop). Use it on the hinge pins in your doors (better than oil, as it won't gum up as readily). Put a small amount on the striker plates and strikers of your door locks and they'll close more smoothly.

Note Vaseline isn't a true grease (a thickened oil), but it can still do a reasonable job of lubrication. One use is to put some in the joint of some closely-fitting pliers' jaws and set them out into the sun -- the Vaseline will wick into the joint.

Many women know to smear Vaseline on the threads of a bottle of nail polish so that the cap can be gotten off later. If you work with PVC pipe, this tip is helpful to keep that PVC glue can's lid from sticking -- then you won't need a pair of pliers to get it off next time you want to use it. Squirt Vaseline onto the threads of your wood glue bottle and you'll be able to get the top off later. By the way, a better container for wood glue is the French's mustard bottle with the integral cap that twists open and closed -- it's nearly perfect as a glue container because there's no little plastic plug to lose (dishwashing soap bottles work too).

The logical extension of this was to things like glues and caulks that come out of tubes. My canonical example was an expensive tube of silicone sealant. I'd use the dang thing one time, then come back in six months to use it again and find that the whole thing had hardened. The fix is simple -- wipe the cap's threads clean and put some Vaseline on them (then you can get the cap off easier later). Put a dab of Vaseline on your finger and fill the hole to seal it. Or, if you have the tapered tip on, just jam some Vaseline in the end to seal it (squirt it in with the hypodermic syringe). When you need to use the tube of stuff later, just squirt a small amount onto a rag to clear the Vaseline and pick up where you left off. I wish I had figured this out decades ago, as I would have not had to throw out so many tubes of stuff. I've had caulking tubes half-used that were perfectly fresh when I used them again a year later. For added security on the tubes that go into a caulking gun, use the syringe to squirt some Vaseline into a wire nut and screw it onto the caulking tube's tip. There are also commercial thingies sold to seal caulking tubes and some of these work well.

For an "external" seal on a tapered caulking tube tip, you can also try plumber's putty or regular

window putty. They should seal, but be easy to get off later.

The syringe is handy to dispense a line of Vaseline down the side of a bolt or machine screw. Vaseline isn't as good for this purpose as anti-seize compound, but this is certainly a quick way to get some lubrication on those screw threads. I use it on things like drill press vise screws and C-clamp Acme threads. I also prefer it for lubricating and protecting my machinist tools, as it's not quite as messy as mineral oil.

Mix some Vaseline (50% to 60%) with some lanolin (15%) and the remainder of cod liver oil and mineral oil and you'll have a useful hand cream for chapped or dry hands. If it's too runny, melt in some paraffin wax. Or, buy some Bag Balm, as it's the same thing with a small amount of disinfectant.

Use the syringe to squirt some Vaseline on electrical connectors like those used on trailers and RVs. It has no effect on the electrical resistance, but greatly reduces corrosion. Squirt it down inside a wire nut after tightening and they won't rust.

Miscellaneous

PVC fittings

We have an acre of land with 50-60 sprinklers installed. Years ago my wife and I standardized on 3/4 inch PVC schedule 40 pipe for each sprinkler line and 1-1/4 inch polypropylene or PVC mains. Alas, my home has everything from 1/2 inch to 2 inch pipe sizes, as the previous owners installed what I can best describe as a mess.

We have hundreds of fittings around the house and it can be a challenge to keep things organized. About 5 years ago I put each type of fitting in clear polyethylene zip-lock gallon bags and color-coded each bag with vinyl tape. This worked well for the first year or two, but the bags lost transparency and rotted out even though they were kept in the shade. Now we use plastic boxes made by e.g. Rubbermaid. One box gets elbows, another tees, another unions, etc. Most of the fittings are 3/4 inch stuff. Any 1/2 inch stuff gets tossed into a bucket because we don't use it much. Larger stuff is stored in a drawer in the garage.

A standard mounting for a sprinkler is to bring a 3/4 inch PVC line to the sprinkler and insert a 3/4 inch brass gate valve just before the sprinkler. Some 4 inch thin-wall PVC drain pipe with a cap allows access to the valve. This valve is valuable to isolate the sprinkler for maintenance and close things off when blowing out the sprinklers in the fall.

Then the 3/4 pipe is terminated in a glued elbow with a 3/4 thread on the vertical portion. A schedule 80 3/4 inch nipple of the right length is used to put the sprinkler flush with the ground surface. I keep some schedule 80 PVC pipe on-hand (electrical conduit) with my pipe threader so I can make a custom nipple length if I don't have the proper size. I bolt my pipe vise onto the work table fitted to my Garden Way cart and I can do the threading right at the sprinkler.

Lab notebooks

I'm a believer in keeping good lab notebooks, as they illustrate the old Chinese aphorism "the palest ink is better than the best memory".

HP rules by Barney Oliver

These were written by Barney Oliver (HP technical VP) around 1954. They were routinely circulated to HP engineers for many years.

Reasons and Rules for Keeping Lab Notebooks

Your lab notebook is a diary of your activity on your assignments. It should be a continuous chronological account of exactly what was done, when it was done, and why; and it should be complete enough so that an engineer, using only the recorded material, could repeat any

measurement, check any result, duplicate any set-up, or even reconstruct the entire development.

You will find a well kept notebook a great help to you in many ways. It will serve you:

1. As a compact, handy, orderly reference book. When you want a piece of early data do you go madly pawing through the detritus on your desk like a dog unearthing a bone? Ever stop to think how much time you would save, and how much better an impression you would make if you could simply open your notebook to the right page?
2. As evidence of diligence. Sometimes lack of progress is not due to lack of effort. But unless you can point to the record of your efforts in your notebook, wrong conclusions may be drawn.
3. In avoiding repetition. Lost, misplaced, or forgotten data often must be taken all over again. You won't have to go through this wasted effort if you keep good records.
4. As a record of priority. One of your sources of recognition is the inventions you make. Unless your notebook clearly shows the date of conception, the full description of the invention, and the record of your subsequent efforts at reduction to practice, your position is weak and you may lose credit for what is really yours.
5. As a guide to your thinking. The ready accessibility of all data concerning you job facilitates review, helps you see where you are; what's been tried and what hasn't, points the way by revealing the best solution to date. Even the time spent making entries is not wasted, it forces careful consideration of your work and this often reveals errors or points overlooked.

The company expects you to keep a notebook:

1. To increase your efficiency (see above).
2. To facilitate supervision. It is hard to help an engineer if you can't find out what he has done, or even see a schematic of his set-up. By contrast, if he has kept an orderly notebook, it is easy to pick up the state of the project and then to discuss in their proper context those details which are giving him trouble.
3. To have a permanent record. The results of your work are company property. They must be available to any employee who needs them, whether you are still around or not. Important test data will be referred to. Your reasons for doing something a certain way will be better understood if changes are contemplated. Dates and details will be needed in establishing patentability.

You will automatically observe almost all the rules for properly keeping a notebook, if you compose it as you would a document for a time capsule, addressing your entries to some unknown engineer whom you will never meet. (In a surprisingly short time, you will be that engineer, trying to make sense out of your own earlier hieroglyphics.) Specifically, you should observe the rules on the following page.

B.M.O.

HP's Corporate Engineer's Lab Notebook Rules

1. All entries should be clearly legible, preferably in ink.
2. The first entry on any date should be the date, the last, your signature.
3. Make entries in chronological order. Leave no blank pages. Any notations out of chronological order should be so indicated and dated.
4. Cross out, but do not erase superseded entries. Leave them legible. Never tear out pages.
5. Indicate adequate topic headings to facilitate later search and indexing. Use explanatory text freely.
6. Show schematics with element values of all tested circuits. Show block diagrams of test setups. Include instrument numbers. Indicate clearly where readings comprising recorded

data were observed.

7. Adequately label and reference all curves and coordinate axes. Coordinates of page may be used. Graph sheets should be securely pasted in place. (Use new special scotch tape)
8. Intermediate calculations, if of no interest in themselves, may be made on scratch paper, but all premises and factors involved in the calculations and all results should be recorded.
9. Any entries that relate to possibly patentable material should be dated and signed by the engineer making them; descriptions of patentable material should also be countersigned, as having been witnessed and understood on the date shown, by another engineer.
10. Completed project notebooks should be filed in the Division. They may then be checked out like any book if the engineer still needs them.

Further thoughts

My favorite book for lab notebooks was the Boorum & Pease No. 21, containing 150 lined and numbered pages 8.5x10.6 inches (I have a similar book used by my father-in-law in the 1940's and it's still in usable shape). The pages are sewn in signatures, so they're going to last longer than the typical perfect-bound crap made today. These books have become pretty expensive, but then aren't your data/thoughts/experiments/conclusions worth trying to keep intact?

I also like to see entries made in either pencil or an indelible ink like a Noodler's bulletproof ink. While pencil isn't recommended for corporate lab notebooks (it's too easy to change and may not be recognized legally for patent stuff), it works well as an archival method for personal notebooks. But an indelible ink is best, as pencil can be erased or damaged by e.g. an acetone spill.

The key thought above is that you're writing material for a time capsule to a person you'll never meet. This is a good criterion, as you'll realize you have to put down many assumptions and explanations that you wouldn't need for yourself, at least at that moment in time. But it's oh-so-true that you will forget all those miscellaneous details later when your short-term memory has been replaced by other details. Then you will be thankful you "over-recorded" information, as you'll find it wasn't, really. And, of course, **the most likely person who will read that time capsule is you**, years later.

Perhaps my biggest complaints about the usual engineering/scientific notebook user is the sloppy behavior with respect to measurement units and lack of consideration of measurement uncertainties. These simply must be present in order for a later user (including yourself) to make intelligent and discriminating use of the information. Remember information is almost always used to help make decisions, so you want to help the decision-making process with objective information whose uncertainty is well-estimated. Read and learn the material in the *Guide to Uncertainty in Measurement* (GUM) if you're a scientist/engineer. Even better, take a good upper division college course in engineering statistics and then study the GUM -- you'll use the material the rest of your professional life.

A busy engineer/scientist will generate a lot of information over the years. For example, from around 1987 to 1990, I was a senior engineer at HP, getting a complicated sputtering process for thin film magnetic recording disks ready for production. I generated four or five lab notebooks at the time (they weren't all filled up, but most were fat with lots of experimental data taped in). I had gotten into the habit of leaving 4 or 5 pages blank at the beginning of each book for a table of contents. Then I'd fill in the date, page number, and title of the relevant information. This was an enormous time saver, as I could find things much more quickly. Even better, I kept an index on the computer which spanned multiple lab notebooks and could be sorted by title, page, etc. When I left that area, the scientist I turned the lab notebooks over to commented later how valuable the indexing was and the care I had taken in recording information. I also received a similar compliment from another scientist at another company I worked at in the 1970's and they still make me feel good, as I knew I was able to make my work of use to others. Most lab notebooks, frankly, get filed away and never looked at again.

Every experienced scientist/engineer knows the importance of recording your thinking in the lab

notebook. Just the act of writing things down makes you more careful and thoughtful, as you have the notion in the back of your mind that someone else will be reading that material in the future. You both want them to be able to understand and use the data as well as the more pragmatic thought of you don't want to appear to be an idiot who overlooks obvious things or makes stupid errors. In a working environment, one of your best tools is to ask a peer to look over what you've written and critique the content and conclusions. You will virtually always get new material to think about and information that will help you improve your content. If its patentable, you both sign and date it.

Removing broken light bulbs

The standard dodge others recommend is to cut a potato or sponge rubber ball in half and use that as a handle. I've never liked that method; instead, I just use needle nose pliers to break out any remaining glass and then grab the bulb's aluminum threaded portion with the pliers and unscrew it. Obviously, your first priority is safety: ensure that the electrical power is off, wear safety glasses, and use gloves if you're worried about getting cuts (I've never needed the gloves).

Lubrication is your friend for light bulbs. Coat the threads with graphite, Vaseline, waterproof silicone grease, Dow-Corning vacuum grease, silicone spray, dielectric grease, etc. and that bulb will be easier to remove later.

Fixing a pipe leak

You might want to make an emergency repair kit for when a pipe springs a pinhole leak. You can buy leak patches that work similarly to this idea and tighten with a wrench, but the following method will also work (and can actually last a number of years in a pinch). Cut up some strips of inner tube for a supply of rubber patches. Then keep a few sizes of hose clamps in the kit to clamp over the various sizes of pipe. You might want to keep a nut driver in the kit to ensure you can tighten things when needed. Coat things with waterproof silicone grease for a better seal.

Another technique that can work is to keep some braided nylon cord in the kit. Wrap the rubber around the leak and tie and lash the patch to the pipe. Start off with a constrictor hitch, put on a number of following tight windings, and finish off with a few half hitches. I used this technique on a sprinkler pipe in my son's yard in the summer of 2013 and it took all of 2 minutes to apply and be fixed. He considered it a permanent fix and covered up the pipe.

I used the exact same method with some 18 inch diameter concrete pipe in our irrigation ditch lateral. My wife got the used inner tubes free from a truck/tractor tire place.

If you're having to apply such a temporary patch to a spraying leak that you can't shut off, you can first clamp the patch in place with some tie wraps, then clamp things more tightly with the constrictor hitch or hose clamps.

Good ideas

Excluding high-tech stuff or modern electronics, there are few really new ideas around the home and shop. If you have access to old magazines such as *Popular Mechanics*, spend some time reading through the old issues looking for shop and home tips. Google has digitized many of the old issues, so you can do this online (there may be some restrictions if you're not in the US). The articles and prognostications in these magazines can certainly be naive and archaic, but some of the tips and techniques are quite clever and as usable today as they were 100 years ago.

Storing rope & extension cords

The monkey chain is a simple method of storing cords & rope. It takes time to do, but you'll appreciate not having to spend time later untangling things when you want to use that rope or cord again. Start by doubling the rope, then tying a slip knot in the end of the rope. Reach your hand through the loop and pull another loop through. Then another, and another (it's called the chain stitch in crochet work). When finished, pull the loop end through and it will lock the chain.

I have a 100 foot-long chunk of 3/4" braided Dacron rope and this storage method lets me deal with

this rope in an easy fashion. When I need to use the rope, it deploys quickly with no tangles. I store the thing in a 5 gallon bucket.

I don't use this big rope very often, but I've found it useful for kinetic pulling (a nylon rope would be even better). A neighbor once got their van stuck in our muddy lawn. I hooked up this rope to my Land Cruiser and tied it to their front bumper. I positioned my Land Cruiser so there was about 30 feet of slack in the rope, then started off and reached top speed in 2nd gear low. The rope stretched and easily pulled the van free. I've used this to pull out tree stumps up to a couple feet in diameter. Dig down around the trunk of the tree and cut as many roots as you can get to. Then a firm yank with a vehicle that gets e.g. a 20 foot running start can yank that trunk out of the ground.

In the summer of 2016 I used the above 3/4 inch rope and our 1984 Suburban to pull a 14 inch diameter limb off a tree I was cutting down. This particular limb was curved and I didn't feel safe cutting more than about half way through with my chain saw (if the limb fell while I was cutting it, it likely would have killed me). I tied the rope to it and yanked it with the Suburban. It was such a tough pull that it lifted the rear end of the Suburban up and moved it over about 4 feet into a pile of branches -- but it did pull the limb down.

All the utility ropes in my shop for use around the home are stored using a monkey chain. They never tangle and are ready to use in an instant.

You can store electrical cords with the same method.

It does take time and discipline to form this monkey chain when you're finished using a rope or cord. If you want to justify spending the time, don't use the method and measure how much time you spend untangling something. You'll probably find you don't mind avoiding the tangles and frustration.

Frayed rope ends

Rope ends will typically fray if you don't prevent it. There are a number of ways to prevent fraying, depending on the type of the rope.

An old standby is to put a few wraps of friction tape[18] around the end, but this is amateurish and won't stand up to much use. But it can be a stop-gap method.

Stranded rope can have an end splice (sometimes called a back splice) put in it. Consult a knot book for the details.

Synthetic rope can usually be melted with a flame to put a fused lump of plastic on the end. This works and is fast to make, but it's not a good technique for a rope that will be used with your hands a lot. That fused plastic can have an edge on it and you can get cut under a strong pull on the rope. One dodge for this is to heat the rope, then roll the fused end between two boards to make the melted portion a smoother surface.

An age-old method is to whip the end of the rope. There are a number of different whipping methods, but the simplest works well: form a loop in the end of some twine (say, 1 mm in diameter), place the loop over the end of the rope and start wrapping a number of turns tightly toward the loop end. When you have enough turns, slip the twine's end under the loop and pull the other end to "bury" the loop end under the whipping. It's simple and almost always works well. If you're in a hurry, an even simpler method is to tie a constrictor knot in the twine. Pull it tight with pliers on each end and it will hold ferociously (I use two constrictor knots in 1/8 inch diameter braided nylon twine to clamp rubber garden hose to machined brass hose fittings and I've never had one come loose, even after decades of use).

Another method is to get some of the plastic liquid used to coat tool handles (Plasti-Dip is one brand name). Dip the end of the rope in this stuff, let the excess drip off, and you're done. An advantage is that a bright color can help you locate the end of the rope quickly. I've found the stuff from the can is typically too thick, so dilute it with some lacquer thinner. In a pinch, any other sticky stuff (nail polish, varnish, shellac, Krylon spray, etc.) can be used in a similar fashion -- for example, dilute some Duco cement with acetone and use it to glue the rope end. If it wears out, do it again. A

18 You rarely see friction tape today; vinyl tape is much more common.

distinct advantage is that the end of the rope is smooth and won't cause an abrasion under heavy work like a splice, fused end, or whipping can. For a critical application, you'll want to worry about whether the solvent will damage the rope's material.

Another quick work-around for this is to put some suitable shrink tubing on the rope end; it's neat and quick. However, it will pull off easily, so it's a temporary hack.

Women in the shop

My two daughters were never very interested in doing things in the shop (my definition and their definition of "shop" differ significantly). However, I recently had the pleasant experience of helping one of my teenage granddaughters design and make a rubber band bracelet loom. This was an elementary shop project made pretty much by pounding nails into a scrap piece of 2x4. However, she did 95% of the work, developed some confidence in doing such things, and got exposed to some shop fundamentals. The most important lessons I think she learned were:

- She saw first-hand the value of experimenting, as we constructed a test piece to decide on how to space the nails. Thus, this was a results-driven decision, not opinion-driven like so much of the world uses. And she made the decisions.
- She learned about laying things out with a pencil, straightedge, and dividers. She saw first-hand how the dividers assured equal spacing of the nails.
- She learned a little about using a block plane to round over the edges of the wood and then follow up with a shoe rasp to remove some badly-splintered areas. She learned that it was important that something she make not cause an injury while she was using it.
- She center-punched each of the hole locations set out by the dividers. She saw me use a center punch and hammer, but then I let her use my automatic center punch, as it goes a lot more quickly.
- She drilled 57 small holes on the drill press as pilot holes for the nails.
- She saw how the pilot holes made it much easier to pound in a nail without bending the nail.
- She saw how a spacer (a chunk of 1/2" plate) can be used to ensure the nails are all pounded into to the identical depth.

She spent about half a day making rubber band bracelets with her new tool and was quite proud of it; when her mother and sisters showed up to pick her up, she enthusiastically showed them what she had built.

In case you're interested, the loom was made on the wide side of a 2x4; the nails were on a 1.2 inch square grid. There were three nails per row and 19 rows. The nails were 1.5 inches long and 0.083 inches in diameter; I used a 0.076 inch diameter pilot hole and drilled it so that about 0.5 inches of the nail protruded. My granddaughter had tried finishing nails, round-head nails, and regular flat head nails and likes the flat-head style the best.

Tragically, this wonderful teenager was killed in 2014 after being hit by a car while she was riding her bike. We still miss her terribly.

My wife, who has extraordinary mechanical abilities, told me how her father always told her to go in the kitchen and help her mother when she was young. He wasn't being mean, just traditional. But I have no doubt she would have been a superb mechanical engineer if he had recognized her talents, encouraged her, and helped her study that stuff in college. Unfortunately, at the time, she was too unassertive to insist on learning more.

I frequently ask her to critique my designs and help me with head scratchers from the shop. I make it a point to do this in front of the female grandchildren too, so they learn that it's stuff women can do if they wish and are interested in.

One of my wife's defining moments in her life came after she was divorced from her first husband. She was getting tired of always asking her brothers to come over and fix something, so one time she hired some dolt to fix something. He was less than intelligent and pissed her off because she had to

later fix correctly what he supposedly fixed but didn't. Since she was a single mom on a not-overly-large salary, she was determined never to let that happen again because she didn't want to waste her money. The next time something needed fixing, she called local supply places and asked for advice, then used her natural talent for figuring out how things work and fixed it herself. She's never looked back. I've seen her jack her sports car up, remove the wheels, and find the rock in the rotor/brakes that was causing the noise she heard. I've also seen her tackle things like taking a camera apart that I wouldn't touch, at least not without some good documentation.

Thus, make sure the females in your life have the encouragement to tackle traditional male things like working in a shop. My youngest daughter learned how to change a tire and I've seen her do a good job of changing the four tires on her car. We even bought a manual tire changer and we learned how to avoid paying a tire shop to change to snow tires on her rims.

Conversely, the boys can learn some traditionally female things. They certainly should learn the basics of cooking. It's also worthwhile to learn some sewing, so they can repair torn things, sew on buttons, etc. A good way to start is buy a used sewing machine and buy some kits to practice sewing. I remember my first sewing kit was some down booties that I used when backpacking (I bought the kit at the original Sierra Designs store in Berkeley in the 1960's). They were pretty easy to make and I felt good about the result.

Girly stuff

Women buy and use a number of things that might be of interest to a man in his shop. Usually this is related to containers for cosmetics and personal care. Typically, women just toss this stuff into the garbage when it's used up, but you want to let them know to show you the container before tossing it. You can get some pretty nice containers this way.

My wife always consults me before tossing out kitchen containers, as she's seen me use many of them for storage in the shop. My favorites are some PET containers that are used to contain instant coffee or mayonnaise, as they make good containers for nails and screws. Polyethylene and polypropylene containers are common in the kitchen for containing food, so save things like cottage cheese and yogurt containers for re-use in the shop. Even if you only use them once and toss them out, that's getting a bit more value out of them. I don't allow glass containers in the shop because the shop's floor is concrete.

My wife uses some hair-coloring stuff and it has a polyethylene container with a tapered squirting top. This makes it a good dispenser for oils. In particular, I keep one filled with Brownell's Do-Drill and use a wire nut screwed on the top to close it. Next time you drill some holes in steel, use a sharp drill at around 100 SFPM and put a drop into the hole every so often -- it makes it more pleasurable to drill holes in steel. I also keep an old contact solution container filled with mineral oil and it gets used to put a drop in whatever I'm drilling on the drill press: aluminum, steel, or even brass.

One of my daughters used a hair spray that came in a nifty aluminum can. This can is relatively thick aluminum and can make a good but short chunk of aluminum tubing by cutting it with a hacksaw (obviously, release the pressurized gas first).

I found an eyeliner bottle that one of the gals had tossed out in the garbage and it makes a pinpoint liquid applicator because of the tiny brush in it. I cleaned it out and put some acrylic plastic dissolved in acetone.

My youngest daughter worked for a year or so at a Dior cosmetics counter at the local mall and often gave me useful containers. These cosmetics can be astoundingly expensive, so they usually come in nice containers. I especially liked the little containers that their samples come in. They're good for e.g. storing some waterproof silicone grease or a small amount of Vaseline

Furniture scratches

Woodwork is going to get scratches in it. Woodworkers have known for centuries that you can cut an almond and wipe it in a scratch -- the scratch will disappear because of the oil in the almond

(walnuts work too).

Around 100 years ago a company called Zenith started selling a "Tibet Almond Stick", which is some rolled fabric saturated with almond oil. They're convenient and they last a long time -- my wife still is using one I bought in the 1970's. Give it to one of your kids and tell them to go around the house getting rid of the scratches in wood. I remember my parents asking me to do this when I was young. Vaseline can hide scratches too (try it in a scratch in an LED computer screen).

My brother is a fan of Watco oil for this task, as it's fast to apply.

Another technique is to get a stain that's relatively close to your woodwork; put it on a rag and wipe it into the scratches. My wife uses this on the beat-up woodwork in our house (decades of pets & kids) and it can perform small miracles in covering up those scratches. It's very efficient, as you get significant improvements for little work.

Poker games

These aren't tips, but are poker games that we play in our family.

Piece of shit

We find we play this game a lot; it's one my daughter and I made up. It can develop good pots because fortunes can change in an instant and, once you've played it a while, you can see that it's extremely difficult to predict what will win in the end, so it's often a good idea to stay in even if you think your hand is fairly crummy.

It's seven-card stud lowball with the rule that a pair makes the highest card in your hand wild. You take the best five cards at the end. It is very advantageous when your highest card is also the pair, as then you have two wild cards. The only other twists are that if you get three of a kind, it removes any wildness. Three of a kind is an especially disappointing thing to have happen when you start off with e.g. a pair of kings (one or two buried) and get the third one on your last card after you've bet and raised heavily during the previous betting rounds.

The colorful name of the game often pops up spontaneously when you get a particularly unwanted card, like that third king on the last card.

You'll find lots of variation -- sometimes a 98 might win (a 9 high, followed by an 8), and sometimes there are a number of wheels or near-wheels in the hand. A bunch of near-wheels leads to significant betting and large pots. A wheel is A-2-3-4-6 that's not a flush. It's the best hand you can get because it's the lowest poker hand (aces are low). Even with three people, we've seen ties that have had to go to the third card to resolve the winner.

Bust a flush

This is another game we made up. Deal 8 cards down to each player. Examine your cards; then there are three rounds of passing cards to the player on your left; you first pass 4 cards, then 3, then 2. It will be obvious where the game's name came from.

After the last pass, put the cards face down on the table, roll them one at a time and bet after each roll. You can add variations like wild cards, replacements, buys, etc. Even with three players, full houses are common, so straights and flushes rarely win.

You also have to learn how people play. Beginners will keep their high cards and pass the low cards. This sometimes leads to the strategy to e.g. keep the low cards and pass the face cards. But you can also get burned -- a few days ago my daughter was a snake in the grass with a beautiful royal flush and cleaned up.

With 2 or 3 people, you'll often get back a card or two that you originally passed.

Blood and guts

Everyone antes and you deal n cards down to each person; you state the game as e.g. "n high", "n low", etc. The person to the left of the dealer has the first chance to go in or go out. If he goes in,

then the next person either has to say "I'm in" and puts his cards near the pot (this means he thinks he can beat the hand of the other person who went in) or says "I'm out". Each person in turn has a chance to go in or out. If only one person goes in, then he wins the pot and the deal is over. If more than one person goes in, the loser(s) must match the pot and add in an ante. Everyone who didn't win antes again.

If no one has put their cards into the pot yet, if a person doesn't go in and a person to his left does go in, then the person who didn't go in has another chance to go in. This is sometimes called "snake in the grass", especially when that person has a good hand. He doesn't go in, indicating he doesn't have a good hand, which often encourages someone else to go in. Then when it comes around to him again, he goes in -- he was lying in wait for someone to lose and keep the pot growing. Of course, the risk is that no one else goes in, causing a new deal and not being able to profit from the good hand.

The name derives from the fact that the pot can sometimes get driven up pretty high and it takes guts to go in on a high pot -- and lots of blood can be spilled on a high pot.

The usual mode of play is to continue dealing with the remaining cards in the deck, as this cuts down on shuffling. It also means it can be useful to remember what has occurred before to help you evaluate the quality of your hand.

One hand sometimes played is e.g. "one high Indian". You can't look at your card and you put it up on your forehead so everyone else can see it. Then you play normal blood and guts. You decide whether to go in by reading the other players and making guesses. There's lots of bluffing, lying, and laughing going on.

2 or 22

Face cards count a half, aces are 1 or 11, and all other cards count their number. The objective is to get a card sum of 2 or 22, so it's a high-low split-the-pot game. One card is dealt down, then one up. The best hand you can get is a pair of aces, as you can then go both high and low (you have 2 and 22, so you will win or at least split the pot with anyone else who has 2 or 22). The dealer asks each person whether they want a card or not; you can refuse or take a card at any time. After each round of asking each player whether they want a card, a betting round ensues. When one or perhaps two people are going low, it's common for the low players to bet freely, thereby "bleeding" the players going high (because a person with a winning low hand knows he's going to at worst split the pot). People taking cards are obviously going high. The bleeders have to judge how much they can fleece the people going high; if they bet too much, many folks will drop out.

The game ends when nobody takes a card. There's a final bet, then people declare whether they're going high or low. Take two chips under the table and bring up 0, 1, or 2 chips in your hand. 0 means you're going low, 1 means you're going high, and 2 means you're going both ways. If you go both ways, you have to win or tie both ways; otherwise you lose, even if you win at e.g. low.

Ties split their share of the pot. For example, if players A and B both got 23 and player C went low, player C gets half of the pot and players A and B each get one fourth of the pot.

When I was in high school, we preferred 3 or 33 because the game would last longer and generate bigger pots.

Labels

The Avery 6490 labels are nice to have. These are adhesive labels for floppy disks that have an adhesive which lets you peel them off easily. I have a box of these labels I bought in 1999 (it was for a software product I was shipping on a floppy disk) and I didn't use them all, so I still have some. Cut them to size and use them to e.g. label parts boxes in the shop. When you want to put a new label on the box, they're easy to change. Contrast this to the typical label that needs to be removed with a solvent or a hot water soaking.

Spray paint the CG

For things you have to carry around the yard a lot (saw horses, shovels, ladders, boards, etc.), spray paint the location of the center of gravity with e.g. red paint. This lets you spot where you have to place your hand to carry the item so that it doesn't tilt. Friends will wonder why there's a spot of paint on the thing; you can spend some creative juices coming up with wacky reasons.

Pulling vinyl tubing in vinyl tubing

For the last years of her life, my mother-in-law had to live full time on supplemental oxygen and, thus, had to drag a 10 m tube of 1/4" vinyl oxygen tubing around with her from her oxygen concentrator machine. Unfortunately, she had a cat that liked to chew on the vinyl tubing. Chemicals like bitter apple that can be put on the tubing to give it a bad taste simply didn't work (the cat probably thought it was a tasty mouse extract because she kept putting holes in the tubing). The local place that supplies the tubing through Medicare said they wouldn't replace any more damaged tubes, so my wife decided she needed to come up with a solution.

The constraints were that the solution needed to protect the tubing from the cat's teeth, be flexible, and not heavy to pull around, as my mother-in-law had trouble getting around (she was 89 years old with a number of health problems, including cancer). One solution would be the helically-wound plastic loom used to capture wire bundles. But it was ruled out because it would catch on door edges because of the slit or corrugations.

Both my wife's and my original thought was to just put a larger piece of vinyl tubing over the 1/4" tubing. But we knew it would be a challenge to get the 1/4" tubing through the larger tubing. My wife found some 5/16" ID vinyl tubing at a place that specializes in beer brewing stuff (the local hardware stores didn't have this size). She got 10 m of it.

I recognized that the problem was going to be that I couldn't lubricate the tubing to help ease the pull (oils and pure oxygen are a no-no because of the fire hazard). And I didn't want to use something sticky like diluted dish soap, as I'd never get it out afterwards.

My first thought was to drop a weighted string through the 5/16" ID tubing, then use the string to pull the 1/4" tubing through. I found a nail that was 1/4" in diameter and cut off the head. Then I turned down the last 20 mm to about half that diameter and put some barbs in it. I then lashed some 1/16" braided nylon twine that I use a lot ("Handy 100") to the nail. I used the same method as whipping to attach it to minimize the growth in diameter.

Unfortunately, this was still large enough that it wouldn't slide through the 5/16" ID tubing by gravity. That was OK, because the technique I had up my sleeve was to use compressed air to blow the nail through the 5/16" ID tubing. In fact, that worked fine with my nozzle with the rubber tip. The only issue is that you need to feed the twine in with a screwdriver, so you can only blow the nail through a little at a time.

Once the twine was all the way through, I whipped it to the 1/4" tubing, pulling it tightly to collapse it a bit. We used a little water as a lubricant and it pulled through in short order. If you don't use the water, it will likely jam in the tube about half way, so make sure you use the water. Set it out in the sun to evaporate the water.

Overall, it took us about an hour to do this and it was satisfying to see the end result. More satisfying will be the questions from others asking "How did you do that?". Mechanically-knowledgeable people will know that it's not a trivial task, especially if you can't use a lubricant (of course, the water we used was a lubricant). We'll just say you pull the tubing through with a piece of twine. When they ask how to get the twine through the tubing, we'll just say "Use a 10 m screwdriver".

Update: my wife decided not to use this tubing-within-tubing because it would probably be too bulky for her mother to pull around the house and instead simply covered the tubing with some fabric that she folded over and sewed the joint shut. This was quick to make and stopped the cat from chewing on the tubing.

1/8" braided nylon in the car

Keep some 5-10 m chunks of 1/8" braided nylon rope in the car's glove compartment. They will get used for tying things down and other miscellaneous tasks. Make sure to replace them when you're done so they'll be available when needed.

Wind them up around your hand, then wrap tight turns around the bundle. Slip the end under the last turn and pull tight. Pull on the free end to release it and you can deploy it quickly.

Another favorite material is a 1/16" diameter braided nylon called "Handy 100" that doesn't unravel very readily. I use both of these rope/twine materials a lot.

Door stop

I recently used one of our spare bedrooms for my office/lab/drawing table. The door to this bedroom has an unbalanced door that will swing to about 45° open. While I could no doubt get out screws, levels, shims, etc. and try to fix it, it was much easier to fill an old gallon jug of some carpet cleaning chemical with water (a bleach or milk jug would also work fine) and set it next to the door. It's close enough to the door's swing to provide a small amount of friction so the door stays open. But it easily pulls shut. Cheap and no work except for filling the jug with water. Since I virtually never close the door, it was a simple solution.

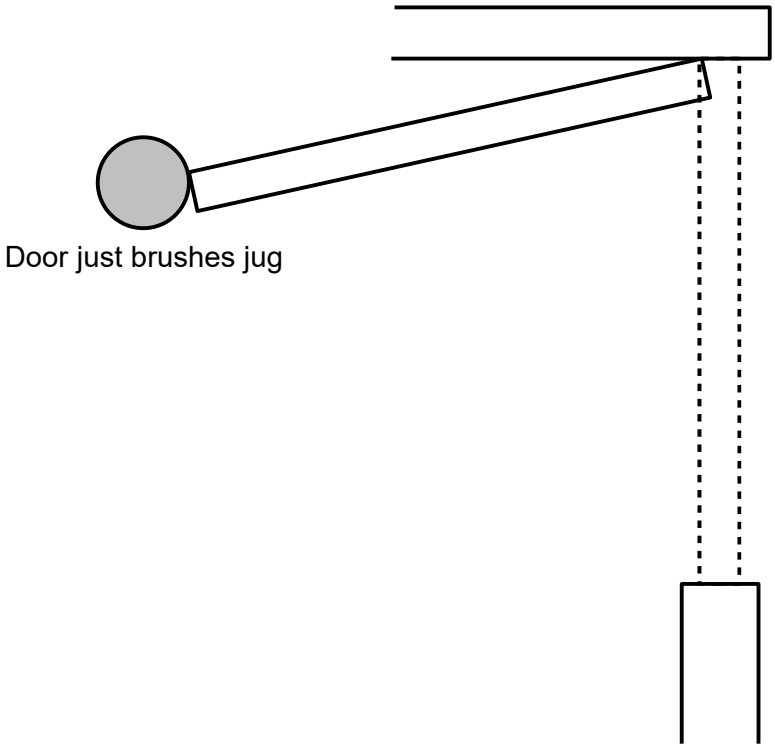

Cat scratcher

Here are two ideas for effective cat scratching devices. We have commercial examples of each and our cats use them both rather assiduously.

The first is a cardboard tube wrapped with a 1/4" fiber rope such as sisal or manila hemp. The unit we have has some clever plastic injection-molded pieces that let it be broken down for packaging, but then assembled with a screwdriver. You can make it from wood if you can fashion a round piece to fit flush with the tube; the two pieces are item 1 in the following figure:

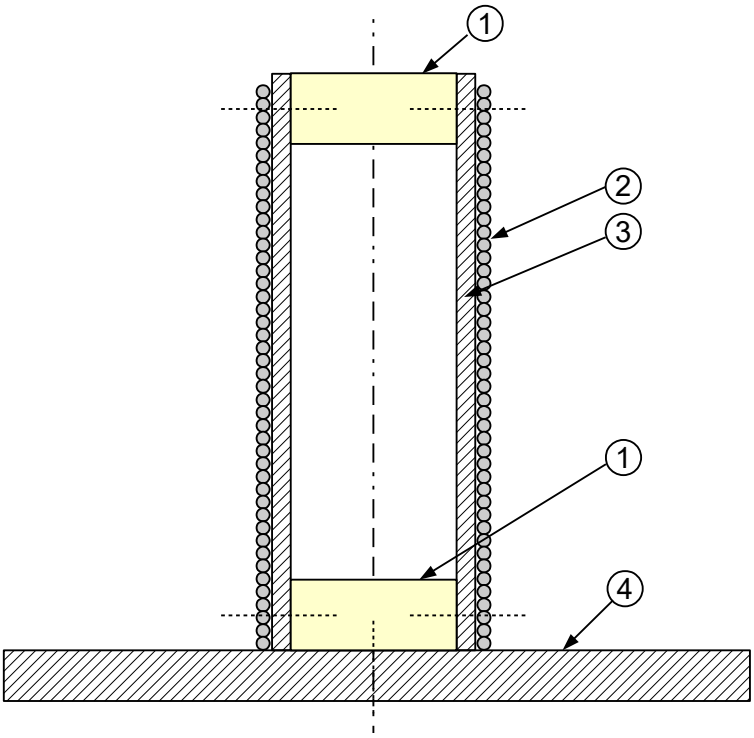

Item 2 is the rope wrapped helically around the tube 3. The tube should be a heavy cardboard mailing tube; ours is 2.5 inches in diameter. The lower plug for ours failed, so I made another one from a 2x4. The dashed lines show the screws that hold the things together. The rope is stapled to through the cardboard into the wood. Our cats will use this scratcher so much that the rope gets torn to shreds. My wife will use her hot melt glue gun to repair things, but ultimately the rope needs to be replaced. If the tube's outside diameter is D, its height is h, and the rope diameter is d, then you'll need a length of rope at least $\pi\, Dh/d$ long. The base 4 was made from particle board and secured to the bottom plug with a flat head bolt (the particle board was countersunk). The base was covered with some carpet.

However, this rope design won't stand up to years of use and I don't feel like buying chunks of rope to replace the stuff that gets ripped up. After a couple of years of use and numerous fixes, it was finally tossed out.

A better design is the following:

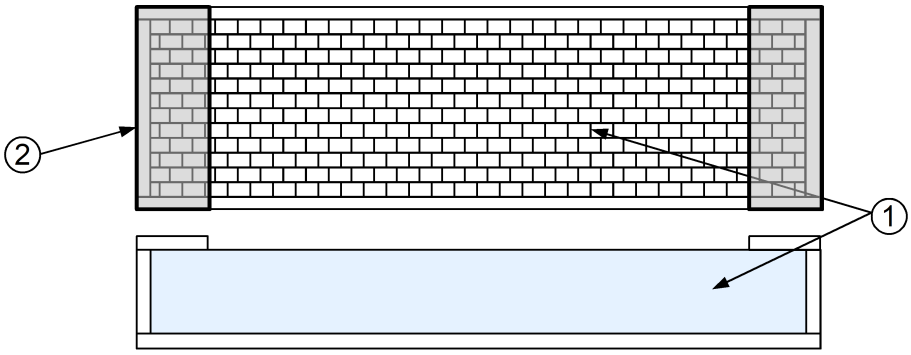

This is just a simple box (ours is made from cardboard and is about (45 x 465 x 130) mm) that holds strips of cardboard shown as item 1 in the drawing. These strips are accurately cut so that they are of uniform height and length; they fit snugly in the box. I haven't taken the box apart, but I would imagine the strips are held to the containing cardboard box with a cheap adhesive (and, thus, there's no need for the end caps 2). You can make the strips 1 from an old cardboard box. A simple

wooden container can be thrown together and it will last a long time. To hold the strips in place, an alternative if you build a wooden frame would be to use a small board 2 at each end screwed to the sides. This allows easy replacement if you use screws. Or, for fast construction, just make a surrounding open-top box and glue the edges together. Woodworking glue works well on cardboard if you clamp it.

The key to this being a good scratcher is to saturate the cardboard with catnip. The only downside is that there will be small pieces of cardboard around it on the floor after the cats scratch. But this is much better than them using Mama's couch! By the way, our cats far prefer this cardboard scratcher for some reason. One of the cats often sleeps on top of it. After a number of months of use it has deep gouges in it and, for some reason, they love to chew on it and tear it up with their teeth. It was given to us, but even if we had to buy it, we would have been satisfied with the money spent, as the cats have used it so much. The cats finally ripped it to shreds, so it's time to build another one.

Rock dolly

The following idea was in *The Family Handyman*, May 2013: a rock carrier that secures to a hand truck and is made from plywood, screws, and some U-bolts.

Rock dolly

Need to move stones, potted trees or bags of soil? Make your own sturdy garden dolly from a two-wheel hand truck and plywood. You can make the box any size you want (a box 31 in. wide will still fit through a doorway) and then attach it to your hand truck with U-bolts. It can handle a lot of weight and is easily removed. It's also low to the ground, so you can just roll stones and other heavy items right into it without lifting.

Les Beeckman

Things I like about this idea are:

- It's simple to make.
- It's inexpensive.
- Properly made, it will be rugged.
- Make different sizes for various uses.
- It has a variety of uses.
- It turns an already useful tool into another useful tool.

The whole thing can be made with around 24 screws, plywood, and two U-bolts (although when I build one, I might use four U-bolts). I'd recommend wing nuts for the U-bolts so you can install it and remove it without tools. It would really be great on a heavy-duty dolly with good pneumatic tires, as it would then be easier to move over the lawn.

If the thing is to be used for transporting things through the house, make the overall width appropriate to fit though the home's doors.

It could also be made with sides that come up higher and a front door that is hinged or pulls up and

off. Then it could also be used to haul dirt and sand. Screw Velcro straps to the outside of the sliding door and it can be secured to the hand truck when you want the front open.

One of the beauties of a hand truck is that if the center of gravity of the load is farther away from the truck's spine, you just tilt it over farther to get the desired balance.

Tip for car keys

I always carry my car keys in my pockets, but even with bellows-style pockets, the keys can sometimes unknowingly fall out when you lay down or sit in a recliner. I fixed this problem years ago by using the clips from an old name badge from work. They have excellent clips, as there's an overhanging lip that will clamp well to cloth but not damage it. I use a small split ring to connect the clip to the main ring (get the split rings at a fishing tackle store). Then I clip the keys to the inside of my pocket and have never lost my keys since.

Door hinges

The door hinges in your house probably need lubrication, especially in an older house. A hinge in need of lubrication will either exhibit a lot of friction (i.e., the door won't close without a firm shove) or make noise.

Here's what I've found that works well. First, never use oil to lubricate the hinge pins -- oil will evaporate over the years and leave a gummy mess. Instead, use a grease (a grease is an oil with thickening agents that help it stick around and continue to lubricate). A good choice could be axle grease and a small tub of it is inexpensive.

Instead of grease, I use Vaseline because it's always handy around the house. It won't last as long as a good grease, but it will far outlast oil.

The grease/Vaseline is the easy part. The hard part can be getting the hinge pins out of the hinges, especially if they haven't been removed in decades by negligent homeowners. Here's how I do it.

First, see if there's a hole on the bottom of the hinge to allow a pin punch to be used to knock out the pin. The size of punch to use is typically 1/8" to 3/16", sometimes 7/32". A substitute is to cut the sharp tip off a suitable nail and file it flat. Once in a while you'll come across a hinge where you can't use a pin punch, so here's another technique. Grind a cold chisel's tip to the following shape:

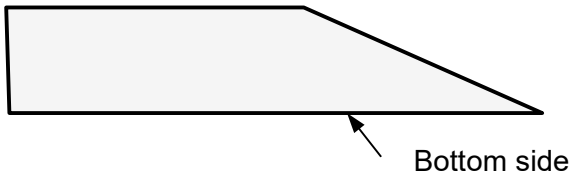

The angle isn't critical; mine is about 45°.

Close the door (lock it to prevent someone opening it from the other side) and place this chisel's tip between the hinge pin on the top and the hinge (put the bottom side of the chisel against the hinge) and start hitting the chisel with a hammer. Start gently, but on an old hinge you may have to do a surprising amount of banging. You'll also likely ding up the flange on the hinge pin, but this can be hidden by turning it around when you re-install it.

Once you've gotten the hinge to come up about 1 mm with the chisel, you can switch to using a screwdriver to drive the pin out. If you're not handy with such things, make a shield from something to place behind the hinge so that if you slip, you hit the shield and not the door or wall. You should be able to drive the pin out. Take out only one pin at a time, clean it, lubricate it, and re-install it.

If in spite of lots of banging you can't get the pin started, you can take the hinge screws out and take the hinge/pin assembly to your shop. Soak it in e.g. a kerosene/oil mixture to try to make it easier to take apart. Be careful with what you use if the hinges are painted.

If you want to be thorough, use a solvent on a Q-tip and clean out the female sections of the hinge

on the door. You'll likely get a lot of black grimy stuff. Clean the hinge pin in solvent too. If the pin is rusted, you can use a wire wheel to remove junk and follow up with some fine sandpaper. If the pin is rusted, then the female sections of the hinge are probably also rusted -- you can probably cobble together a tool using a dowel and some fine sandpaper or steel wool to get inside the hinge and clean it. The pieces rusted because someone didn't lubricate them often enough. If the female section is really bad, you may want to unscrew it from the door and take it to the shop to work on it.

Use a Q-tip to put a thin coating of Vaseline or axle grease inside the female sections. Coat the pin with Vaseline or axle grease and re-insert it into the hinge. I tap it down with the hammer until it is about 1 to 1.5 mm from being seated; this makes it easier to get out next time because you'll only need the screwdriver. Then do the other hinges in a similar manner.

Make yourself a note to lubricate the hinges in another 5 years or so. If you do it on a regular basis, it will go simply each time and you won't be faced with a rusted hinge or a ding in the wall/door trying to get the pin out.

This is a good time to inspect the hinge screws. Make sure they're all tight. If they are stripped out, then this could be a good time to replace them with longer screws. I like to use 3" long flat head outdoor screws with a Torx T25 drive. They're self-drilling, so you should be able to drive them into the studs next to the door frame.

> **Warning**: first check to see that the original screw hole is not at an angle -- if it is, the longer screw will just follow the existing hole and it may protrude from the door if the angle is large enough or the screw is long enough (guess how I know this). If this is the case, get a drill bit and drill a new pilot hole at the proper angle.
>
> Drilling that hole can be easier said than done. The safest way is probably to drill out the existing hole to the size of a small dowel you have on hand and epoxy a piece of dowel in the hole to fill it. Then you should be able to drill a new hole without the drill trying to follow the old hole. For a faster solution, omit the epoxy and make sure the dowel is a snug enough fit into the drilled hole that you have to hammer it home. Verify this first in a piece of scrap wood.

If a hinge still makes noise after being cleaned and lubricated, it's probably misaligned for some reason. I've seen the door jamb crack where the builder installed the hinge screws crooked (this was on a 40+ year old door) and this led to misalignment.

Christmas in October

For some reason, our garden's tomatoes often ripen late in late September and October. In our latitude (about 45° north of the equator), we start getting freezing weather in October. But since our tomatoes are still delivering luscious ripe tomatoes (far better than the cardboard tomatoes from the grocery store), we wanted a way to protect them from the frost (one good frost will kill the plants).

We use cages of concrete reinforcing wire around each plant, so one technique we've used in the past is to wrap blankets around the plants. But they ideally need a little heat too. The obvious solution was to use some electric lights and since Christmas lights come on strings that can be stretched over a distance, it was a natural to put a few bulbs under each plant and put the blankets over the cages. Yes, it takes time to wrap the blankets before dark and take them off in the morning, but since we had hundreds of tomatoes left on the plants, it was worth it. Obviously, use a GFI-protected outlet for this.

This has worked well, even on nights where the wading pool for our ducks froze over with a 6 mm skin of ice. In fact, it kept us getting tomatoes from the garden up until the beginning of December, when we basically ran out of ripe tomatoes and picked off the green ones. And we've typically had a few snowfalls by this time.

Digging holes

Probably the most important tip for digging holes is to get moisture into the ground. Moist dirt is much easier to dig than hard dirt -- and I mean an order of magnitude or more easier. The best tool for this is to put a sprinkler over the area you want to dig in and put on a goodly amount of water

ahead of time. Here, "goodly" is hard to define, but here's what I do when I'm about to hand-dig a new sprinkler line. I'll put an impact-type sprinkler on the hose and stick it into the ground. The hose is attached to a faucet that runs when our sprinklers are on. Our sprinklers run for about 3.5 hours, so I apply water to the area to dig in for the same time. I like to leave this sprinkler in place for a few days; this lets me have good soil to dig in down to somewhere between 6-12 inches (15 and 30 cm).

> This advice applies to the lovely soil where I live (a volcanic floodplain). If you have lots of rocks or hard pan, then water isn't going to help much. I remember digging holes when I was in college in central California and hitting really obnoxious hard pan -- it was miserable to get through and the only hand tools that worked were heavy picks and 6 foot long digging bars.
>
> Lots of rocks or roots in the ground also make for a miserable digging job.

When I have to dig a fence post hole and I know the ground is hard, I'll dig a hole down a few cm and fill it with water. Then I dig more the next day and fill it with more water. You'll get a feel for how much water can percolate down through your soil in one day. For my soil, I can put in 15 cm of water in a hole and be pretty sure it will have soaked in by the following day.

Another rule I've developed about digging holes is that our initial judgment of how big the hole needs to be is often off by a factor of 2 or more in the direction of being too small. This is especially true when repairing sprinklers and sprinkler pipes because you need room to swing pipe wrenches and other tools as well as the ability to sometimes move the pipes a small amount.

One of the best things I ever did was build a dirt platform (from a chunk of 1/2 inch plywood about 3' by 6') for the little garden cart we got from Harbor Freight. It has three sides on it that let me pile dirt up to 10 inches thick (25 cm). This cart lets me put 3 or 4 cubic feet (about 0.1 m^3) of dirt on it and move it around. This keeps the dirt off the grass and lets me move it if necessary.

Winterizing engines

Unless you have specific instructions to the contrary from an engine manufacturer, here is what I have found to be the best way to prepare a gasoline engine for storage over the winter (for example, lawn mowers, rototillers, weed-whackers, etc.).

The main enemy is evaporating gasoline. When the volatile hydrocarbons in gasoline evaporate, a sticky material (called "varnish") is left behind. Varnish causes moving parts to stick and small holes to get plugged. The net result is that the engine runs poorly or not at all. The usual fix is that the carburetor needs disassembly, cleaning, and new parts. Sometimes on small engines it's cheaper (if you value your time) to just buy a new carburetor.

There are different ways to avoid having an engine "varnish up". One way is to run it periodically -- say, every two weeks.

Another way is to pour a chemical into the gas tank that helps keep the gas from evaporating. These are typically some type of alcohol and can be purchased from the local auto supply store. You're paying a lot of money for an inexpensive chemical though.

Over the years, the method I've settled on -- because it is so reliable -- is to simply run the engine out of gas at the end of the season. I drain as much of the gasoline as I can from the gas tank, then let the engine run until it quits. That's it. It's also a good time to change the oil so it will be fresh when you start up in the spring. A good thing NOT to do is to drain the oil at the end of the year and tell yourself you'll remember to fill it in the spring. That's a recipe for disaster -- if you forget and run the engine, it can seize up and ruin the engine.

Note this doesn't require e.g. finding a fuel line valve and turning it off (I've had plastic valves break that haven't been used in a long time).

If you need to use the device another time or two, just fill it up and use it. Then run it dry again when you think you're finished for the winter.

If the device has a battery to start it (like our riding lawn mower), I take the battery into the garage and store it over the winter. I try to charge it once every month or two, but a dedicated float charger is better.

In the spring time, just fill the tank with fresh gas (don't use gas from the previous year -- in the fall, dump the remaining gas into your car's tank and get fresh gas for the small engines in the spring) and start it up. If the engine is in good shape and properly adjusted, it should start up in the spring on the first pull.

> You'll occasionally get bad gas. I had this happen in the summer of 2016. I used two different pressure washers, a chipper, and our riding lawn mower and watched them all fail to run well. The first one or two were declared to be engine problems, but after the fourth occurrence I started to suspect the gasoline. This was gasoline from a Stinker station (common in the northwest US) and I swore I would never buy gasoline from them again.

Years ago I didn't drain the gas out of our engines and had to spend hours disassembling and cleaning the carburetor -- or buying a new one when the old one still wouldn't work. I suspect once you start running each engine dry in the fall, you'll never bother with any other method.

Of course, this applies to cars too. If you have a car that you know won't be run for quite a while, run it out of gas and you probably won't be faced with an expensive carburetor rebuild later.

My brother lives near the ocean and says you should additionally spray some fogging oil into the air cleaner while the engine is stopping to help things avoid rust. Everything ferrous rusts near the ocean, even stainless steel. Engine manufacturers tell you to remove the spark plug and squirt some oil into the cylinder and turn the engine manually a few times to distribute this oil.

Building things from wood

I wind up building a number of things around the home with wood, often 2x4 stock. I've standardized on what I consider to be a near-perfect fastener for these things I build. This fastener is a 3" long #9 or #10 flat head exterior screw with a Torx T25 head. I've driven many tens of thousands of screws in my life and the Torx is one of the best heads -- much better than square, Phillips, slotted, or Pozi-driv. My brother and son-in-law have as much or more building experience than I do and they feel exactly the same way. These hardened screws are coated to keep them from rusting. If money was no object, I'd probably get some of these in stainless steel, but these coated steel screws are a good compromise. I've used them in outside applications for a decade, then removed them and seen that they're good enough to toss back in the new box for reuse. Contrast that to the typical galvanized fasteners that will completely rust out in a few years in a wet environment.

The reason for the 3" length is that this lets you attach two "2 by" boards along their short dimension and not have the screw protrude. In reality, because you usually drive the screws in under power, they'll bury themselves a bit and the sharp point may protrude a bit from the other side. I either use a drum sander in a drill to grind these off or remove the screw and grind off the tip. This is actually a poor design from the fastener manufacturers because someone feels it's important to have an exact inch length. It would have been smarter to make the screw about 0.1 inch less in length to avoid this problem on standard lumber. But it was almost certainly decided long ago by some marketer who didn't think rather than someone who actually uses the product. And it's exacerbated by the lumber manufacturers who try to save money by cutting their lumber thicknesses at the bottom end of the spec. The average consumer will always think a 3 inch long screw is better than a 2.9 inch screw unless they're capable of quasi-sentient thought.

I use a 1/8" diameter drill bit on a 1/4" hex shank as a pilot drill for these screws. Because these screws have a slash at the tip and they are hardened, they can drill their own hole. You can often dispense with the pilot hole in soft woods, but it's good practice when you're near the end of a board to prevent splitting. My cordless 1/4" impact driver will drive 4 inch Torx drive screws into solid oak without a pilot hole.

Radiator hoses

You know how hard it can be to remove some radiator hoses on cars that have lots of miles on them? I've started putting waterproof silicone grease on the hose and the part it slips over. It makes them easier to take off later. The grease should be inert and is rated to over 200 °C, which means it shouldn't be bothered by the heat from the engine.

Don't slop it on, as you only need a light coat and too much might mean the hose could come loose or leak, even if it's clamped. I've read that some people feel this is a no-no, but I've used it on all our cars and never have had a problem.

This waterproof grease is handy on threads too. I use some hefty 1.5" galvanized threaded unions on our ditch pump and these can be hard to get apart. But if you grease the threads with silicone grease, they're a snap to get apart (this also works great on 2" PVC threaded unions too). You can also try antisieze lubricant on steel threads, as it also works if you don't have the silicone grease (but don't use an oil-based lubricant on PVC). The nice thing about the silicone lubricant is that you can use it on lines that carry drinking water.

My brother worked at a fish hatchery and said the standard for installing flex hoses 2 inches to 8 inches in diameter was to soften the hose end in hot water, then jam it on the fitting with dish soap as a lubricant. He said for one 3" hose he had to put on, it wouldn't go on with the usual method and he eventually got it on with some RCBS water-based resizing die lube (get it from a sporting goods or gun store).

Painting over screws

When you construct something with screws and plan to paint over it, use some Vaseline or waterproof silicone grease to plug the holes or slots for the screwdriver. Then, years later, when it's time to take things apart, the screwdriver will still fit into the slot/hole without it being jammed by dried paint.

A better method is to drive the screws in under power so that they countersink themselves a few mm under the wood's surface (or use a counterbore to do the same thing). This is nice, as you can just paint over the holes and the screw heads don't get coated.

Curved razor blade

When I started shaving, the main non-electric razor available was the Gillette double-edged blade and metal holder. It never gave me a very good shave (too uncomfortable), but the razor blades are still useful. Here's how. Obviously, be careful when you do this, as you can get cut if you slip.

Bend the double-edged razor blade over so that it snaps into two pieces (the bend is along the middle long axis of the blade which is parallel to the blades' edges. Then bend over each end and snap them off; this makes a short curved cutting surface. Bend each end over in the same direction. You wind up with something like the following:

This little device is superb for trimming off annoying hangnails and other aberrations in your fingernails. The curved surfaces are just the ticket for getting into tight areas to trim something. I keep a magnet on my computer's case that holds one of these within easy reach.

They are best when they're new and sharp. If you mostly use the little curved end, you can break off the end when it gets dull and get a fresh cutting surface. I usually use mine until it's about half its original length.

One other tip is to get a 4X jeweler's loupe. These are easy to "scrunch" around your eye to hold them in place -- then you can get a detailed view of what you're working on and have both hands free. Don't be tempted to think that more magnification is better, as these simple magnifiers lose depth of field as you go to higher powers. The 4X loupe is, in my opinion, the best general-purpose loupe; its focal length is about 60 mm. I've even used my loupe as a hand-held macro lens for my little digital camera to get close-up pictures of things. I have a 7X loupe in my shop that's also pretty handy; 10X is a bit too much magnification because the in-focus field of view is fairly small.

When these little razor cutters are new and sharp, they'll even cut off those little pieces of skin that pop loose when the cuticle sticks to the nail. However, my wife found a safer tool for these: modified fingernail clippers:

These move in close to the base of the torn skin and clip it off.

Thus, my fingernail and toenail kit contains regular fingernail clipper, the above modified clippers, toenail clippers, this bent razor blade tool, and a magnifier.

Electrical

Save your batteries

For battery-operated tools that don't get used all that often, get in the habit of disconnecting the battery after you're finished with it. The battery won't leak and if it's alkaline or lithium, should have a good shelf life.

For batteries that can't be removed and stored with the device, cut a small tab from an index card and insert it between the battery and its terminal. This electrically disconnects the battery circuit and you won't have the batteries leak. Just yank the tab to start using the tool.

Battery current

I've not tried this, but some day I'll use it. Get a double-sided chunk of thin PC board, solder wires to each side, and run them to your ammeter. Then slip it between the batteries in a battery-operated device and you can measure the current being drawn by the device:

Depending on the current draw, your ammeter may or may not affect the device's operation.

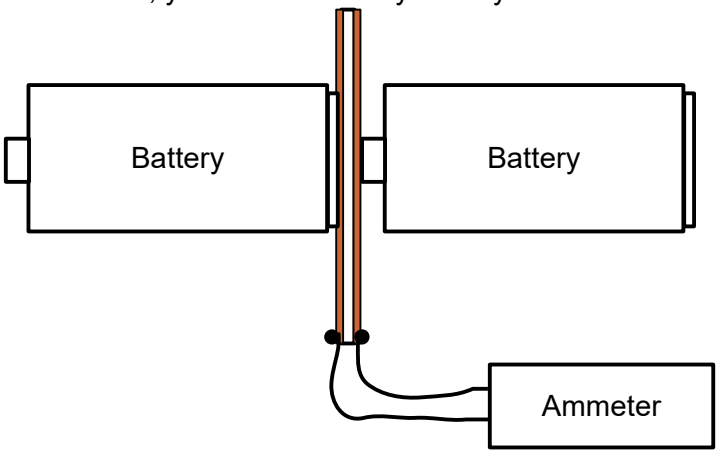

Make your own extension cords

The typical crappy extension cord you purchase is insulated with PVC primarily because it's cheap. And it works OK for light-duty consumer stuff. However, it tends to be stiff, as typified by bottom-feeder electrical appliances, especially in colder weather. It makes me appreciate the rubber insulation on some of the nice tools I have, such as a beloved Porter-Cable laminate router. I run my table saw on 220 VAC and I made an extension cord for it from rubber cable I bought at a local electrical supply place. The cord was grade SOW and the insulation is rated to 90 °C; it's a 12 gauge 3-conductor cord that's 5/8" in diameter. I put some 20 amp connectors on it so I can use it on any tool in the shop (and all my 220 V outlets are 20 A). Except for some dust, it looks brand new and is still wonderfully flexible, yet it has been working just fine on my table saw for decades.

Thus, though that rubber cord may be expensive compared to the cheap PVC stuff, it will almost certainty outlast PVC if it's taken care of and continue to be flexible.

In the late 1980's, I worked in R&D in a thin film fabrication facility and spent 6 months traveling all over the US evaluating different methods of measuring our thin film thicknesses. I finally settled on a Rigaku x-ray fluorescence unit; it came with two heavy-duty power cords that used PVC insulation. Our maintenance techs decided to use some in-house cable to wire the XRF unit when they installed it in our factory, so they gave me the old PVC-insulated cables (they were going to toss them out). I've been using those cables for over 25 years and they have also given good service. One is used to extend my 50 A welding outlet about 50 feet and the other is a general purpose 220 V extension cord. Unfortunately, neither came with ground conductors, so I had to tie-wrap a green wire to the cable, which looks pretty ugly. But it works. I'd note that these cables have far more PVC insulation in them than the typical consumer extension cord and they seem to be more flexible.

References

A number of these old books are available on Google books.

dpk F. Colvin and F. Stanley, *Drill Press Kinks*, Hill Publishing, 1908.

rk F. Colvin and F. Stanley, *Repair Kinks*, Hill Publishing, 1908.

stk F. Colvin and F. Stanley, *Screw Thread Kinks*, Hill Publishing, 1908.

ptk F. Colvin and F. Stanley, *Press Tool Kinks*, McGraw-Hill Publishing, 1908.

tmbr G. Lautard, *Machinist's Bedside Reader*, volumes 1, 2, or 3, http://www.lautard.com/.

ilt2b *International Library of Technology*, volume 2-B, International Textbook Company, 1903.

mstm W. Leonard, *Machine-Shop Tools and Methods*, 5th ed., Wiley, 1908.

mtm F. Jones, *Modern Toolmaking Methods*, Industrial Press, 1915.

sk R. Grimshaw, *Shop Kinks and Machine Shop Chat*, Henley, 1896.

gk F. Brownell, *Gunsmith's Kinks*, volumes 1 (1969) and 2 (1983), F. Brownell & Sons, Iowa.