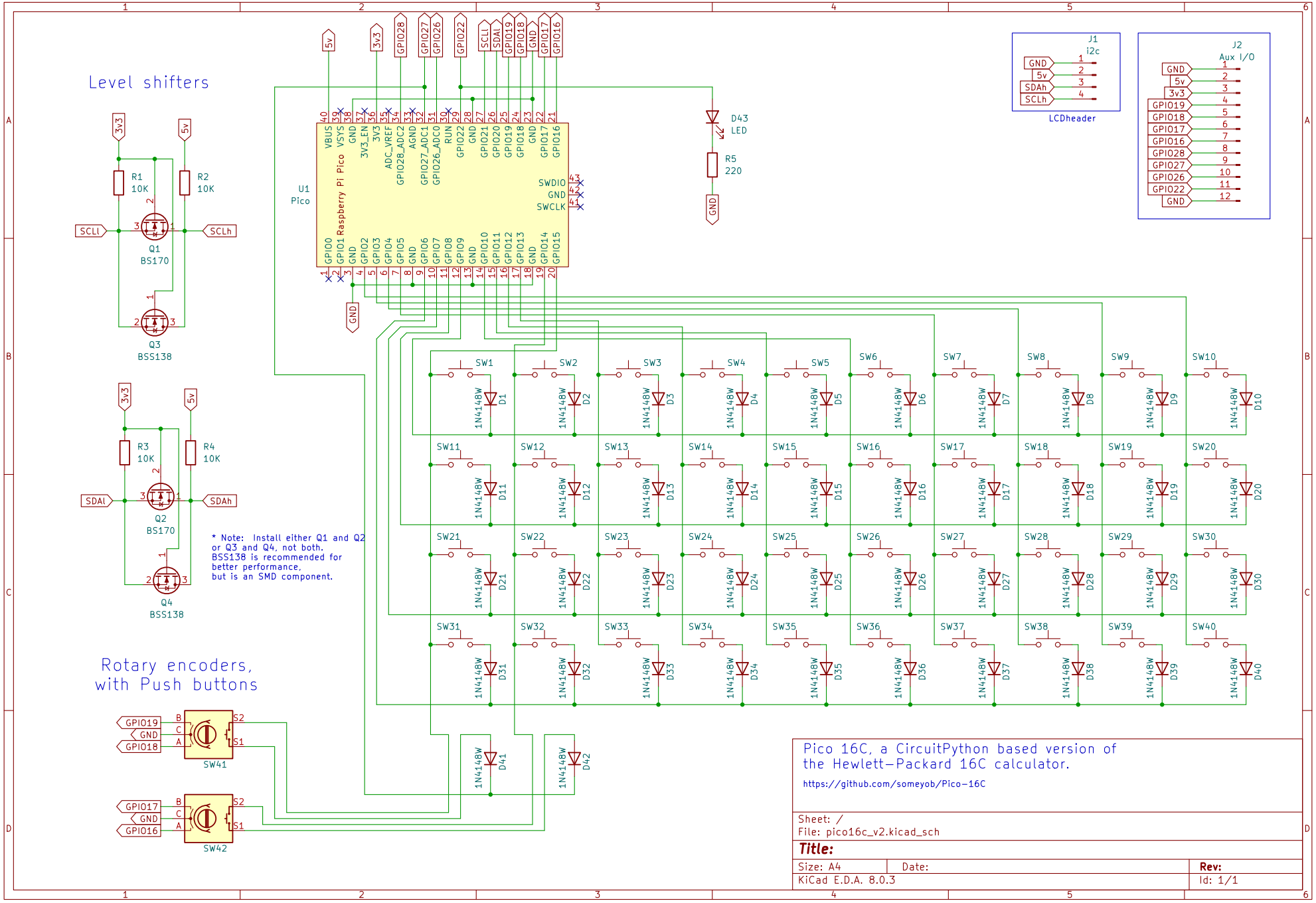
Level shifters
R1 10K
R2 10K
Q1 BS170
Q3 BSS138
R3 10K
R4 10K
Q2 BS170
Q4 BSS138
SCLl
SCLh
SDAl
SDAh
3v3
5v
* Note: Install either Q1 and Q2 or Q3 and Q4, not both. BSS138 is recommended for better performance, but is an SMD component.
Rotary encoders, with Push buttons
GPIO19
GND
GPIO18
SW41
GPIO17
GPIO16
SW42
U1 Pico
Raspberry Pi Pico
VBUS VSYS GND 3V3_EN 3V3 ADC_VREF GPIO28_ADC2 AGND GPIO27_ADC1 GPIO26_ADC0 RUN GPIO22 GND GPIO21 GPIO20 GPIO19 GPIO18 GND GPIO17 GPIO16
GPIO0 GPIO1 GND GPIO2 GPIO3 GPIO4 GPIO5 GND GPIO6 GPIO7 GPIO8 GPIO9 GND GPIO10 GPIO11 GPIO12 GPIO13 GND GPIO14 GPIO15
SWDIO GND SWCLK
GPIO28 GPIO27 GPIO26 GPIO22 SCLl SDAl GPIO19 GPIO18 GND GPIO17 GPIO16
D43 LED
R5 220
J1 i2c
GND 5v SDAh SCLh
LCDheader
J2 Aux I/O
GND 5v 3v3 GPIO19 GPIO18 GPIO17 GPIO16 GPIO28 GPIO27 GPIO26 GPIO22 GND
SW1 SW2 SW3 SW4 SW5 SW6 SW7 SW8 SW9 SW10
SW11 SW12 SW13 SW14 SW15 SW16 SW17 SW18 SW19 SW20
SW21 SW22 SW23 SW24 SW25 SW26 SW27 SW28 SW29 SW30
SW31 SW32 SW33 SW34 SW35 SW36 SW37 SW38 SW39 SW40
1N4148W D1 D2 D3 D4 D5 D6 D7 D8 D9 D10
D11 D12 D13 D14 D15 D16 D17 D18 D19 D20
D21 D22 D23 D24 D25 D26 D27 D28 D29 D30
D31 D32 D33 D34 D35 D36 D37 D38 D39 D40
D41 D42
Pico 16C, a CircuitPython based version of the Hewlett-Packard 16C calculator.
https://github.com/someyob/Pico-16C
Sheet: /
File: pico16c_v2.kicad_sch
Title:
Size: A4
Date:
Rev:
KiCad E.D.A. 8.0.3
Id: 1/1