B-2011
PIG TRAP

P-1103
PARAXYLENE SHIP LOADING PUMP

TYPE:	CENTRIFUGAL
CAPACITY:	400 m 3/h
TDH:	70 MLC
INSTALLED POWER:	120 kW
MATERIAL:	CS

B-2012
PIG TRAP

P-2001
LOADING ARM DRAIN PUMP

TYPE:	MEMBRANE
CAPACITY:	5 m 3/h
TDH:	40 MLC
INSTALLED POWER:	
MATERIAL:	CS

LA-2001
MARINE LOADING ARM

SIZE:	10"
CAPACITY:	900 m 3/h
MATERIAL:	CS

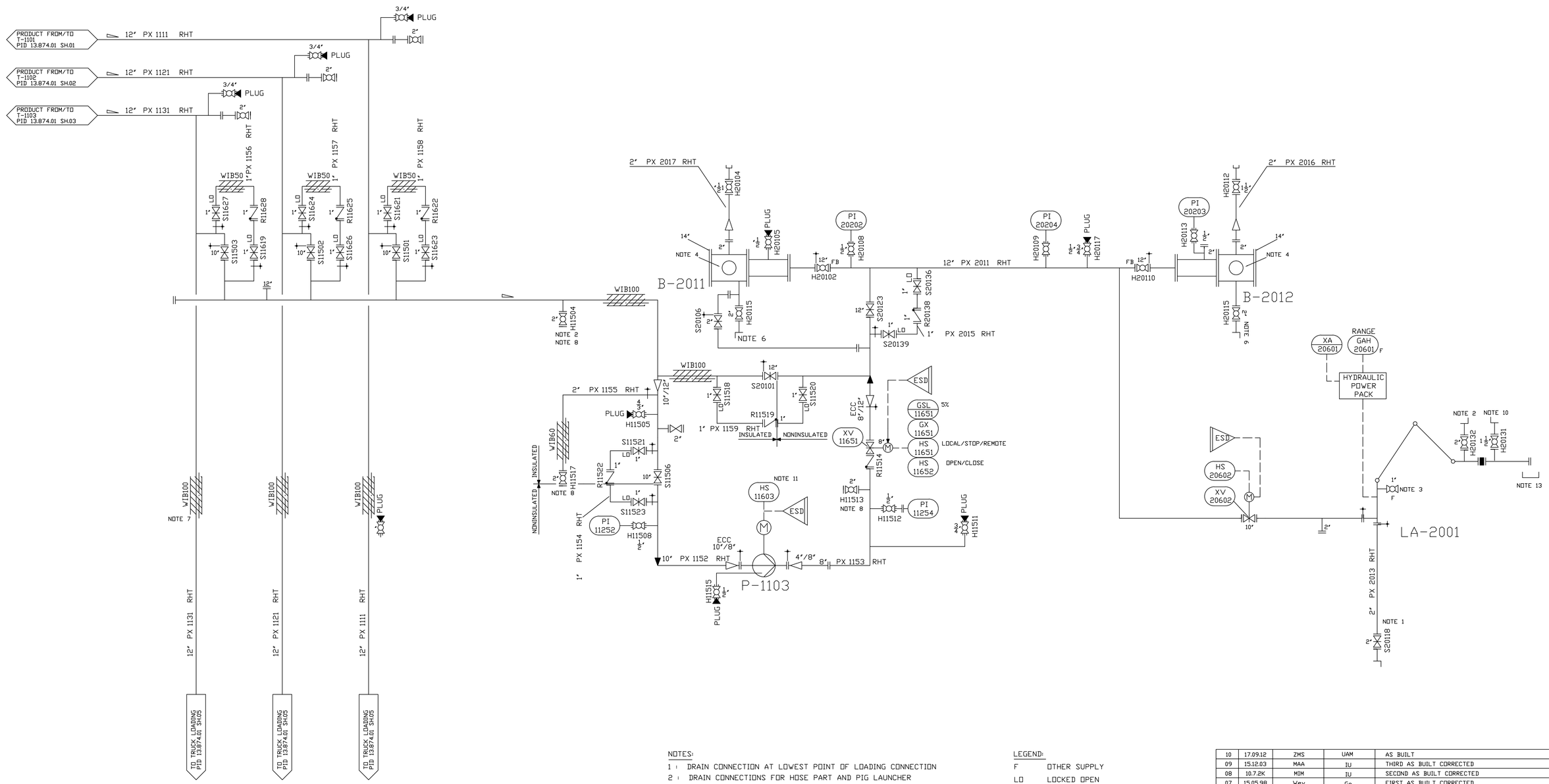

NOTES:

1 : DRAIN CONNECTION AT LOWEST POINT OF LOADING CONNECTION
2 : DRAIN CONNECTIONS FOR HOSE PART AND PIG LAUNCHER
3 : MANUAL OPERATED VALVE AT TOP OF LOADING ARM FOR EMPTYING PURPOSES (TO BE OPERATED FROM GROUND LEVEL)
4 : PIG LAUNCHER/RECEIVER TO BE EQUIPPED WITH 2 SIGHT GLASSES OPPOSITE EACH OTHER
5 : CONNECTION FOR MOBILE RECEIVING CAR KAMLOK OPW. S.S. TYPE 633-FB ADAPTOR (NPT MALE) INCL. S.S. CAP (634-B)
6 : AIR / N_2 OUTLET
7 : ALL INSULATED LINES TO BE PROVIDED WITH ELECTRICAL TRACING
8 : LOCATION OF DRAINS WILL BE FIXED DURING ERECTION
9 : CONNECTION FOR NITROGEN SUPPLY. NO FIXED CONNECTION. NITROGEN SUPPLY TO BE EQUIPPED WITH PRESSURE REDUCING SET (RANGE 1.5-10 barg) COUPLING: KAMLOK OPW. S.S. 633-FB ADAPTOR (NPT MALE) INCLUDING S.S. CAP (634-B)
10: PURGE CONNECTION: COUPLING 1 ½" KAMLOK OPW. S.S. 633-FB ADAPTOR (NPT MALE) INCL. S.S. CAP (634-B)
11: PUMP START/STOP AT PUMPHOUSE
12: PORTABLE DRIP PAN
13: PORTABLE DRIP PAN

LEGEND:

F OTHER SUPPLY
LO LOCKED OPEN

rev.	date	made	checked	description of revision
10	17.09.12	ZMS	UAM	AS BUILT
09	15.12.03	MAA	IU	THIRD AS BUILT CORRECTED
08	10.7.2K	MIM	IU	SECOND AS BUILT CORRECTED
07	15.05.98	Wey	Go	FIRST AS BUILT CORRECTED
06	09.03.98	Wey	Go	AS BUILT
05	03.09.97	Zahr	Sch	LINE No. PIG TRAPS/DRAIN FROM LA- DELETED
04	24.04.97	Zahr	Sch	GENERAL REVISION
03	06.12.96	Zahr	Sch	VENDOR INFORMATION AND COMMENTS OF CLIENT ADDED
02	08.10.96	Zahr	Sch	GENERAL REVISION+DESIGN REVIEW 04.10.96
01	23.08.96	Mn		COMMENTS ACC. TO DESIGN REVIEW 13.08.96

	date	name	sign	scale	DIN size A1
checked	17.07.12	BIK		%	sheet 04 of 05

PREUSSAG NOELL
Noell-LGA Gastechnik GmbH

INTEGRATED LIQUID CHEMICAL TERMINAL & STORAGE FARM AT PORT QASIM / PAKISTAN

project no	ident no	dok no	rev
2207	13874	01A	01

ENGRO

ENGRO PAKTANK TERMINAL LTD.

PID
PARAXYLENE SHIP (UN)LOADING

EPTL doc no	rev.
1 0 0 0 0	1 1

copyright by Noell-LGA

saved: 24.07.98

APPROVED
By Ismail at 10:05 am, Dec 17, 2014