राष्ट्रीय प्रौद्योगिकी संस्थान, रायपुर (छ.ग.)

National Institute of Technology, Raipur (C.G.)

DIGITAL EXAMINATION (End Semester) AUTUMN 2020

CBCS SCHEME / NIT SCHEME

(Tick Appropriate Scheme)

Subject Code: IT 703

Q.No.	MARKS AWARDED				
	A	B	C	D	Total
1					
2					
3					
4					
5					
Marks Obtained (TOTAL) Total (in words)					
Maximum Marks:					20

Roll No. 18118080

Roll No. (In words) One Eight One One Eight Zero Eight Zero

Enrolment No. 181087

Subject DLP

Date of Exam 16-11-2021

Course B.Tech Semester 7

Total Number of Pages in this copy 20

Student's Name Sonya Srivastava

Signature of Student: Sonya

Signature of Teacher Coordinator

Name of Teacher Coordinator

Signature of Valuer

Name of Valuer .....

Note:-

1. The student should preferably use A-4 size un-ruled paper for writing to-the-point answers to the questions in digital examination.
2. Students should take precaution to scan / capture the full page and all the pages. They should also ensure that the scanned / captured image or pdf is clearly visible and readable.
3. Students should also ensure marking the end of their last answer indicating the completion of their submission. At the end of answer sheet student should put his/her SIGNATURE along with DATE and TIME.
4. Answer should be clear and to the point and in accordance with the marks allotted to each questions. Answer copies submitted after due time will not be considered and the students will be treated as ABSENT.
5. All the pages should contain Page Number at the BOTTOM of every page in either of the given formats. For e.g.: Page 1 of 5 or 1/5. The page must be properly numbered
6. The student should write Roll Number, Name and Signature on Top Right Side on all the pages.
7. Other instruction remain same as per notice to the students from Dean Academic Office Circulated to you vide Notice No./NITRR/Dean (AA) 2020/QN-26 Date: 03-10-2020.

Scanned by CamScanner

18118080
Somya Srivastava
Somya.

1) (a) Image Processing: This is a method to convert an image to digital form and perform some opⁿ on it, in order to get an enhanced image or to extract some useful information from it.

Importance of Image Processing:

1) visualisation
2) Image sharpening and restortation
3) Image Retrieval
4) Image Recognition.
5) Measurement of Pattern.

It includes treating images as 2dimensional signals while applying already set signal processing methods to them.

Fundamental steps in Image Processing:

(1) Image Acquisition: This involves preprocessing such as scaling; This is the first and most fundamental step. It can be defined as being given an image that is already in digital form.

2) Image Enhancement: This brings out the detail that is obscured or it highlights certain feature of interest in an image. Such as changing brightness and contrast.

3) Image Restoration: This deals with improving the apperance of an image. These technique are based on mathematical or probalistic models of image degradation.

Scanned by CamScanner

18/18020
Somya

(4) Color Image Processing: This includes color modelling and processing in a digital domain.

5) Wavelets and Multi Resolution Processing: Wavelets are found for rep. images in various degree of resolution. Images subdivision into smaller regions for data compression.

6) Compression: This deals with technique for reducing storage required to save an image. It is necessary to compress the data.

7) Morphological Processing: This deals with tools for extracting image component that are useful in representation and description of shape.

8) Segmentation: It partition an image into its constituent parts or objects.

9) Representation and Description: This deals with extracting attributes that results in some quantitative info. of interest.

10) Object Recognition: This steps assign a label to an object.

(11) Knowledge Base: This involves an interrelated list of all major possible defects in a material inspection problem.

Scanned by CamScanner

1811 2080
Somyer.

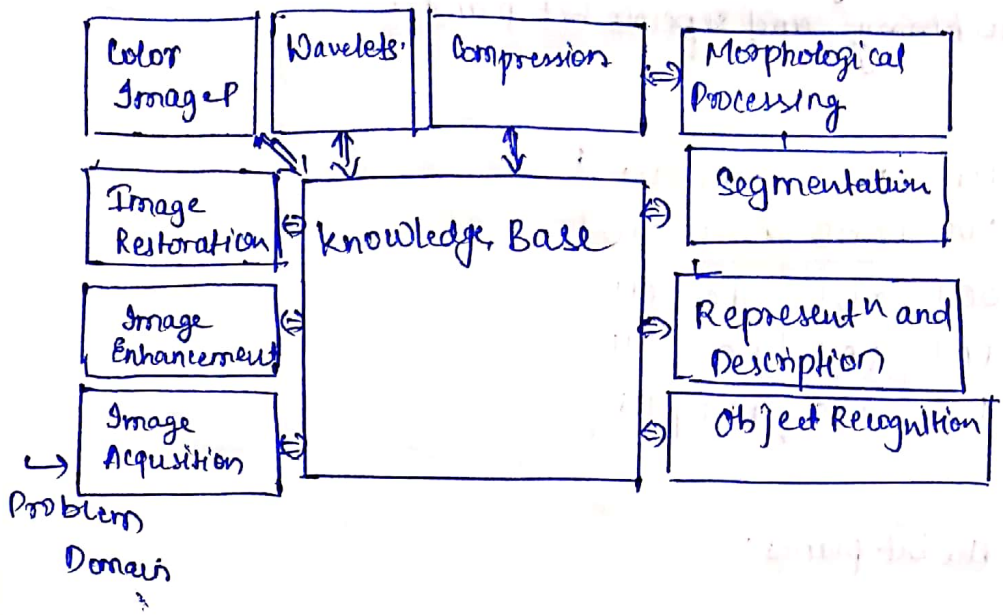

Q 1 (b) Bit-plane slicing: This is a method of representing an image with one or more bits of the byte used for each. One can use only MSB to represent the pixel, which reduces the original gray level to a binary image.

Goals of Bit Slicing:

→ Converting a gray level image to binary image.

→ Representing an image with fewer bits and corresponing this image to a smaller size.

→ Enhancinge image by focussing.

Lets understand Bit slicing in detail by taking an example.

6	7	6	6	7
0	0	0	1	2
1	1	1	2	3
4	5	5	4	2
6	6	6	7	7

Scanned by CamScanner

18112020
Somya Srivastava
Somya.

Since the given image has max. grey level of 7,
It is a 3 bit Image.
→ Convert to binary and seperate bit planes.

110	111	110	110	111
000	000	000	001	010
001	001	001	010	011
100	101	101	100	010
110	110	110	111	111

Seperating the bit planes.

1	1	1	1	1
0	0	0	0	0
0	0	0	0	0
1	1	1	1	0
1	1	1	1	1

MSB Plane.

1	1	1	1	1
0	0	0	0	1
0	0	0	1	1
0	0	0	0	1
1	1	1	1	1

Center Bit Plane

0	1	0	0	1
0	0	0	1	0
1	1	1	0	1
0	1	1	0	0
0	0	0	1	1

LSB Plane.

1.(c) Histogram Equalisation: This is a method in image processing of contrast adjustment using image's histogram.

Done in following steps:

(A) Calculate probability for every discrete grey level.

Compute $P(r_k) = \frac{n_k}{n}$,

n_k = no. of grey level.

n = Total no of pixel in image.

Scanned by CamScanner

18118080
Somya.

(2) Compute discrete version of previous transformation.

C.D.F

$$S_K = T(r_K) = (L-1) \sum_{j=0}^{K} P_{in}(r_j) \quad 0 \le K \le L-1$$

(3) Then draw histogram with new active levels

Now Question $L=8$ $M \times N = 4096$.

Step 1:

r_K	n_K	$P_r(r_K) = n_K / M.N$
0	123	0.03
1	78	0.02
2	281	0.07
3	417	0.10
4	639	0.16
5	1054	0.26
6	816	0.20
7	688	0.17

Step 2: Compute CDF

$$S_K = (L-1) \sum_{j=0}^{K} P_{in}(r_j)$$

$S_0 = (8-1) \times 0.03 = 0.21 \simeq 0$

$S_1 = T(r_1) = 0.21 + 7 \times 0.02 = 0.3 \simeq 0$

$S_2 = 0.35 + 7 \times 0.7 = 0.84 \simeq 1$

$S_3 = 0.84 + 7 \times 0.10 = 1.54 \simeq 2$

$S_4 = 1.54 + 7 \times 0.11 = 2.66 \simeq 3$

5/60

Scanned by CamScanner

18118080
Somya Srivastava
Somya.

$S_5 = 2.66 + 7 \times 0.26$

$= 4.48 \simeq 4$

$S_6 = 4.48 + 7 \times 0.20 = 5.88 \simeq 6$

$S_7 = 5.88 + 7 \times 0.17 = 7.07 \simeq 7.$

Step 8: Achieved levels are

$S_0 = 0$, $S_1 = 0$ } $P_k = 0.03 + 0.02$
$= 0.05$

$S_2 = 1$ $P_k = 0.07$

$S_3 = 2$ $P_k = 0.10$

$S_4 = 3$ $P_k = 0.16$

$S_5 = 4$ $P_k = 0.26$

$S_6 = 6$ $P_k = 0.20$

$S_7 = 7$ $P_k = 0.17$

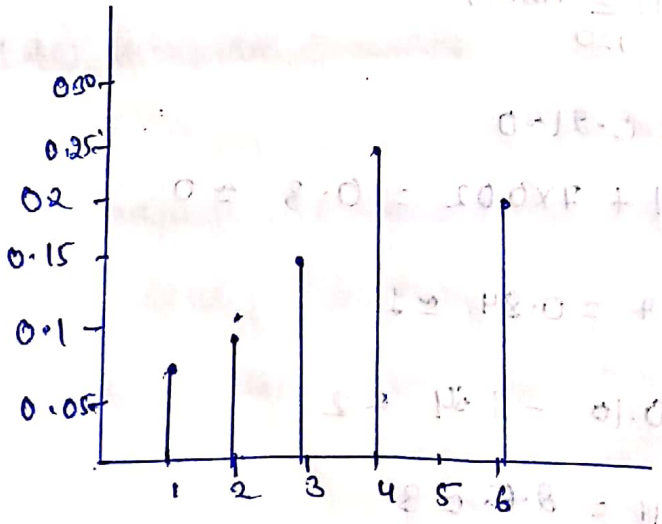

Scanned by CamScanner

18118080
Somya Srivastava
Somya.

2.(a) Gray Level Transformation.

→ All Image processing technique focused on gray level transformation as it operates directly on pixels.

→ It involves 255 levels of gray and in a histogram horizontal axis spans from 0 to 255.

→ The vertical axis depends on the no. of pixel in the Image.

The simplest formula for Image enhancement technique

$$S = T_r$$

T → Transformation
r → Value of Pixel
s → Pixel value before and after Processing.

$r = f(x, y)$
$S = S(x, y)$

There are 3 types of Transform^n:

1. Linear
2. ~~Logestic~~ logarithmic
3. Power low.

Linear Transformation

1. Identify Transform^n
2. Negative Transform^n

Logarithmic Transform^n

1. log, 2. Inverse log

Power low Transform

1. n^{th} power 2. n^{th} Root.

Scanned by CamScanner

18118080
Somya.

2(b) 2Dimensional DFT:

→ Fourier transform of 2D signal defined over a discrete finite 2D grid of size M×N.

→ Fourier transform of a 2D set of samples forming a bidemionsal sequence.

2D Fourier (DTFT).

$$F(u,v) = \sum_{m=-\infty}^{\infty} \sum_{n=-\infty}^{\infty} f[m,n]\, e^{-j2\pi(um+vn)}$$

2D Discrete Fourier Transform (DFT)

$$F[k,l] = \frac{1}{MN} \sum_{m=0}^{m-1} \sum_{n=0}^{n-1} f(m,n)\, e^{-j2\pi\left[\frac{k}{m}m + \frac{l}{N}n\right]}$$

Properties:

1) Periodicity: It has impo. consequence on the implementation and energy compaction property

$$F[u,v] = F[u+mM, v]$$
$$= F[u, v+nN].$$

2) Angle and Phase Spectra.

$$F[-u,-v] = F^*[u,v]$$
$$|F[-u,-v]| = |F[u,v]|$$
$$\phi[-u,-v] = -\phi[u,v]$$

3. Transl^n and Rot^n

$$f[r, \theta+\theta_0] \leftrightarrow F[\omega, \psi+\theta_0]$$

Scanned by CamScanner

18118080
Somya Sivastava
Somya.

4. Mean Value : $F[0,0] = \frac{1}{NM} \sum_{n=0}^{N-1} \sum_{m=0}^{M-1} F(n,m)$

2(c)

Symbol	A	B	C	D	E	F
Probability	5	9	12	13	16	45

Huffman Coding:

Symbol	Encoding	Probability	Code length
F	0	0.45	0
E	111	0.16	3
D	101	0.13	3
C	100	0.12	3
B	1101	0.09	4
A	1100	0.05	4.

$L_{avg} = (0.45) \times 0 + (0.16) \times 3 + (0.13) \times 3 + (0.12) \times 3 + (0.09) \times 4 + (0.05) \times 4$

$= 0.48 + 0.39 + 0.39 + 0.36 + 0.2$

$= 1.79$ bits / symbol.

Entropy $= -\sum p_i \log(p_i)$

$= -[0.05 \log(0.05) + 0.09 \log(0.09) + 0.12 \log(0.12) + 0.13 \log(0.13) + 0.16 \log(0.16) + 0.45 \log(0.45)$

$= 0.668$ bits / pixel.

Scanned by CamScanner

Efficiency $= \eta = \frac{\text{Entropy}(H)}{L(L_{avg})} = \frac{0.668}{1.79} = 0.37$

Compression Ratio $(R) = \frac{3}{1.79} = 1.6759$

Redundancy $(R_p) = 1 - \frac{1}{1.6726}$

$= 1 - 0.596$

$= 0.404.$

Scanned by CamScanner

18118080
Sonya Srivastava
Sonya.

3(a) Image Smoothening: This is often used to reduce noise within an image enhancement which can remove noise in images, so it is necessary func" module in various software. This helps to improve the quality ~~noise~~ image.

Properties of Gaussian filter:

1) A Gaussian filter smoothers an image by calculating weighted average in filter box.
2) It is used to blur images and remove details and noise.
3) Give more weight at center pixels and less weights to neighbors.
4) The farther away neighbor the smaller the weight.
5) Gaussian Blurs produce a very pure smoothening effect without side effect

$$\frac{1}{2\pi\sigma^2} \exp\left\{-\frac{x^2+y^2}{2\sigma^2}\right\}.$$

(b) Total no. of symbols in the word COMMITTEE is 9.

$$\text{Probability} = \frac{\text{Total no. of ocurence of symbol}}{\text{Total No. of symbols in the message}}.$$

Step 1:

Symbol	M	T	E	C	O	I
Proba.	2/9	2/9	2/9	1/9	1/9	1/9

Step 2: Construction of Huffman Tree.

11/20

Scanned by CamScanner

18118000
Sonya

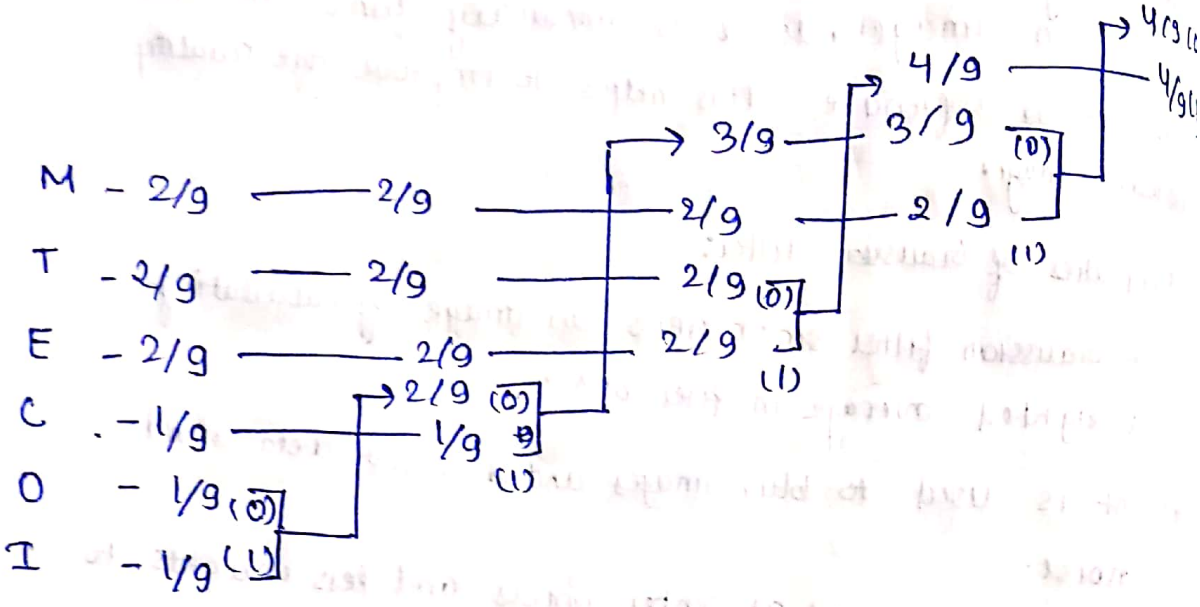

Codeword for Huffman tree

Symbol	M	T	E	C	O	I
Probability	2/9	2/9	2/9	1/9	1/9	1/9
Codeword	01	10	11	001	0000	0001
Word Length	2	2	2	3	4	4

$$\text{Entropy} = H(S) = -\sum_{k=0}^{n-1} P_k \log_2 P_k$$

$$= -(1/0.3010) \sum_{k=0}^{n-1} P_k \log_{10} \frac{1}{P_k}$$

Avg. Length

$$I = \sum_{k=0}^{n-1} P_k l_k = (2/9)\times 2 + (2/9)\times 2 + (2/9)\times 2$$

$$+ (1/9)\times 3 + (1/9)\times 4 + (1/9)\times 4$$

$$= 2.5535 \text{ bits / symbol.}$$

12/0

Scanned by CamScanner

18118020
Somya Div.
Roll no.

Determination of entropy

$$H(S) = -(1/0.3010)(2/9)\log(2/9) + 2/9 \log 2/9$$

$$+ 2/9 \log 2/9 + 3 \times 2/9 \log 1/9$$

$$= 2.5034 \text{ bits/symbol}$$

$$\text{Efficiency} = \frac{2.5034}{2.5535} = 0.9797$$

$$= 97.97\%$$

3(c) $P(A) = 0.6$ $P(B) = 0.3$ $P(C) = 0.1$

String = BCAB.

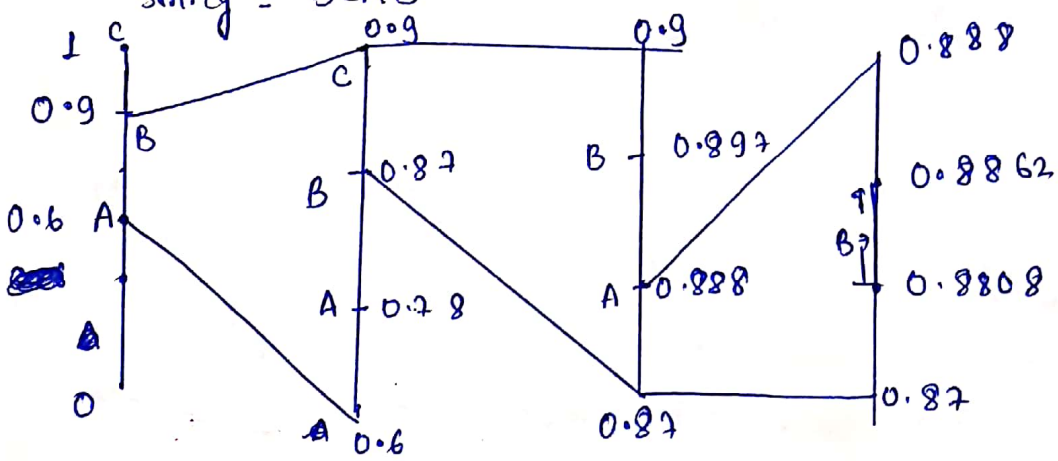

Ist $d = 0.9 - 0.6 = 0.3$

for A $= 0.6 + (0.3)(0.6) = 0.78$

for B $= 0.78 + (0.3)(0.3) = 0.87$

for C $= 0.87 + (0.3)(0.1) = 0.9$

IInd $d = 0.9 - 0.87 = 0.03$.

For A $= 0.87 + 0.03(0.6) = 0.888$

for B $0.888 + (0.3)(0.03) = 0.897$

Scanned by CamScanner

181180050
Somya

for C) $0.897 + (0.03)(0.1) = 0.9$

~~for~~ II : $d = 0.018$

for A : $0.87 + (0.018)(0.6)$

$= 0.8808$

for B = $0.8808 + (0.018)(0.3)$

$= 0.8862$

for C = $0.8862 + (0.018)(0.1)$

$= 0.888.$

The interval is 0.8808 to 0.8862.

Scanned by CamScanner

18118080
Somya Srivastava
Somya

4.(a) Types of Redundancy: There are 3 basic Redundancies.

1. Coding Redundancy:
   A. Associated with representation of information.
   B. Info related in form of codes.

2. Inter pixel spatial redundancy
   A. due to correlation b/w neighbouring pixels in an image.
   B. neighbouring pixels are not statiscally independent.

3. Pschyovisual redundancy:
   A. These exist because human perception does not involve quantitative analysis of every pixel.
   B. It's elimination is real visual info. is possible.

4.(b). Shannon source Coding Theorm

This theorm tells about if we wish to communicate sample drawn from some distribution, then average we will require at least as many symbols as the entropy of that distribution communicate these sample

Shamon Capacity is

$$C = B\log\left(1+\frac{S}{nB}\right)$$

channel coding theorm: find codes which transmit quickly count many valid code words.

15/20

Scanned by CamScanner

and can correct or atleast detect many error while not mentally exclusives performance in these areas in a trade off.

Proof:

For error free Transform^n:

$$S_n(f) = \begin{cases} n/2 & -B \le f \le B \\ 0 & \text{else} \end{cases}$$

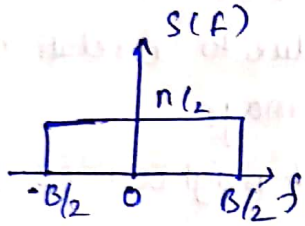

$$\text{Noise} = \int_{-\infty}^{\infty} S_n(f)\,df$$

$$= \int_{-B}^{B} n/2 \, df$$

$N = nB$ → noise power as $BT \to nT$

So channel capacity:

$$C = B\log_2\left(1 + \frac{S}{nB}\right).$$

4(c) Bit plane coding for following matrix:

Step 1:

180	4	80	33	201
120	24	11	160	28
224	1	113	67	144.

Step 2:

10110100	00000100	01010000	00100001	11001
01111000	00011011	00001011	10100000	00011
11100000	00000001	10000101	01000011	10010

Scanned by CamScanner

18118080
Somya Siva Sai

Step 3. Reshape the Matrix to size of original matrix A

1	0	0	0	1
0	0	0	1	0
1	0	1	0	1

Step 4: Preallocate matrix of same size of original matrix ~~of~~ A and replace the MSB of each value in the matrix with the bit we decomposed in previous step.

128	0	0	0	128
0	0	0	128	0
128	0	128	0	128

17/20

Scanned by CamScanner

5. a) Discontinuity : Here the partition or sub-division of an image is based on some abrupt changes in the intensity a level of images.

There are 3 types of discontinuity:

1. Point
2. Line
3. Edge

Point detection : detect an isolated point

& line detection : If each mask is moved around an image it would respond more strongly to lines.

Edge Detection : The magnitude of first derivative can be used to detect an edge.

5. (b) Thresholding : It is a segmentation technique used for seperating an object from its background. The process of thresholding involves comparing each value of image to specified threshold.

Types :

(1) Binary Threshold (int type = 0).

The group having members with pixel intensity greater that the set threshold are assigned 'Max-value' or in case of greyscale a value of 255 (white).

18/20

Scanned by CamScanner

18118080
Somyet.

(2) Inverted Binary Threshold (int type=1).
Pixels having intensity less than threshold are set to "max value".

(3) Truncate (int type=2)
The group having pixel intensities greater than set threshold is truncated to the set threshold or other words, the pixel values are set to be same as set threshold.

(4) Threshold to zero (int type=3)
We set the pixel intensity to '0' for all pixels of the group having intensity values less than threshold.

5(c) Erosion: The opn is compliment of dilation. It causes object to lose its size. The erosion image A by structuring element B.

$$A \ominus B = \{z \mid (B)_z \subseteq A\}$$

Dilation: The opn makes an object to grow by size. The extent to which it grow depend on the nature and shape of structuring element.

Defined as: $A \oplus B = \{z \mid (\hat{B})_z \cap A \neq \phi\}$.

$$A \begin{bmatrix} 11 & 18 & 13 & 12 \\ 12 & 2 & 22 & 22 \\ 22 & 22 & 22 & 2 \\ 1 & 68 & 70 & 6 \end{bmatrix} \qquad \begin{bmatrix} 1 & 1 & 1 \\ 1 & 1 & 1 \\ 1 & 1 & 1 \end{bmatrix}$$

Scanned by CamScanner

5.

Erosion : Hold center element ~~and~~.

$$A \Rightarrow \begin{bmatrix} 0 & 0 & 0 & 0 \\ 0 & 20 & 22 & 0 \\ 0 & 22 & 22 & 0 \\ 0 & 0 & 0 & 0 \end{bmatrix}$$

$$A \ominus B = \{ z \mid (B)_z \subseteq A \}$$

dilation $A \oplus B$

$$A \rightarrow \begin{bmatrix} 11 & 18 & 13 & 12 \\ 12 & 2 & 22 & 22 \\ 22 & 22 & 22 & 2 \\ 1 & 68 & 70 & 6 \end{bmatrix}$$

5.

— The End —

Somya Srivastava

181180020

20/20

Scanned by CamScanner