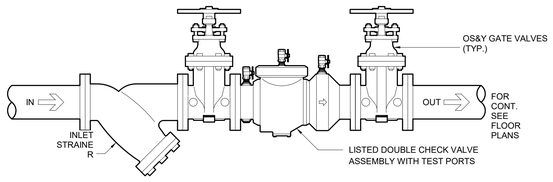

NOTES:

1. UNLESS OTHERWISE NOTED MOUNTING HEIGHT SHALL BE BETWEEN 42" ABOVE THE FINISHED FLOOR AND 12" CLEAR AROUND ALL SIDES

1 DOUBLE CHECK VALVE ASSEMBLY DETAIL

SCALE: NOT TO SCALE

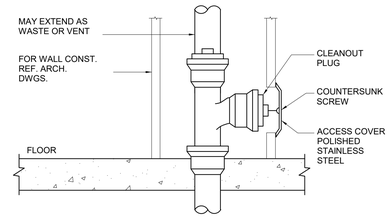

5 WALL CLEANOUT DETAIL

SCALE: NOT TO SCALE

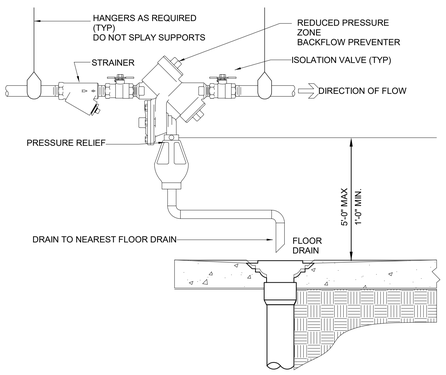

2 TYPICAL BFP (UNDER 2 INCH DIAMETER) INSTALLATION DETAIL

SCALE: NOT TO SCALE

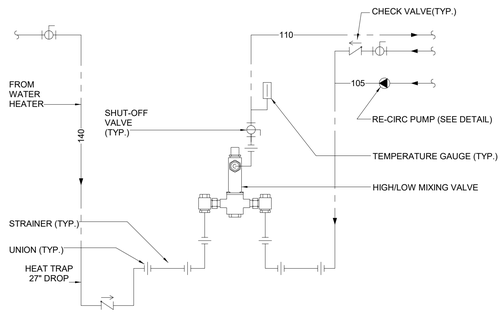

NOTE:
FOR PIPE SIZES SEE SCHEDULE AND/OR RISER DIAGRAM (TYPICAL)

6 THERMOSTATIC MIXING VALVE PIPING DETAIL

SCALE: NOT TO SCALE

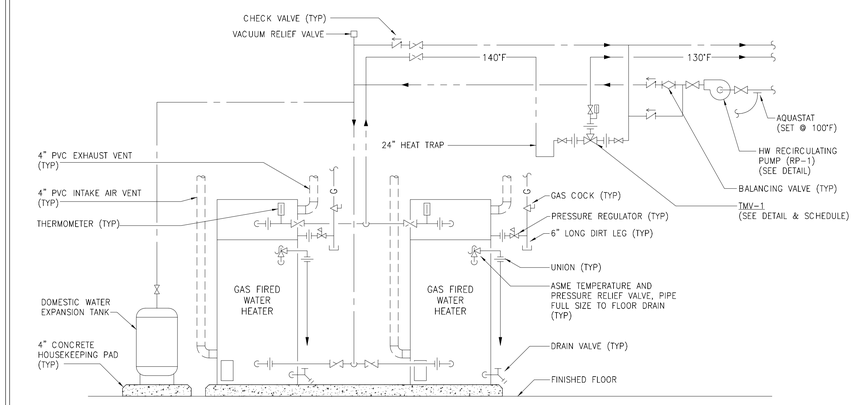

NOTES:

1. INSTALL PER MANUFACTURER'S RECOMMENDATIONS.
2. ALL CHECK VALVES, MULTI-PURPOSE VALVES TO BE INSTALLED IN THE HORIZONTAL POSITION ONLY.
3. IN-LINE RE-CIRC. PUMPS SHALL BE INSTALLED AT 66" AFF.
4. MAINTAIN CLEARANCES TO COMBUSTIBLES AS REQUIRED BY WATER HEATER MANUFACTURER.
5. ALL PUMPS MUST BE BALANCED TO SCHEDULED FLOW RATES.
6. VENT AND COMBUSTION AIR TERMINATIONS MUST BE SEPARATED PER NFPA-54 AND MANUFACTURER'S RECOMMENDATIONS.
7. MANIFOLD WATER HEATERS PER MANUFACTURER'S RECOMMENDATIONS TO MAINTAIN A HYDRAULICALLY BALANCED SYSTEM.

8 DUPLEX GAS FIRED WATER HEATER DETAIL

SCALE: NOT TO SCALE

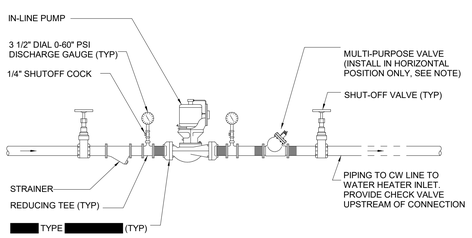

NOTES:

1. [redacted] IN [redacted] LINE FOR PUMP [redacted]
2. [redacted] RE-CIRC. [redacted] ON PUMP [redacted] IS LESS THAN 1-1/2", [redacted] VALVE, SHUT-OFF VALVE, AND [redacted] VALVE IN LIEU OF MULTI-PURPOSE VALVE.

3 IN-LINE [redacted] PUMP DETAIL

SCALE: NOT TO SCALE

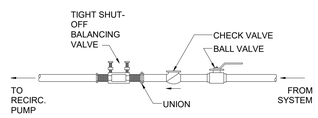

NOTES:

1. INSURE PROPER ACCESS IS PROVIDED TO VALVE AND THAT VALVE CAN BE METERED. DO NOT [redacted] TAPS DOWNWARD.
2. [redacted] IN HARD CEILING LOCATIONS.
3. [redacted] TEE [redacted] ACCESS.

7 HOT WATER [redacted] VALVE DETAIL

SCALE: NOT TO SCALE

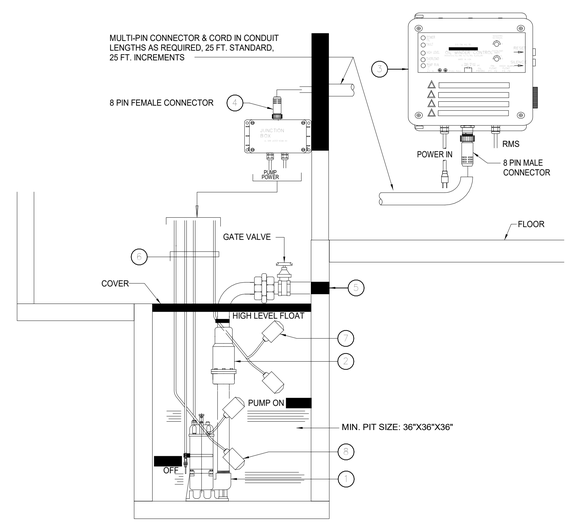

[redacted] NOTES:

1. SP-1 [redacted] SE-100 [redacted] PUMP 1 HP, 460 VOLT, 3600 RPM, 2" [redacted]
2. [redacted] VALVE
3. [redacted] OIL [redacted] 460V, 1Ø CONTROL [redacted] WITH [redacted] IN [redacted] AND [redacted] WHEN PUMP DOES NOT RUN DUE TO OIL IN PIT OR HIGH [redacted] ALARM. [redacted] FOR [redacted] INTO PANEL. [redacted] HAVE [redacted] FOR A [redacted] LOCATION. [redacted] BOX WILL BE [redacted] WITH MULTI-PIN [redacted] & CORD IN [redacted] AS REQUIRED, 25 FT. IS STANDARD, [redacted] 25 FT. ARE REQUIRED. [redacted] FOR OIL SPILL, POWER, HIGH [redacted] LEVEL, [redacted] & PUMP RUN
4. [redacted] BOX WILL BE [redacted] WITH MULTI-PIN [redacted] AND CORD IN [redacted] AS REQUIRED; 25 FT. IS STANDARD, [redacted] 25 FT. [redacted]
5. ALL [redacted] PUMP [redacted] BE [redacted] WITH [redacted] CT [redacted] TAPE
6. OIL [redacted] CABLE, [redacted] CABLE, [redacted] CABLE, HIGH [redacted] & PUMP ON [redacted] CABLE.
7. HIGH [redacted] WITH [redacted] TO [redacted] TO PUMP [redacted] PIPING.
8. PUMP ON FLOAT.

9 [redacted] SUMP PUMP DETAIL

SCALE: NOT TO SCALE

[redacted] LIST		
SYM	QTY	PART
1	2	PUMP, [redacted] 3U OR [redacted] SH
2	1	CAP, GROOVED, 304SS, 4"
3	2	VALVE, CHECK, [redacted] 871W, 2-1/2"
4	4	VALVE, BUTTERFLY, [redacted] L-ZH-L, 2-1/2"
5	1	[redacted] STAND, TRIPLEX, PS004
6	2	VFD (NOT SHOWN)
7	1	CONTROLLER, [redacted] MARK V, [redacted]

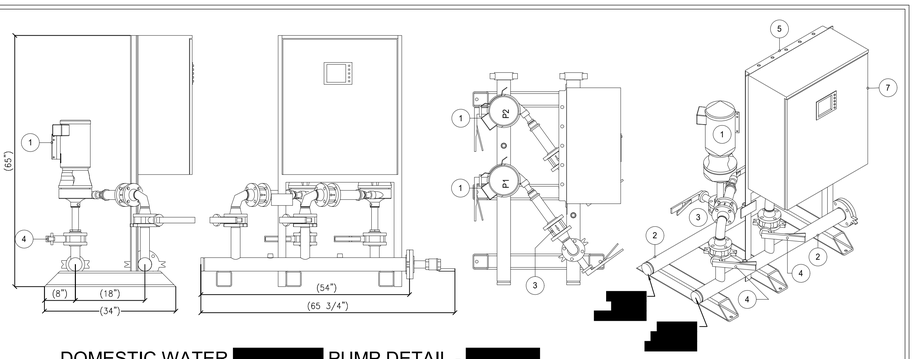

4 DOMESTIC WATER [redacted] PUMP DETAIL - [redacted]

SCALE: NOT TO SCALE

REVISION	DESCRIPTION	BY	DATE

MEP. ENG.

NIST

FOR [redacted] USE ONLY

U.S. [redacted] OF [redacted]

[redacted] OF [redacted] & [redacted]

NIST – [redacted]

[redacted] DETAILS

P302

[redacted]