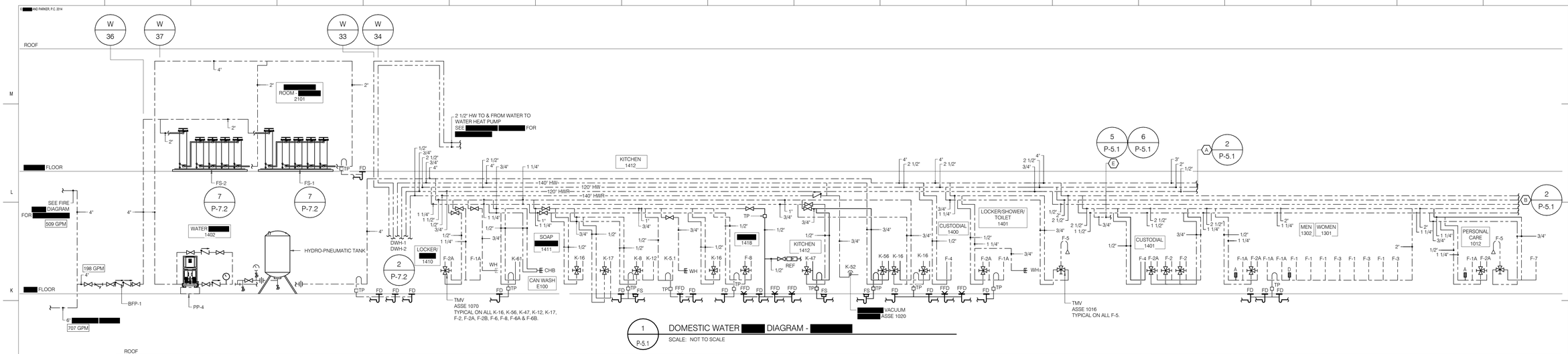

1 P-5.1 DOMESTIC WATER [redacted] DIAGRAM - [redacted]

SCALE: NOT TO SCALE

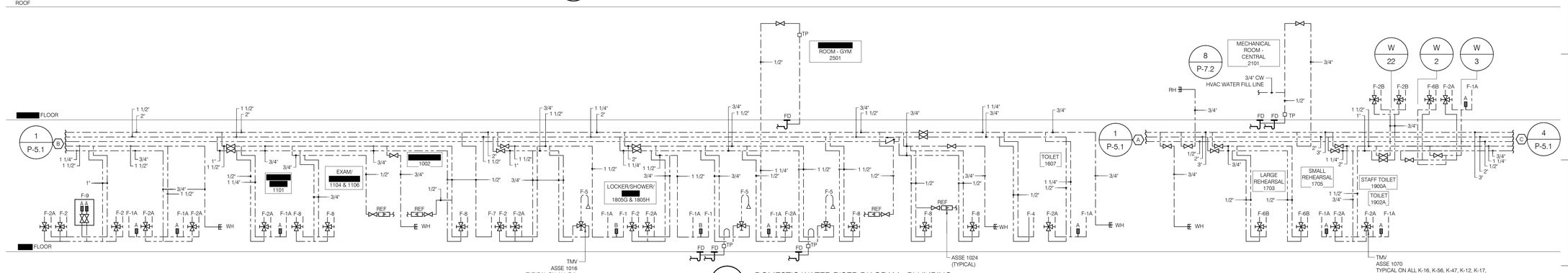

2 P-5.1 DOMESTIC WATER RISER DIAGRAM - PLUMBING

SCALE: NOT TO SCALE

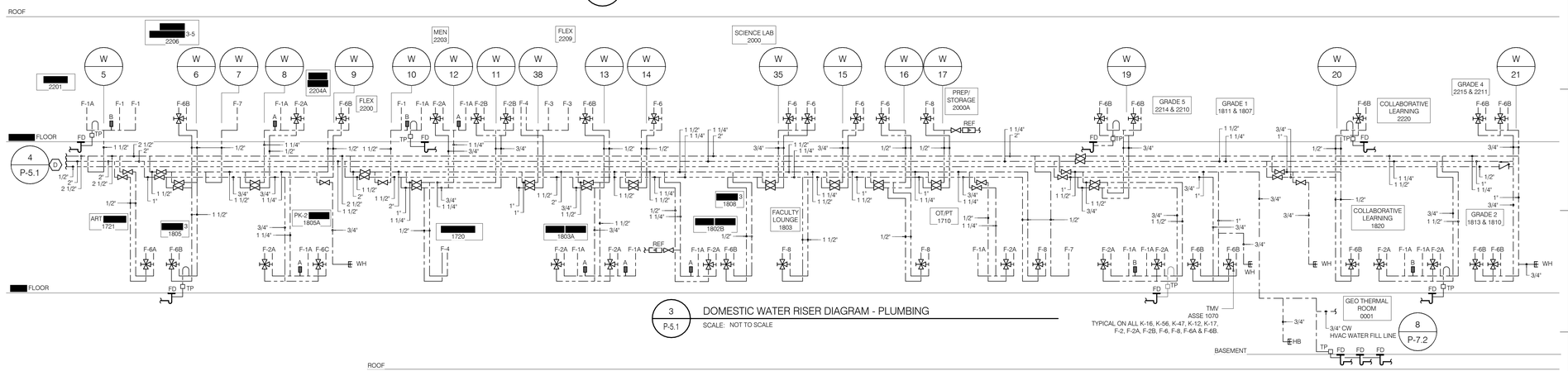

3 P-5.1 DOMESTIC WATER RISER DIAGRAM - PLUMBING

SCALE: NOT TO SCALE

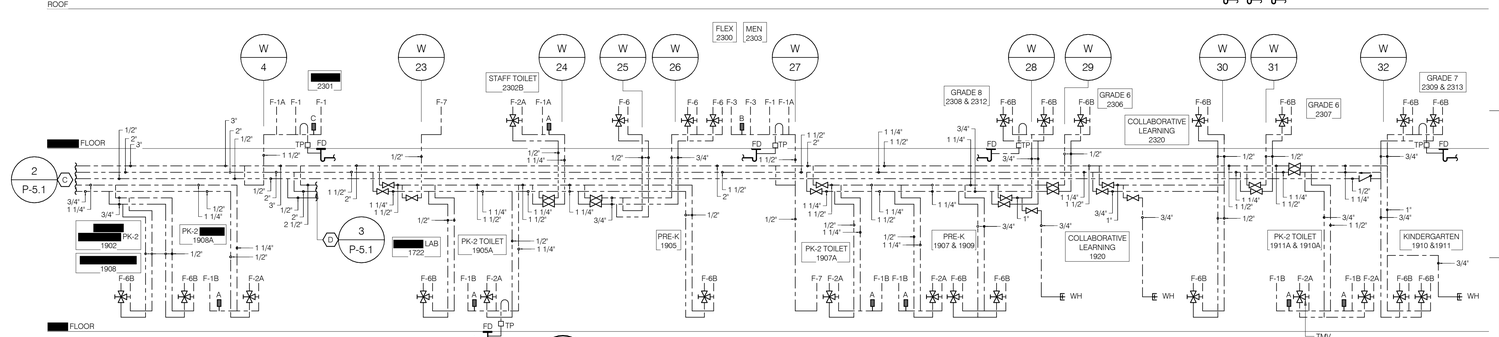

4 P-5.1 DOMESTIC WATER RISER DIAGRAM - PLUMBING

SCALE: NOT TO SCALE

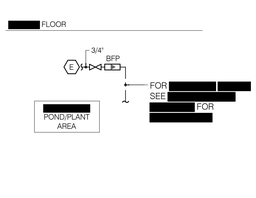

6 P-5.1 [redacted] DOMESTIC WATER [redacted] DIAGRAM - [redacted]

SCALE: NOT TO SCALE

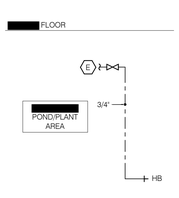

5 P-5.1 [redacted] DOMESTIC WATER [redacted] DIAGRAM - [redacted]

SCALE: NOT TO SCALE

SETTY
ONE SOUTH STREET, SUITE 1110
BALTIMORE, MARYLAND 21202
TEL 667-329-5035
WATER FOUNTAIN SERVICE • PEST MANAGEMENT
PARKING MANAGEMENT SERVICES • CROSS BORE SERVICES
CONSULTING • DESIGN • CONSTRUCTION • MAINTENANCE
DISTRICT OF COLUMBIA • MARYLAND
www.SETTY.com

PROJECT NUMBER: SA2015-17 # # # #

11720 Beltsville Drive
Suite 600
Calverton, MD 20705
Tel: 301.595.1000
www.grimmandparker.com
GRIMM AND PARKER

GP# 21553

PLUMBING DOMESTIC WATER RISER DIAGRAM

HOLABIRD ACADEMY PK-8
CITY OF BALTIMORE, MARYLAND

DATE	DESCRIPTION

P-5.1

03/13/2017
BID SET

© GRIMM AND PARKER, P.C. 2014