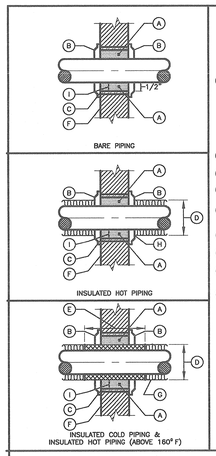

(A) PACK ALL SPACES FULL DEPTH W/MINERAL WOOL OR OTHER EQUALLY APPROVED FIRE RESISTIVE MATERIAL. (ASBESTOS OR FIBERGLASS SHALL NOT BE USED)

FIRE RESISTANT FOAM SEALANT CHASE FOAM CTC P2-655(N.Y.C. MEA 58-79 M1 & 11) MAY BE USED. INSTALLATION AS PER MANUFACTURER.

(B) ESCUTCHEON BOTH SIDES.

(C) SLEEVE

(D) INSULATION (OUTSIDE DIAMETER)

(E) ANHYDROUS CALCIUM SILICATE INSULATION THRU SLEEVE.

(F) FIRE RATED PARTITION, WALL OR FLOOR.

(G) FIBERGLASS INSULATION

(H) TERMINATE INSULATION AT ESCUTCHEON

(I) MAXIMUM 1/2" CLEARANCE BETWEEN INSIDE OF SLEEVE & PIPE.

DETAIL OF PIPING PIERCING FIRE RATED PARTITIONS, WALLS & FLOORS.

NOT TO SCALE

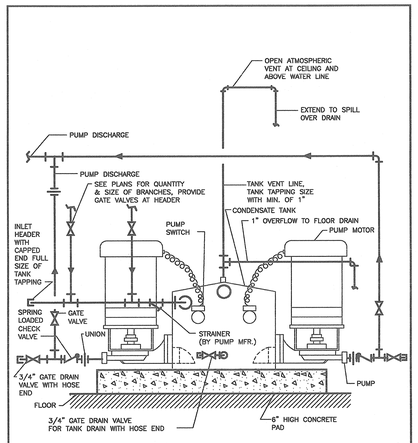

CONDENSATE PUMP PIPING

NOT TO SCALE

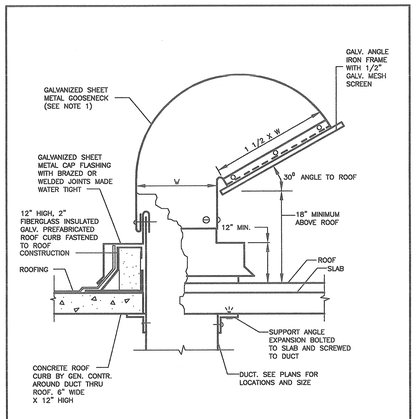

NOTES:
ALL JOINTS SHALL BE PAINTED WITH ZINC CHROMATE, INCLUDING BRAZED/WELDED JOINTS OR RAW ENDS OF DUCT WORK OR ANGLES. BY SHEET METAL FABRICATOR.

GOOSENECK

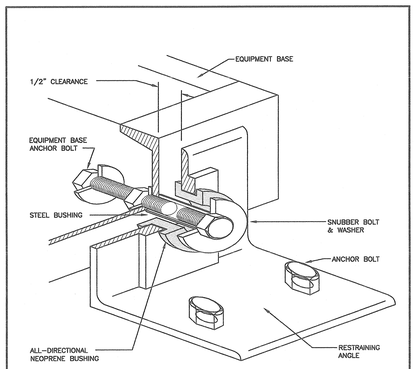

NOTES:
1. EARTHQUAKE RESTRAINING ANGLES ARE TO BE INSTALLED AFTER EQUIPMENT IS IN OPERATION TO ASSURE DESIGN CLEARANCES ARE MAINTAINED.
2. SNUBBER TO BE MANUFACTUED WITH AN AIR GAP BETWEEN HARD AND RESILIENT MATERIAL OF NOT LESS THAN 3 (1/8") NOR MORE THAN 6.5 (1/4").
3. THE CAPACITY OF THE SEISMIC SNUBBER AT 10 (3/8") DEFLECTION SHALL BE 3 TO 4 TIMES THE LOAD ASSIGNED TO THE MOUNT GROUPING.

ALL-DIRECTIONAL SEISMIC SNUBBER

NOT TO SCALE

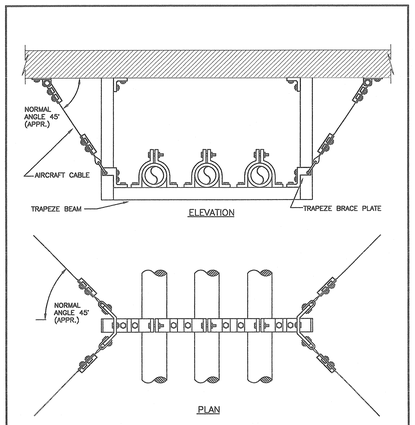

NOTES:
1. SPACING OF SEISMIC RESTRAINTS ARE NOT TO EXCEED 40'-0".

SEISMIC RESTRAINT FOR SUSPENDED PIPE TRAY

NOT TO SCALE

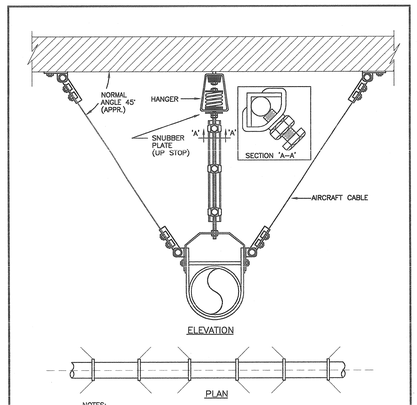

NOTES:
1. PIPING TO BE RESTRAINED AS PER 1987 BOCA CODE.
2. SEISMIC RESTRAINT CABLES TO BE AT 45° ANGLES TO PIPE AXIS AND TO CEILING ALTERNATING CABLE DIRECTION TO PROVIDE AXIAL, LATERAL & DOWNWARD RESTRAINT.
3. SEISMIC RESTRAINT IS NOT REQUIRED IF TOP OF PIPE IS 12" OR LESS FROM BOTTOM OF STRUCTURAL SUPPORT POINTS.

SEISMIC RESTRAINT FOR SUSPENDED PIPE

NOT TO SCALE

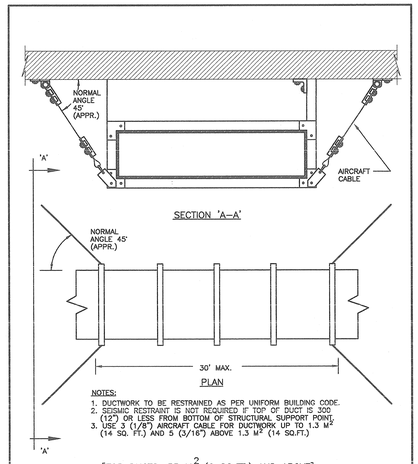

NOTES:
1. DUCTWORK TO BE RESTRAINED AS PER UNIFORM BUILDING CODE.
2. SEISMIC RESTRAINT IS NOT REQUIRED IF TOP OF DUCT IS 300 (12") OR LESS FROM BOTTOM OF STRUCTURAL SUPPORT POINT.
3. USE 3 (1/8") AIRCRAFT CABLE FOR DUCTWORK UP TO 1.3 M^2 (14 SQ. FT.) AND 5 (3/16") ABOVE 1.3 M^2 (14 SQ.FT.)

[FOR DUCTS .55 M^2 (6 SQ.FT.) AND ABOVE]

SEISMIC RESTRAINT TYPE III FOR RECTANGULAR DUCTWORK

NOT TO SCALE

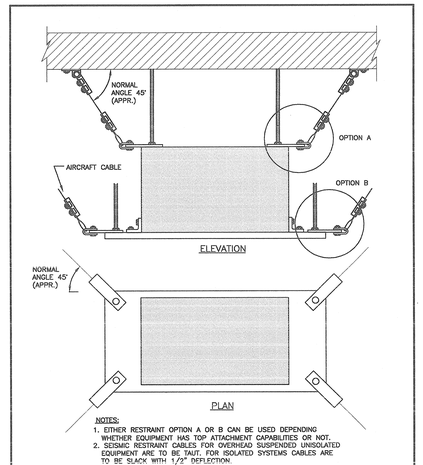

NOTES:
1. EITHER RESTRAINT OPTION A OR B CAN BE USED DEPENDING WHETHER EQUIPMENT HAS TOP ATTACHMENT CAPABILITIES OR NOT.
2. SEISMIC RESTRAINT CABLES FOR OVERHEAD SUSPENDED UNISOLATED EQUIPMENT ARE TO BE TAUT. FOR ISOLATED SYSTEMS CABLES ARE TO BE SLACK WITH 1/2" DEFLECTION.

SEISMIC RESTRAINT FOR SUSPENDED EQUIPMENT

NOT TO SCALE

VALENTINE A. LEHR CERTIFICATE No.17058 STATE OF FLORIDA REGISTERED

M.E. RINKER, SR. SCHOOL OF BUILDING CONSTRUCTION

M.E. RINKER, Sr. HALL
SCHOOL OF BUILDING CONSTRUCTION

UNIVERSITY OF FLORIDA-GAINESVILLE
PROJECT NO. BR-191

ARCHITECTS
CROXTON COLLABORATIVE/
GOULD EVANS ASSOCIATES

CROXTON COLLABORATIVE ARCHITECTS
475 FIFTH AVENUE
NEW YORK, NY 10017
TEL 212.683.1998
FAX 212.683.2799

GOULD EVANS ASSOCIATES
5405 WEST CYPRESS STREET
TAMPA, FL 33607
TEL 813.288.0729
FAX 813.288.0231

MECHANICAL ENGINEERS
LEHR ASSOCIATES
130 WEST 30TH STREET
NEW YORK, NY 10001-4092
TEL 212.947.8050
FAX 212.967.2059

STRUCTURAL ENGINEERS
WALTER P. MOORE
201 EAST KENNEDY BOULEVARD
TAMPA, FL 33602
TEL 813.221.2424
FAX 813.221.2289

CIVIL ENGINEERS
BROWN & CULLEN, INC.
3530 NW 43 STREET
GAINESVILLE, FL 32605
TEL 352.375.8999
FAX 352.375.0833

LANDSCAPE ENGINEERS
McCLAIN DESIGN GROUP, INC.
1843 NW 39 DRIVE
GAINESVILLE, FL 32605
TEL 352.372.2808
FAX 352.372.6622

CONSULTANT
SEEGY-BISCH
AUSSERE SULZBACHER STR. 118
NURNBERG, GERMANY
TEL 0911/59 90 99
FAX 0911/59 98 05

THIS DRAWING, AS AN INSTRUMENT OF SERVICE, IS AND SHALL REMAIN, PROPERTY OF CROXTON COLLABORATIVE ARCHITECTS. THIS DRAWING SHALL NOT BE REPRODUCED, PUBLISHED, USED ON OTHER PROJECTS, USED FOR ADDITIONS, OR USED IN COMPLETION OF THIS PROJECT BY OTHERS EXCEPT BY AGREEMENT IN WRITING. © 2001 CROXTON COLLABORATIVE ARCHITECTS/ GOULD EVANS ASSOCIATES.

NO.	ISSUE/REVISION	DATE

100% CONSTRUCTION DOCUMENTS

DRAWING NAME
MECHANICAL DETAILS II

DATE 11.21.01
SCALE NTS
DRAWN BY/CHECKED BY MO/MP
DRAWING NUMBER M-8

G:\4440\MECH\4440M-8.dwg Nov 16, 2001 - 15:26:45 mopolinska