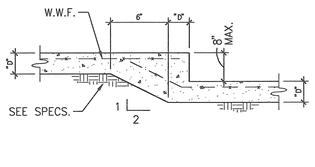


SLAB DEPRESSION

5 N.T.S. TYPICAL DETAIL

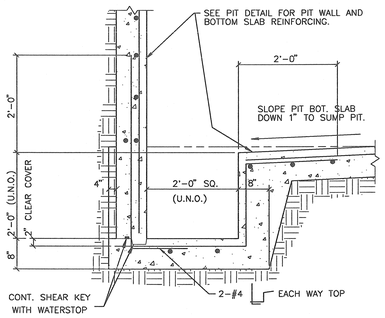


NOTE:
1. SEE PLAN FOR LOCATION AND SIZE WHERE DIFFERENT FROM DIMENSIONS SHOWN IN THIS DETAIL.

ELEVATOR SUMP PIT

4 N.T.S. TYPICAL DETAIL

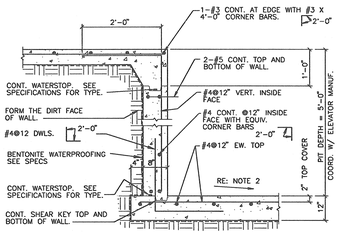


NOTES:
1. BRACE WALL AS REQUIRED UNTIL UPPER SLAB IS POURED AND HAS REACHED 2500 PSI MINIMUM.
2. SEE PLAN FOR SUMP PIT, WHERE REQUIRED. SLOPE PIT BOTTOM SLAB 1" TO SUMP PIT.
3. SEE OTHER DETAILS FOR ELEVATOR SILL DETAIL.
4. GENERAL CONTRACTOR TO COORDINATE ELEVATOR PIT SIZE, DEPTH, SILL DETAIL, AND BLOCKOUT REQUIREMENTS WITH ELEVATOR MFR'S APPROVED SHOP DRAWINGS.
5. WHERE ELEVATOR PIT SLAB IS BLOCKED OUT TO ALLOW FOR PLACEMENT OF HYDRAULIC ELEVATOR JACK, FILL BLOCKOUT WITH CONCRETE AFTER JACK IS SET.

ELEVATOR PIT

3 N.T.S. TYPICAL DETAIL

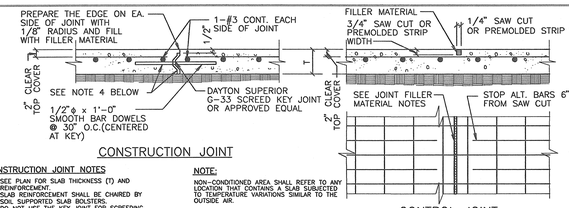


CONSTRUCTION JOINT

CONTROL JOINT

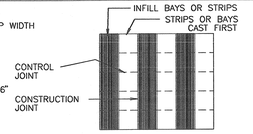


LONG STRIP CONSTRUCTION SCHEMATIC LAYOUT

CONSTRUCTION JOINT NOTES
1. SEE PLAN FOR SLAB THICKNESS (T) AND REINFORCEMENT.
2. SLAB REINFORCEMENT SHALL BE CHAIRED BY SOIL SUPPORTED SLAB BOLSTERS.
3. DO NOT USE THE KEY JOINT FOR SCREEDING.
4. BREAK BOND BETWEEN NEW AND PREVIOUSLY PLACED SLAB BY SPRAYING OR PAINTING EXPOSED SIDE OF KEY AND DOWEL WITH A CURING COMPOUND, ASPHALTIC EMULSION, OR FORM OIL.
5. REFER TO GENERAL NOTES, GENERAL SPECIFICATIONS, AND DRAWINGS FOR SUB-FLOOR DRAINAGE SYSTEM, SUBGRADE PREPARATION AND/OR MUD SLAB AND VAPOR BARRIER REQUIREMENTS.
6. SUBGRADE SHALL BE FREE OF STANDING WATER AT THE TIME OF CONCRETE PLACEMENT.
7. LONG STRIP CONSTRUCTION METHOD SHALL BE USED IN PLACING CONCRETE FOR ALL SLABS ON GRADE. SEE SCHEMATIC PLAN FOR CONCRETE PLACING SEQUENCE.

JOINT SPACING NOTE
1. PROVIDE CONTROL AND/OR CONSTRUCTION JOINTS AT EVERY COLUMN LINE AND IN BETWEEN THE COLUMN LINES SUCH THAT THE JOINT SPACING DOES NOT EXCEED 20 FEET UNLESS OTHERWISE SHOWN ON THE DRAWINGS. COORDINATE WITH ARCHITECTURAL DRAWINGS.

NOTE:
NON-CONDITIONED AREA SHALL REFER TO ANY LOCATION THAT CONTAINS A SLAB SUBJECTED TO TEMPERATURE VARIATIONS SIMILAR TO THE OUTSIDE AIR.

SAW CONTROL JOINT NOTES
1. MAKE SAW CUT AS SOON AS SLAB IS ABLE TO SUPPORT WEIGHT OF WORKERS AND SAWING EQUIPMENT WITHOUT DAMAGE TO FINISH SURFACE OF SLAB.
2. CLEAN JOINT PRIOR TO FILLING THE JOINT.

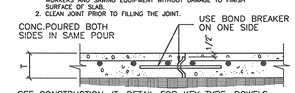


SEE CONSTRUCTION JT. DETAIL FOR KEY TYPE, DOWELS, REINFORCEMENT, BOND BREAKER, JT. EDGING DETAIL AND FILLER MATERIAL.

OPTIONAL CONTROL JOINT

JOINT FILLER MATERIAL NOTES
1. FILLER MATERIAL USED SHALL HAVE A MINIMUM SHORE A HARDNESS OF 35, AND SHALL CONFORM TO ASTM D2240. JOINT FILLER SHALL BE APPROVED BY ENGINEER PRIOR TO APPLICATION. APPROVED JOINT FILLER IS VULKEM 245 AS MANUFACTURED BY MAMECO INTERNATIONAL OR APPROVED EQUAL.
2. WHERE POSSIBLE, FILLER MATERIAL SHALL BE APPLIED WHEN BUILDING IS UNDER PERMANENT TEMPERATURE CONTROL. THIS SHALL BE EITHER AT THE END OF CONSTRUCTION OF THE COMPLETE BUILDING, OR A MINIMUM OF 90 DAYS AFTER SLAB CONSTRUCTION.
3. FOLLOW STRICTLY THE MANUFACTURERS RECOMMENDED PROCEDURES FOR APPLYING THE JOINT FILLER.

FORMED CONTROL JOINT NOTES
1. FORM CONTROL JOINTS BY INSERTING PREMOLDED STRIP INTO FRESH CONCRETE UNTIL TOP SURFACE OF STRIP IS FLUSH WITH SLAB SURFACE.
2. TOOL SLAB EDGES ROUND ON EACH SIDE OF INSERT.
3. AFTER CONCRETE HAS CURED, REMOVE INSERTS AND CLEAN GROOVE OF LOOSE DEBRIS.

DOWEL NOTES
1. ALL DOWELS SHALL CONFORM TO ASTM A615.
2. DOWELS SHALL BE CAREFULLY ALIGNED AND SUPPORTED DURING CONCRETING OPERATIONS.

CONSTRUCTION & CONTROL JOINTS SLAB ON GRADE

2 N.T.S. TYPICAL DETAIL

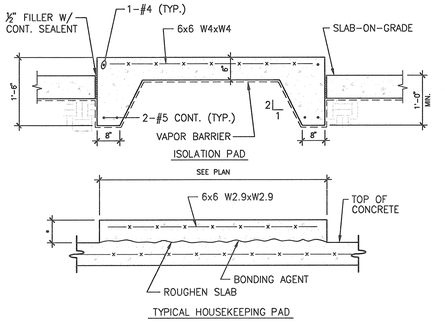


NOTE:
* CONTRACTOR TO COORDINATE w/ ARCHT'L & MEP DRWGS.

10 N.T.S. TYPICAL DETAIL

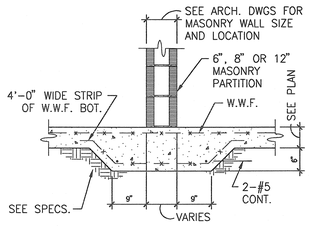


INTERIOR CMU WALL ON S.O.G.

9 N.T.S. TYPICAL DETAIL

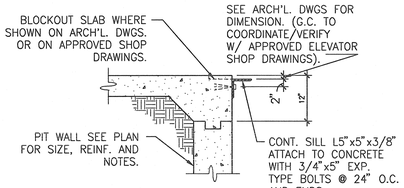


NOTES:
1. PROVIDE CONT. ELEVATOR SILL ANGLE AT THRESHOLD OF ELEVATOR PIT. SEE ARCHITECTURAL DRAWINGS FOR LOCATIONS.
2. INSTALL EXPANSION BOLTS ACCORDING TO MANUFACTURER'S REQUIREMENTS.

ELEVATOR PIT SILL ANGLE CONNX.

8 N.T.S. TYPICAL DETAIL

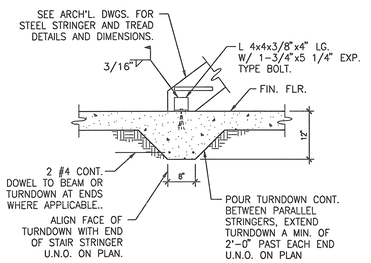


NOTES:
1. GENERAL CONTRACTOR IS RESPONSIBLE FOR THE COORDINATION OF STAIR STRINGER LOCATIONS WITH ARCH'L. DWGS. AND PROVIDE TURNDOWNS WHERE REQUIRED WHETHER SHOWN ON STRUCTURAL DRAWINGS OR NOT.
2. CLIP ANGLE TO BE HIDDEN BENEATH FIRST TREAD. WHERE OPEN RISERS ARE USED, COORDINATE THE LOCATION WITH THE ARCHITECT.
3. STEEL STAIRS ARE TO BE DESIGNED BY THE STAIR MFR. SEE SPEC'S.

SLAB-ON-GRADE TURNDOWN @ STEEL STAIR

7 N.T.S. TYPICAL DETAIL

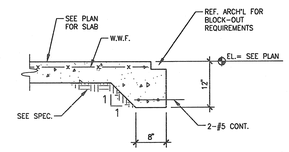


SLAB EDGE TURNDOWN

6 N.T.S. TYPICAL DETAIL

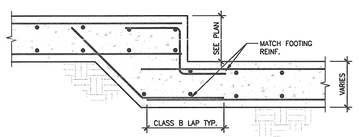


STEP IN FOOTING

15 3/4"=1'-0" TYPICAL DETAIL

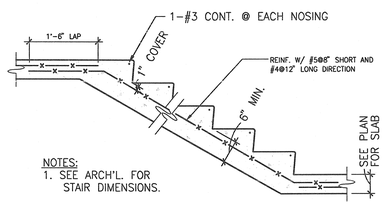


NOTES:
1. SEE ARCH'L. FOR STAIR DIMENSIONS.

TYPICAL EXTERIOR STAIR

14 3/4"=1'-0" DETAIL

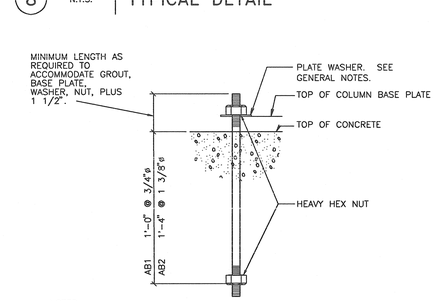


NOTES:
1. BOLT THREADS AT THE EMBEDDED END SHALL BE STRIKED AT TWO PLACES BELOW THE HEAVY HEX NUT.
2. UNLESS NOTED OTHERWISE, ALL BOLTS SHALL BE TIGHTENED TO A "SNUG TIGHT" CONDITION AS DEFINED BY AISC AFTER THE CONCRETE IS AT LEAST 14 DAYS OLD.
3. THE HOLE IN THE PLATE WASHER SHALL BE 1/16" LARGER THAN THE BOLT DIAMETER.

TYPE A ANCHOR BOLT

13 N.T.S. TYPICAL DETAIL

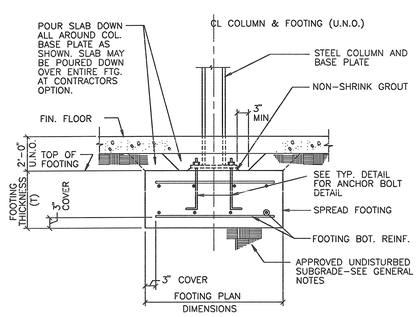


NOTE:
1. SEE SCHEDULES FOR COLUMN AND FOOTING SIZES AND REINFORCEMENT. IF NOT SCHEDULED, SEE PLAN OR DETAILS.
2. SEE PLAN FOR TOP OF FOOTING ELEVATIONS.

STEEL COLUMN ON SPREAD FOOTING

12 N.T.S. TYPICAL DETAIL

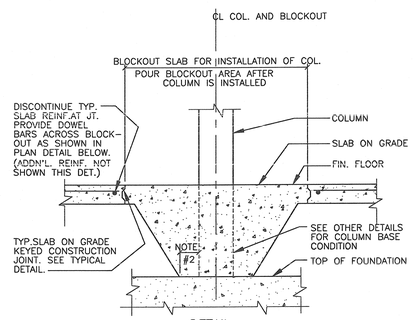


DETAIL

NOTE:
CONCRETE IN BLOCKOUT SHALL BE REINFORCED TO BE EQUIVALENT TO SPECIFIED PROJECT SLAB REINF. BUT MAXIMUM SPACING SHALL NOT EXCEED 12".

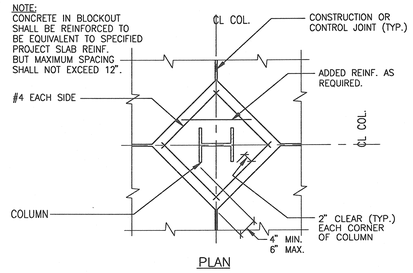


PLAN

NOTES:
1. GENERAL CONTRACTOR TO COORDINATE REQUIRED SIZE OF BLOCKOUT FOR STRUCTURAL STEEL COLUMNS WITH STEEL ERECTOR. SUBMIT THE DESIRED BLOCKOUT SIZE TO ARCHITECT FOR APPROVAL.
2. PROVIDE 3" MINIMUM CONCRETE COVER ALL AROUND COLUMN, FOR STEEL COVER, PROVIDE 3" MINIMUM COVER AROUND BASE PLATE.

SLAB-ON-GRADE BLOCKOUT AROUND COLUMNS

16 N.T.S. DETAIL

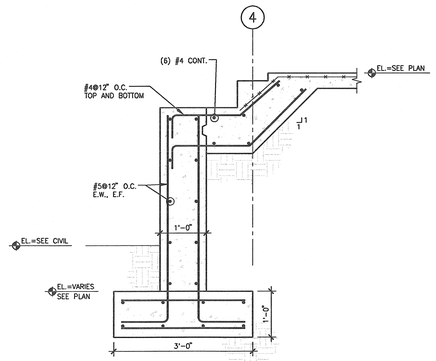


RETAINING WALL

20 3/4"=1'-0" SECTION

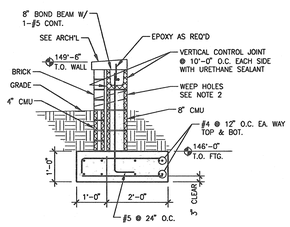


NOTES:
1. SEE CIVIL DWGS FOR LOCATIONS OF RETAINING WALLS.
2. COORD. LOCATION OF WEEP HOLES W/ ARCH'L (10'-0" O.C. MAX.)

SITE RETAINING WALL 2

19 1/2"=1'-0" TYPICAL DETAIL

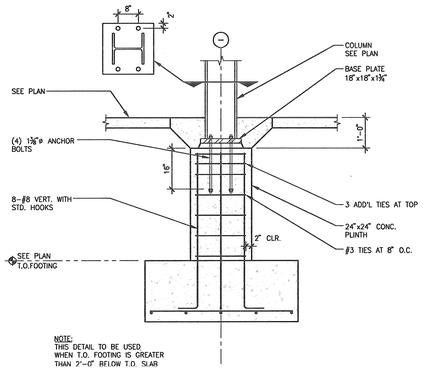


NOTE:
THIS DETAIL TO BE USED WHEN T.O. FOOTING IS GREATER THAN 2'-0" BELOW T.O. SLAB

CONCRETE PLINTH

18 1/2"=1'-0" TYPICAL DETAIL

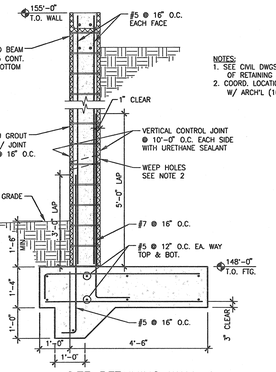


NOTES:
1. SEE CIVIL DWGS FOR LOCATIONS OF RETAINING WALLS.
2. COORD. LOCATION OF WEEP HOLES W/ ARCH'L (10'-0" O.C. MAX.)

SITE RETAINING WALL 1

17 1/2"=1'-0" TYPICAL DETAIL

M.E. RINKER, Sr. HALL
SCHOOL OF BUILDING CONSTRUCTION
UNIVERSITY OF FLORIDA-GAINESVILLE
PROJECT NO. BR-191


ARCHITECTS
CROXTON COLLABORATIVE/ GOULD EVANS ASSOCIATES

CROXTON COLLABORATIVE ARCHITECTS
475 FIFTH AVENUE
NEW YORK, NY 10017
TEL 212.683.1998
FAX 212.683.2799

GOULD EVANS ASSOCIATES
5405 WEST CYPRESS STREET
TAMPA, FL 33607
TEL 813.288.0729
FAX 813.288.0231

MECHANICAL ENGINEERS
LEHR ASSOCIATES
130 WEST 30TH STREET
NEW YORK, NY 10001-4092
TEL 212.947.8050
FAX 212.967.2059

STRUCTURAL ENGINEERS
WALTER P. MOORE AND ASSOCIATES, INC.
Florida Engineering Business No. 3818
201 EAST KENNEDY BOULEVARD
TAMPA, FL 33602
TEL 813.221.2424
FAX 813.221.2289

CIVIL ENGINEERS
BROWN & CULLEN, INC.
3530 NW 43 STREET
GAINESVILLE, FL 32605
TEL 352.375.8999
FAX 352.375.0633

LANDSCAPE ENGINEERS
McCLAIN DESIGN GROUP, INC.
1843 NW 39 DRIVE
GAINESVILLE, FL 32605
TEL 352.372.2808
FAX 352.375.6622

CONSULTANT
SEEGY-BISCH
AUSSERE SULZBACHER STR. 118
NURNBERG, GERMANY
TEL 0911/59 90 99
FAX 0911/59 98 05



THIS DRAWING, AS AN INSTRUMENT OF SERVICE, IS AND SHALL REMAIN PROPERTY OF CROXTON COLLABORATIVE ARCHITECTS. THIS DRAWING SHALL NOT BE REPRODUCED, PUBLISHED, USED ON OTHER PROJECTS, USED FOR ADDITIONS, OR USED IN COMPLETION OF THIS PROJECT BY OTHERS EXCEPT BY AGREEMENT IN WRITING. © 2001 CROXTON COLLABORATIVE ARCHITECTS/ GOULD EVANS ASSOCIATES.


| NO. | ISSUE/REVISION | DATE |
|---|---|---|

100% CONSTRUCTION DOCUMENTS

DRAWING NAME
TYPICAL FOUNDATION DETAILS

DATE 11-21-01
SCALE AS NOTED
DRAWN BY/CHECKED BY LMR/JLD
DRAWING NUMBER S5.0