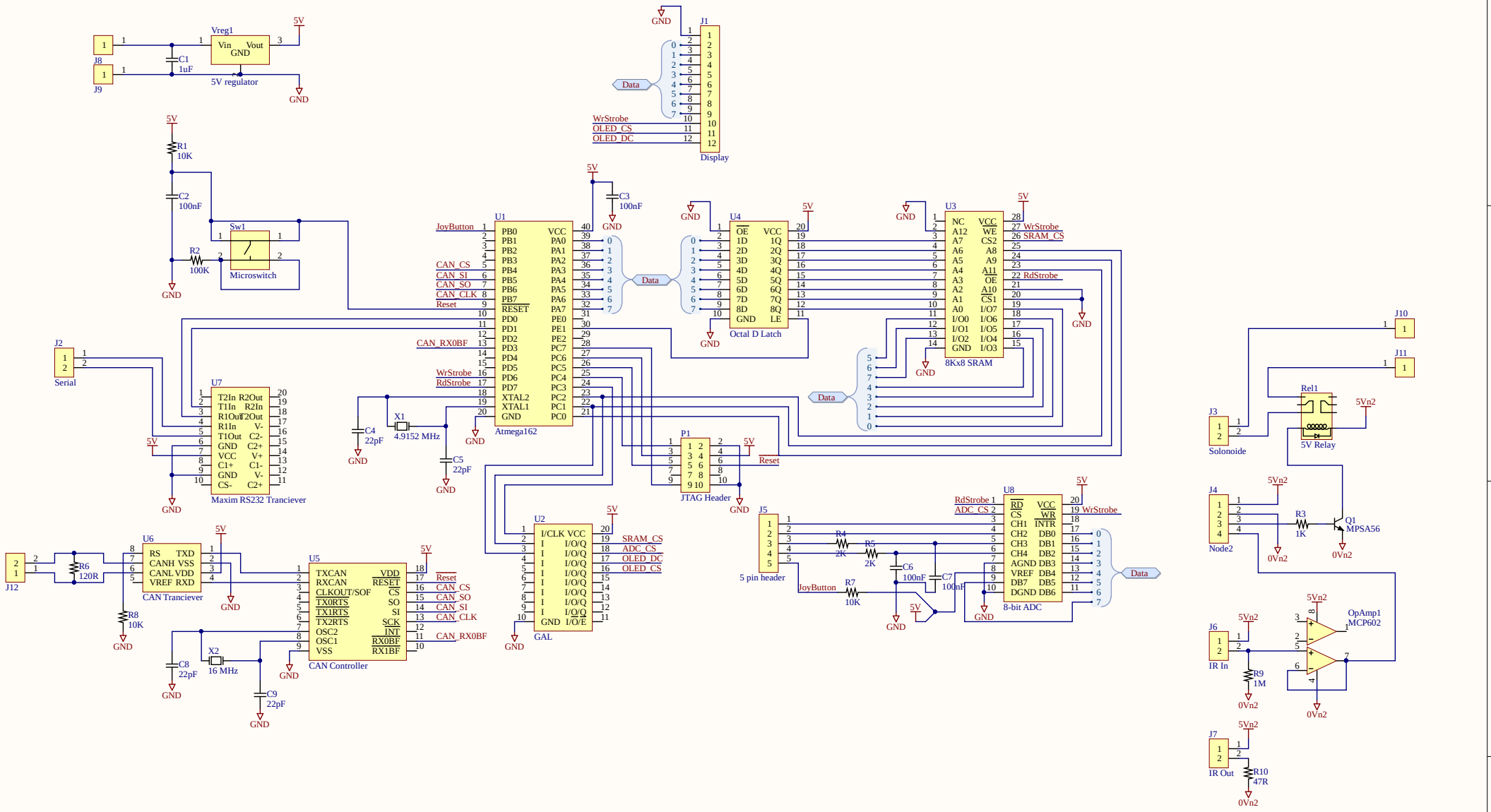

Title		
Size A3	Number	Revision
Date: 27.10.2017	Sheet of	
File: C:\Users\..\ByggernBreadbord.SchDoc	Drawn By:	

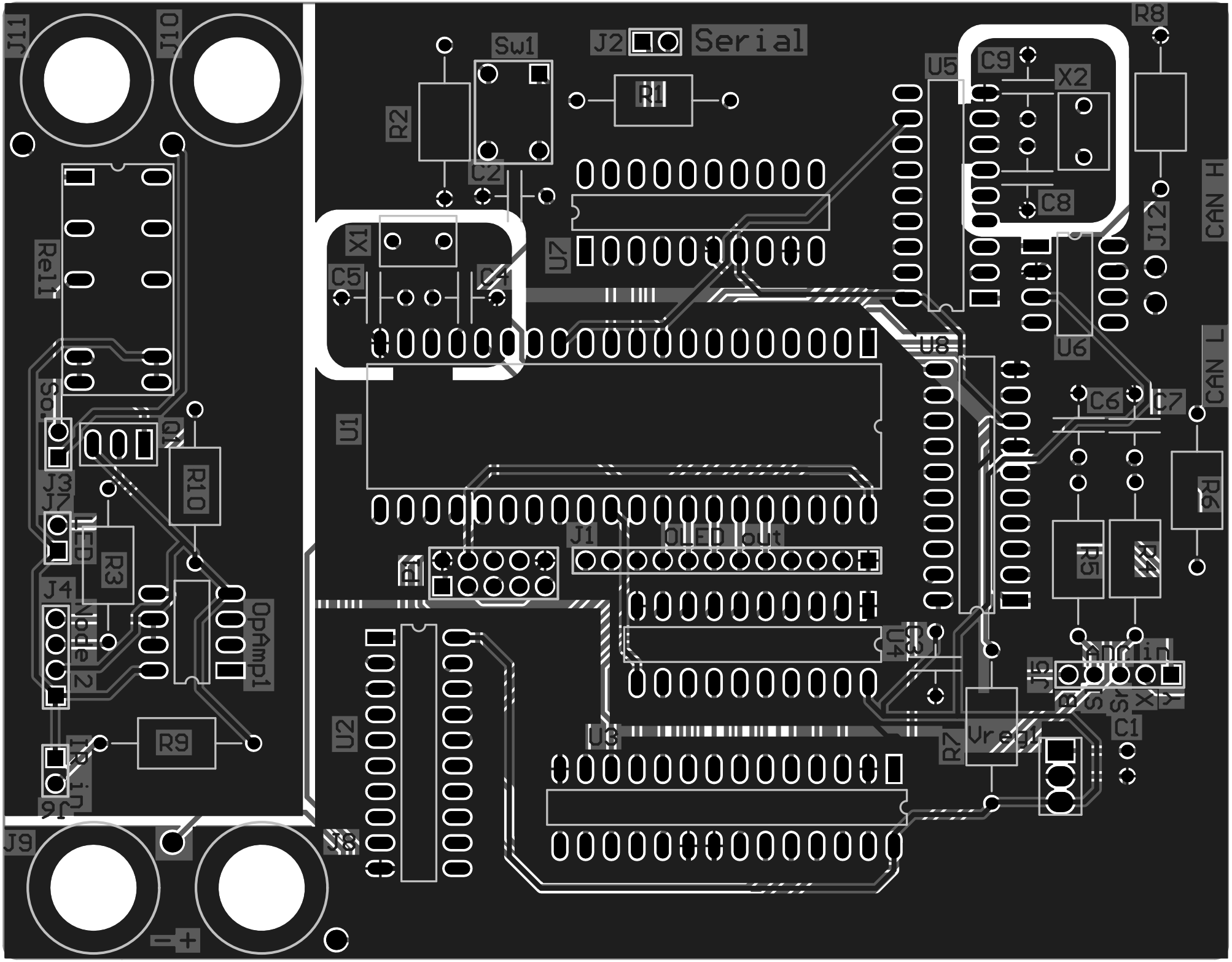
J11
J10
Sw1
J2
Serial
R1
R8
U5
C9
X2
R2
C2
C8
J12
CAN H
X1
U7
C5
C4
Rel1
U8
U6
CAN L
C6
C7
U1
Q1
R10
J3
J7
R6
J1
OLED out
R3
F1
R5
J4
Node 2
OpAmp1
U4
C3
J5
Vin
Vout
R7
Vreg1
C1
U2
U3
R9
J6
J8
J9
+
-